Expand Entertainment District to north curb line of R Street when approved by a Special Event Permit

'R' STREET

LEASABLE OUTDOOR AREA
6,540 S.F.

'R' STREET

10'-10" ENTRY / EXIT WIDTH

LEGEND

- LEASABLE BUILDING AREA
- COMMON OUTDOOR AREA
- LEASABLE OUTDOOR AREA
- PERMANENT FENCE
- MOVEABLE FENCE

LOFTS LEASABLE AREA
18,545 S.F.

Courtyard Commons Area
13,700 SF

ALLEY

HOTEL LEASABLE AREA
19,675 S.F.

14'-3" ENTRY EXIT WIDTH

CANOPY STREET

16'-0" ENTRY/ EXIT WIDTH

Railyard Commons Area
13,620 S.F.

RAIL YARD LEASABLE AREA - NORTH BUILDING
11,400 S.F.

7TH STREET

16'-0" ENTRY/ EXIT WIDTH

RAIL YARD LEASABLE AREA - SOUTH BUILDING
7,290 S.F.

16'-0" ENTRY/ EXIT WIDTH

Entertainment District
-south curb line of R Street
- mid line of 7th
- midline of Q St
- 1' off property line on Alley

NOTE: ALL OTHER FENCE OPENINGS ARE AT 8'-0" U.N.O.

'Q' STREET

'Q' STREET

LEASABLE OUTDOOR AREA
1830 S.F.

N

1 FIRST FLOOR
1" = 60'-0"

architects, pc
720 'O' Street, Lot F
Lincoln, NE 68508
p 402 477 2404
f 402 477 2388
www.EncompassArch.com

© Copyright Encompass Architects

THE RAILYARD

TRACTION DEVELOPMENT PARTNERS

CANOPY STREET & 'R' STREET
LINCOLN, NE

Project No. 12-1500

Issue Date: 05/22/13

Amended Attachment B:
Amended Entertainment District 7/25/2016

Railyard Promotional Associates
Entertainment District

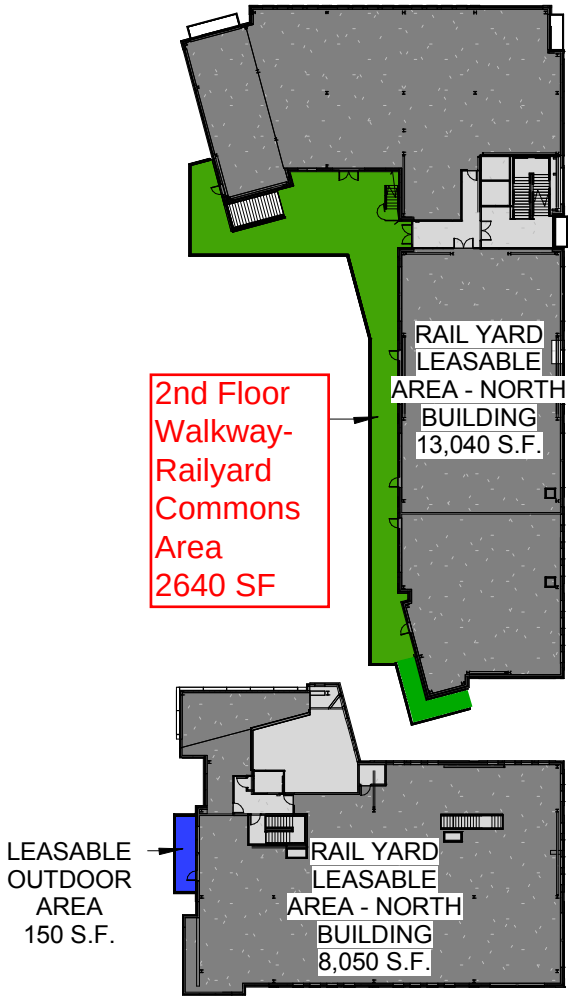

1 RAIL YARD SECOND FLOOR
1" = 60'-0"

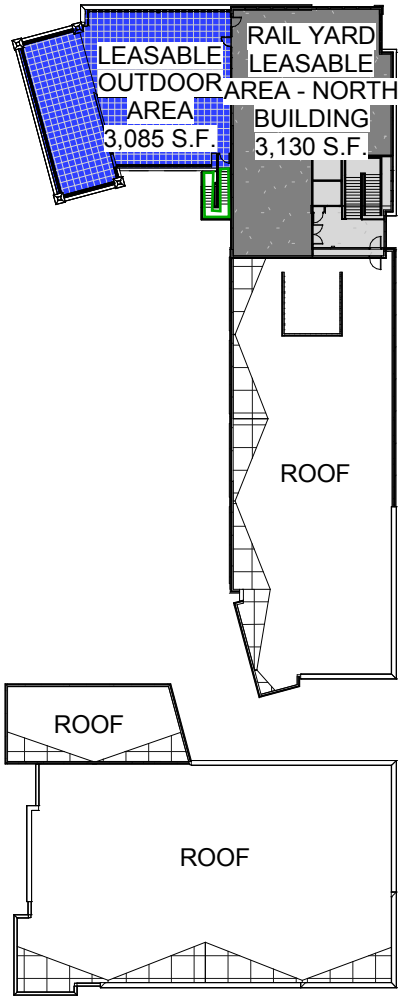

2 RAIL YARD THIRD FLOOR
1" = 60'-0"

LEGEND

- LEASABLE BUILDING AREA
- COMMON OUTDOOR AREA
- LEASABLE OUTDOOR AREA
- PERMANENT FENCE
- MOVEABLE FENCE

N

ENCOMPASS
architects, pc
720 'O' Street, Lot F
Lincoln, NE 68508
p 402 477 2404
f 402 477 2388
www.EncompassArch.com

© Copyright Encompass Architects

THE RAILYARD

TRACTION DEVELOPMENT PARTNERS

CANOPY STREET & 'R' STREET
LINCOLN, NE

Project No. 12-1500

Issue Date: 05/22/13

Railyard Promotional Associates
Entertainment District

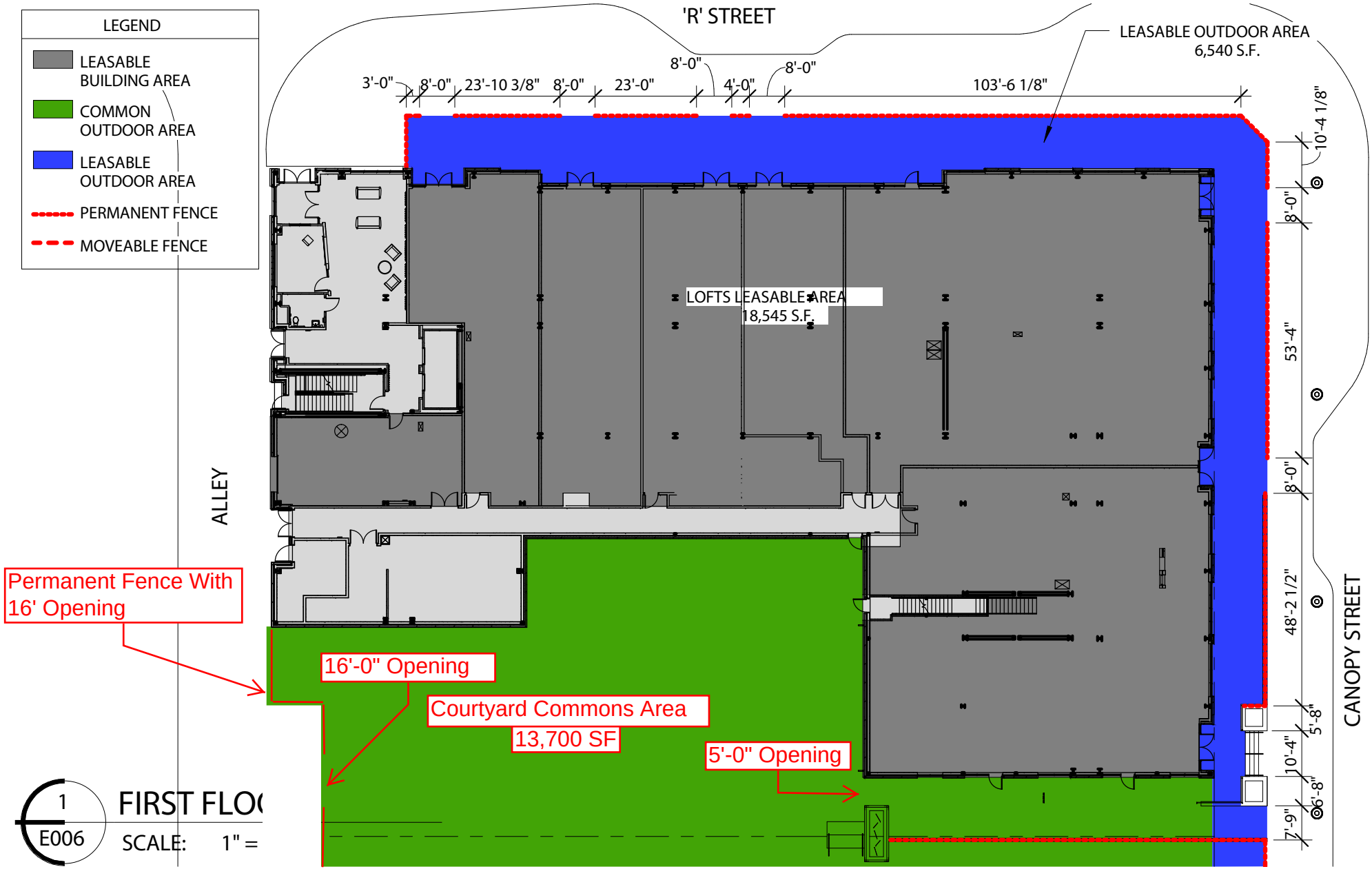

architects, pc
720 'O' Street, Lot F
Lincoln, NE 68508
p 402 477 2404
f 402 477 2388
www.EncompassArch.com

© Copyright Encompass Architects

THE RAILYARD

TRACTION DEVELOPMENT PARTNERS

CANOPY STREET & 'R' STREET
LINCOLN, NE

Project No. 12-1500

Issue Date: 05/23/13

CANOPY ST. LOFTS

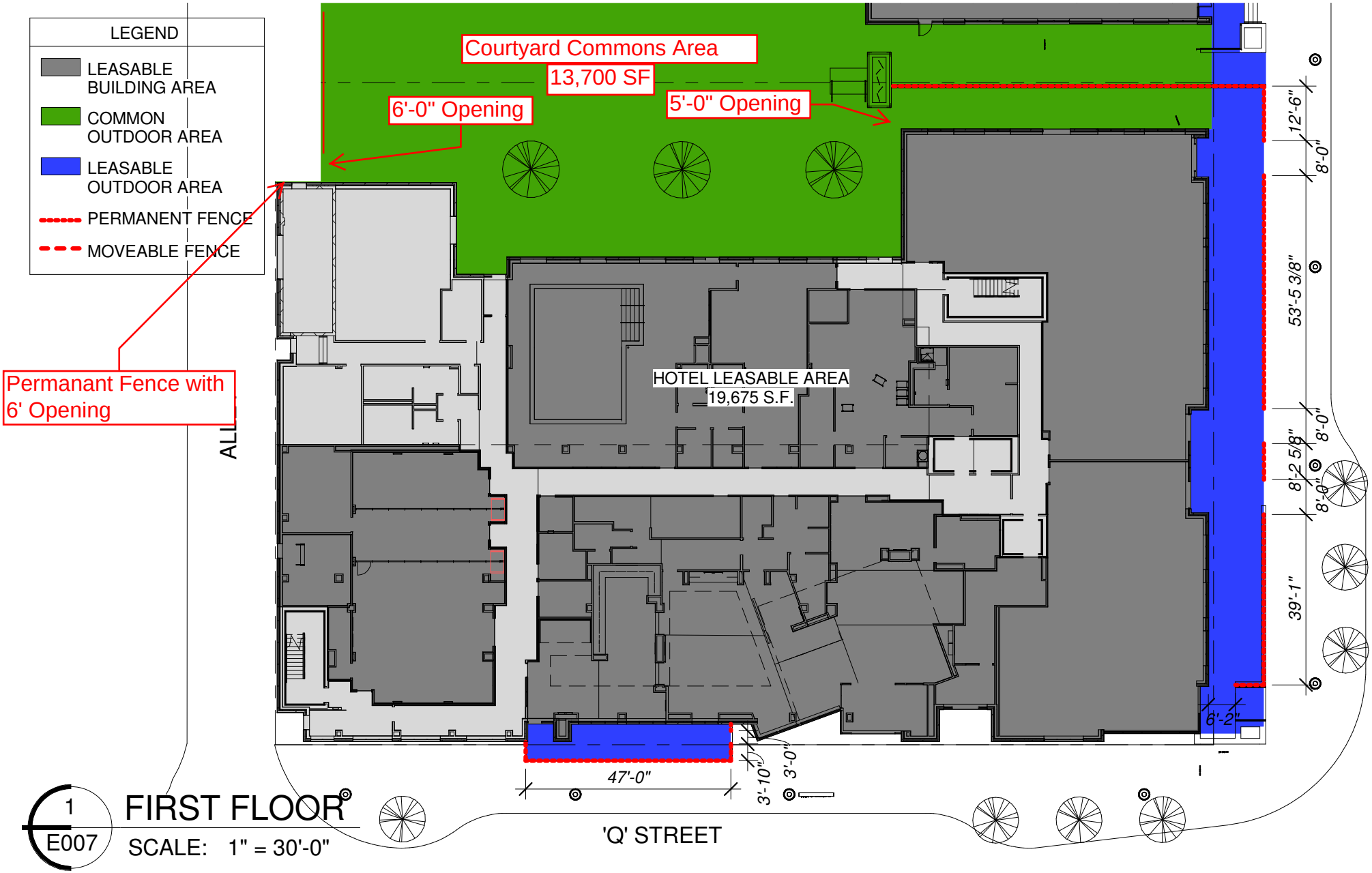

1
E007

FIRST FLOOR

SCALE: 1" = 30'-0"

ENCOMPASS architects, pc
720 'O' Street, Lot F
Lincoln, NE 68508
p 402 477 2404
f 402 477 2388
www.EncompassArch.com

© Copyright Encompass Architects

THE RAILYARD

TRACTION DEVELOPMENT PARTNERS

CANOPY STREET & 'R' STREET
LINCOLN, NE

Project No. 12-1500

Issue Date: 05/23/13

HOTEL

LEGEND

- LEASABLE BUILDING AREA
- COMMON OUTDOOR AREA
- LEASABLE OUTDOOR AREA
- PERMANENT FENCE
- MOVEABLE FENCE

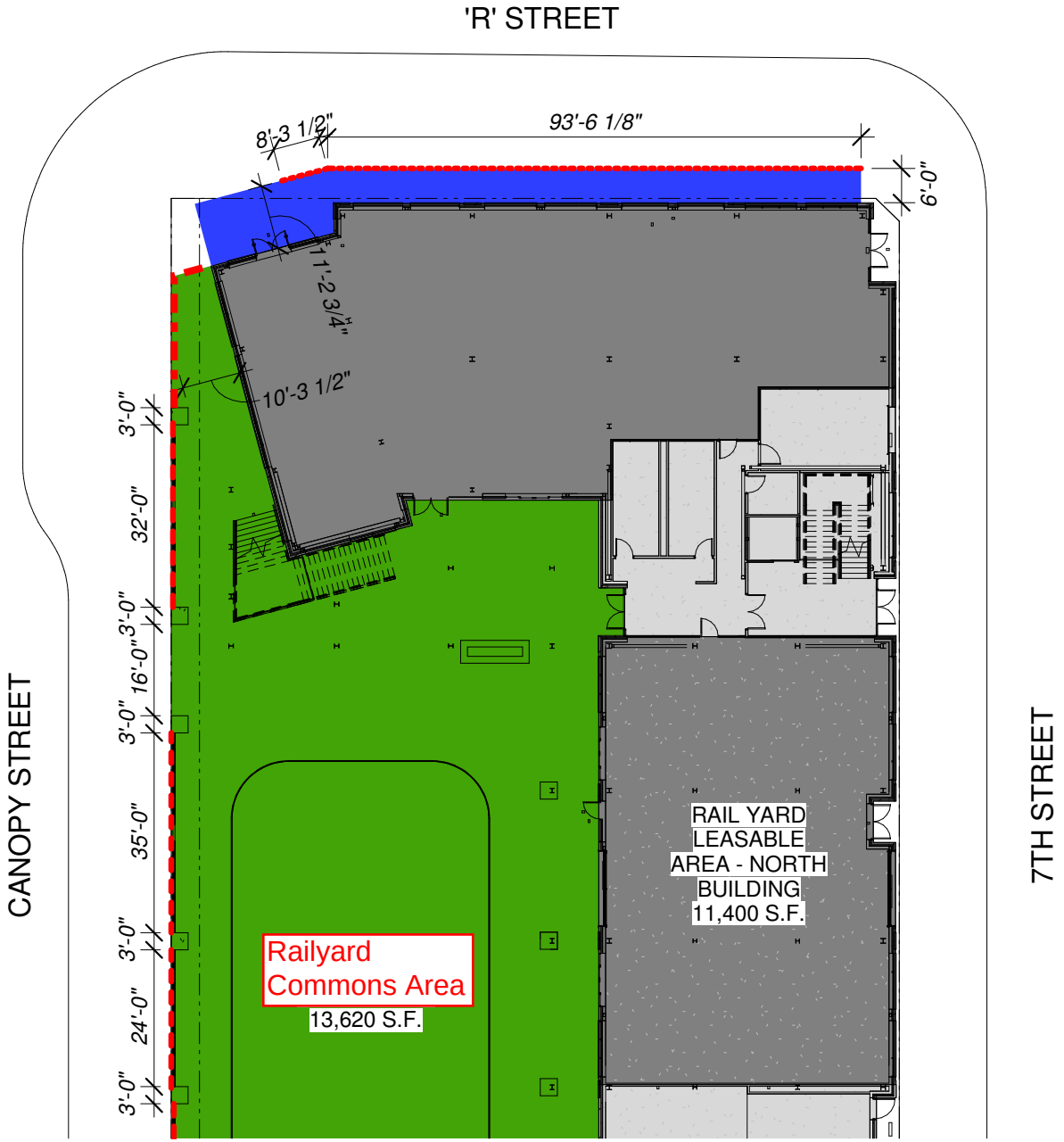

1
E008

FIRST FLOOR

SCALE: 1" = 30'-0"

ENCOMPASS architects, pc
720 'O' Street, Lot F
Lincoln, NE 68508
p 402 477 2404
f 402 477 2388
www.EncompassArch.com

© Copyright Encompass Architects

THE RAILYARD

TRACTION DEVELOPMENT PARTNERS

CANOPY STREET & 'R' STREET
LINCOLN, NE

Project No. 12-1500

Issue Date: 05/23/13

RAIL YARD NORTH

LEGEND

- LEASABLE BUILDING AREA
- COMMON OUTDOOR AREA
- LEASABLE OUTDOOR AREA
- PERMANENT FENCE
- MOVEABLE FENCE

1
E009

FIRST FLOOR

SCALE: 1" = 30'-0"

ENCOMPASS architects, pc
720 'O' Street, Lot F
Lincoln, NE 68508
p 402 477 2404
f 402 477 2388
www.EncompassArch.com

© Copyright Encompass Architects

THE RAILYARD

TRACTION DEVELOPMENT PARTNERS

CANOPY STREET & 'R' STREET
LINCOLN, NE

Project No. 12-1500

Issue Date: 05/23/13

RAIL YARD SOUTH

AREA CALCULATIONS			
	LEASABLE BUILDING AREA	COMMON OUTDOOR AREA	LEASABLE OUTDOOR AREA
RAIL YARD			
NORTH BUILDING			
FIRST FLOOR	11,400 SF	13,620 SF	1,830 SF
SECOND FLOOR	13,040 SF	2,640 SF	--
THIRD FLOOR	3,130 SF	--	3,085 SF
SOUTH BUILDING			
FIRST FLOOR	7,290 SF	--	--
SECOND FLOOR	8,050 SF	--	150 SF
HOTEL			
FIRST FLOOR	19,675 SF	14,890 SF	6,540 SF
LOFTS			
FIRST FLOOR	18,545 SF	--	--
TOTAL	81,130 SF	31,150 SF	11,605 SF

ENCOMPASS
architects, pc
720 'O' Street, Lot F
Lincoln, NE 68508
p 402 477 2404
f 402 477 2388
www.EncompassArch.com

© Copyright Encompass Architects

THE RAILYARD

TRACTION DEVELOPMENT PARTNERS

CANOPY STREET & 'R' STREET
LINCOLN, NE

Project No. 12-1500

Issue Date: 05/22/13

ENTERTAINMENT DISTRICT
APPLICATION

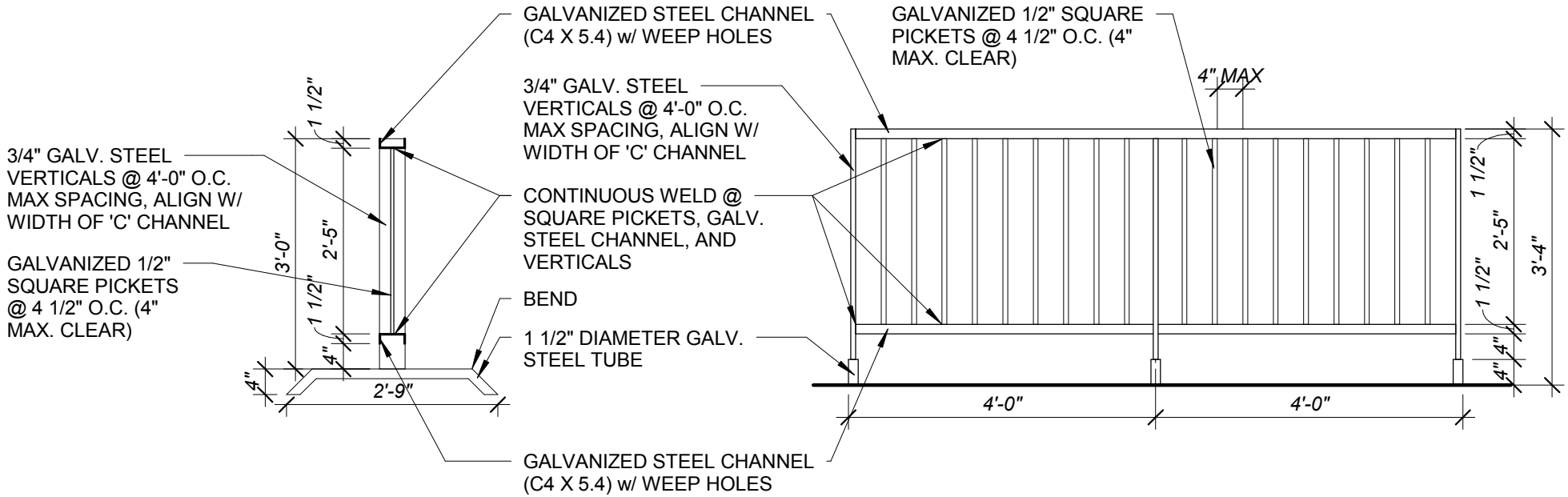

1 MOVEABLE FENCE DETAILS
1/2" = 1'-0"

ENCOMPASS architects, pc
720 'O' Street, Lot F
Lincoln, NE 68508
p 402 477 2404
f 402 477 2388
www.EncompassArch.com

© Copyright Encompass Architects

THE RAILYARD
TRACTION DEVELOPMENT PARTNERS
CANOPY STREET & 'R' STREET
LINCOLN, NE
Project No. 12-1500
Issue Date: 05/22/13

ENTERTAINMENT DISTRICT APPLICATION

NOTE:
GALVANIZE ENTIRE ASSEMBLY

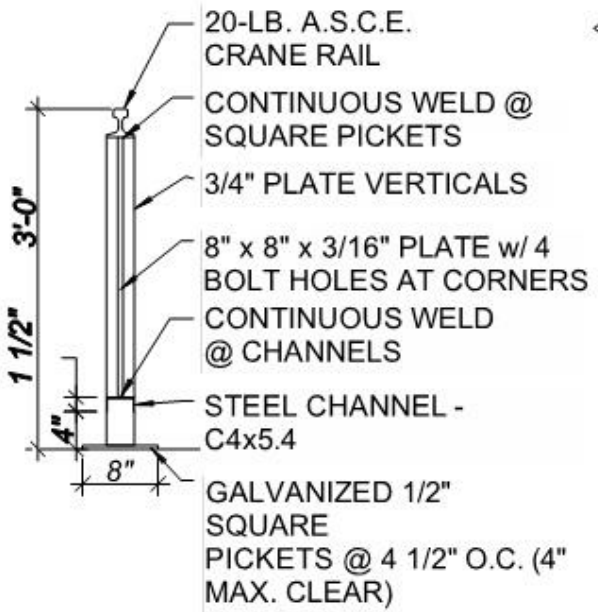

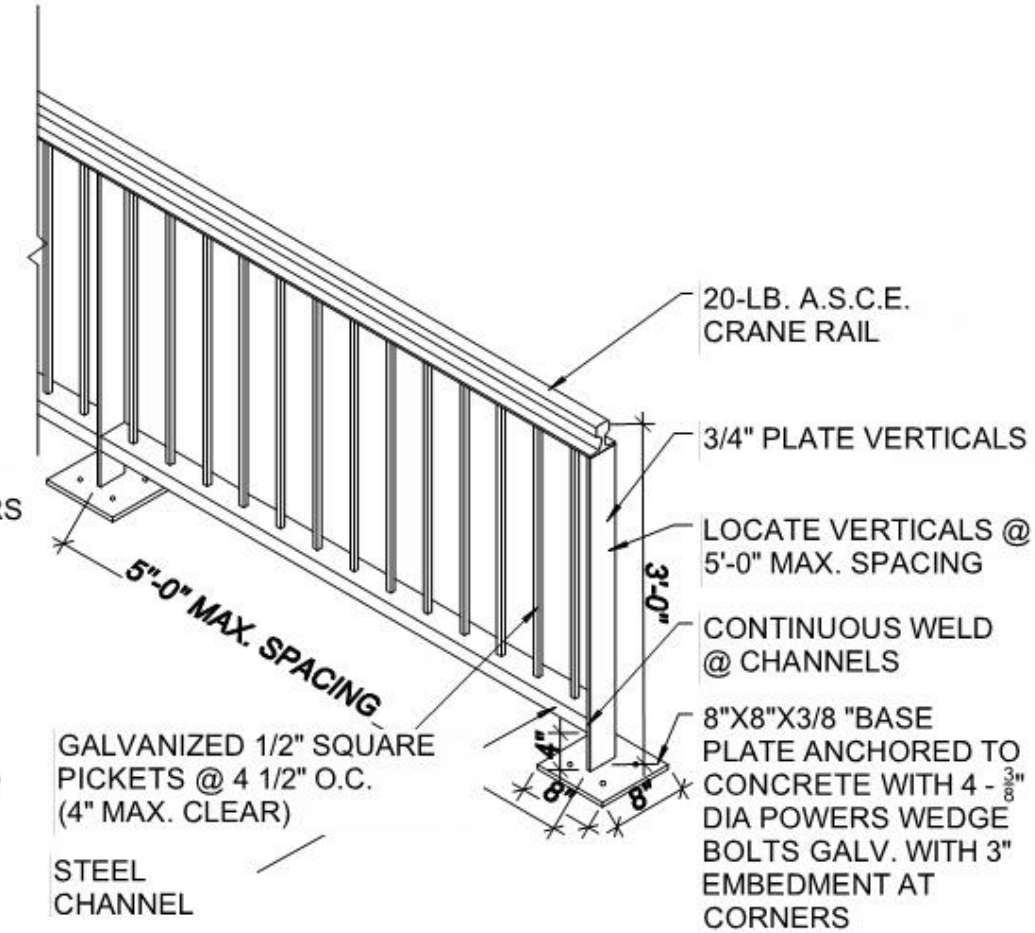

1 PERMANENT FENCE DETAILS
NO SCALE

DRAWING COURTESY OF THE CLARK ENERSEN PARTNERS

ENCOMPASS architects, pc
720 'O' Street, Lot F
Lincoln, NE 68508
p 402 477 2404
f 402 477 2388
www.EncompassArch.com

© Copyright Encompass Architects

THE RAILYARD
TRACTION DEVELOPMENT PARTNERS
CANOPY STREET & 'R' STREET
LINCOLN, NE
Project No. 12-1500
Issue Date: 05/22/13

ENTERTAINMENT DISTRICT APPLICATION