ADDENDUM NO. 1

40TH STREET & YANKEE HILL ROAD PAVING PROJECT 701596
SPEC. NO. 04-182

TO ALL PROSPECTIVE BIDDERS:
The quantities and special provisions for the above referenced project are hereby amended to include the following items:

1. The completion date listed in the "Notice to Bidders" was June 15, 2004. This date should be June 15, 2005.

2. Plans to construct a Box Culvert Pedestrian Underpass have been included with this addendum.

3. Replace the Bid Item List with the Revised Bid Item List.

4. Replace the Summary of Quantities Sheet 2 with the Revised Summary of Quantities Sheet 2.

5. Replace the Water Main Profile Sheet 90 with the Revised Water Main Profile Sheet 90.

6. Signed Revision Sheets will be supplied to the successful bidder.

PROFESSIONAL CIVIL ENGINEER
KENT E. EVANS
E-9875
7/16/04
STATE OF NEBRASKA

Schedule of Items

Contract ID: 701596 Project(s):
Letting Date: 07-21-04 Call Order: 001

Bidder:

Line No.	Item Description	Approx. Quantity and Units	Unit Price Dollars	Unit Price Cts	Bid Amount Dollars	Bid Amount Ct
Section 0001						
	Alt Group					
0005	01.0100 Pavement & Sidewalk Removal	681.000 C.Y.				
0010	01.0140 Asph. Conc. Surface Course, For Arterial Street	1,828.000 Ton				
0015	01.0190 Standard Monument Box (In Place)	3.000 Ea.				
0020	02.0010 General Clearing & Grubbing	1.000 L.S.				
0025	50.0040 Misc. 9" Doweled Port. Cement Conc. Pav't. W/I	25,777.000 S.Y.				
0030	06.0060 Concrete Median Surfacing, 4" Thick	12,118.000 S.F.				
0035	10.0010 Crushed Rock Surfacing (In Place)	98.000 Ton				
0040	07.0020 Concrete Sidewalk, 4" Thick	31,346.000 S.F.				
0045	50.0045 Misc. Retaining Wall, Stone Strong System or E	2,600.000 S.F.				

Schedule of Items

Contract ID: 701596 Project(s):
Letting Date: 07-21-04 Call Order: 001

Bidder:

Line No.	Item Description	Approx. Quantity and Units	Unit Price Dollars	Unit Price Cts	Bid Amount Dollars	Bid Amount Ct
0050	02.0020 Tree Removal (12" to 23")	13.000 Ea.				
0055	02.0030 Tree Removal (24" to 35")	1.000 Ea.				
0060	06.0050 Concrete Median Nose, (In Place)	8.000 Ea.				
0065	06.0020 Combined Curb & Gutter	570.000 L.F.				
0070	50.0045 Misc. Detectable Warning Panels	120.000 S.F.				
0075	02.0110 Earth Borrow Measured in Embankment (E.Q.)	23,799.000 C.Y.				
0080	07.0045 Concrete Bikeway, 5" Thick	4,120.000 S.F.				
0085	01.0210 Type "A" Sawing	35.000 L.F.				
0090	13.0275 Paint Marking, 4" White	1,326.000 L.F.				
0095	13.0280 Paint Marking, 8" White	4,837.000 L.F.				

Schedule of Items

Contract ID: 701596 Project(s):
Letting Date: 07-21-04 Call Order: 001

Bidder:

Line No.	Item Description	Approx. Quantity and Units	Unit Price Dollars	Unit Price Cts	Bid Amount Dollars	Bid Amount Ct
0100	13.0305 Paint Marking, 12" White	1,269.000 L.F.				
0105	13.0270 Paint Marking, 4" Yellow	3,686.000 L.F.				
0110	50.0001 Misc. Tubular Markers, White	8.000 Ea.				
0115	24.0807 Pull Box Type PB-9	11.000 Ea.				
0120	24.0810 Pull Box, Type FOR27	10.000 Ea.				
0125	24.0900 Conduit In Trench, 1/2 Inch	73.000 L.F.				
0130	24.0903 Conduit in Trench, 1-1/2 Inch	3,694.000 L.F.				
0135	24.0904 Conduit in Trench, 2 Inch	2,450.000 L.F.				
0140	24.0905 Conduit in Trench, 3 Inch	74.000 L.F.				
0145	24.0906 Conduit in Trench, 4 Inch	3,179.000 L.F.				

Schedule of Items

Contract ID: 701596 Project(s):
Letting Date: 07-21-04 Call Order: 001

Bidder:

Line No.	Item Description	Approx. Quantity and Units	Unit Price Dollars	Unit Price Cts	Bid Amount Dollars	Bid Amount Ct
0150	24.1049 Tracer Wire No. 14 THHN	6,441.000 L.F.				
0155	24.1072 Street Light Cable, No. 4 USE in Conduit	1,536.000 L.F.				
0160	24.1073 Street Light Cable, No. 6 USE In Conduit	768.000 L.F.				
0165	24.1380 Ground Rod, 10'	11.000 Ea.				
0170	24.1194 Detector, Vehicle Magnetic	6.000 Ea.				
0175	24.1690 Detector, Vehicle 4 Turns	23.000 Ea.				
0180	24.1476 Street Light Pole, Type SL-A-C-50-12T-5	4.000 Ea.				
0185	24.1481 Street Light Pole, Type SL-A-PI-50-12T-5	2.000 Ea.				
0190	24.6021 Install Locate Stick	1.000 Ea.				
0195	32.0040 Synthetic Fabric Silt Fence Installation	2,020.000 L.F.				

Schedule of Items

Contract ID: 701596 Project(s):
Letting Date: 07-21-04 Call Order: 001

Bidder:

Line No.	Item Description	Approx. Quantity and Units	Unit Price Dollars	Unit Price Cts	Bid Amount Dollars	Bid Amount Ct
0200	32.0050 Synthetic Fabric Silt Fence Maintenance	2,020.000 L.F.				
0205	32.0060 Synthetic Fabric Silt Fence Removal	2,020.000 L.F.				
0210	50.0005 Misc. Triangular Silt Dike Installation	63.000 L.F.				
0215	50.0005 Misc. Triangular Silt Dike Maintenance	63.000 L.F.				
0220	50.0005 Misc. Triangular Silt Dike Removal	63.000 L.F.				
0225	30.0090 Seeding, Type "D"	13.800 Ac.				
0230	30.0140 Seeding, Type "F"	0.300 Ac.				
0235	32.0070 Install Storm Drain Inlet Protection Type I	2.000 Ea.				
0240	32.0080 Storm Drain Inlet Protection Maintenance Type I	2.000 Ea.				
0245	32.0090 Remove Storm Drain Inlet Protection Type I	2.000 Ea.				

Schedule of Items

Contract ID: 701596 Project(s):
Letting Date: 07-21-04 Call Order: 001

Bidder:

Line No.	Item Description	Approx. Quantity and Units	Unit Price Dollars	Unit Price Cts	Bid Amount Dollars	Bid Amount Ct
0250	50.0005 Misc. Install Storm Drain Inlet Protection (Ty	100.000 L.F.				
0255	50.0005 Misc. Storm Drain Inlet Protection Maint. (Typ	100.000 L.F.				
0260	50.0005 Misc. Remove Storm Drain Inlet Protection (Typ	100.000 L.F.				
0265	32.0100 Silt Fence Culvert Inlet Protection	86.000 L.F.				
0270	32.0110 Silt Fence Culvert Inlet Protection Maintenance	86.000 L.F.				
0275	32.0120 Silt Fence Culvert Inlet Protection Removal	86.000 L.F.				
0280	50.0045 Misc. Sheetpile Ditch Check Installation	367.000 S.F.				
0285	50.0040 Misc. Install Type I Erosion Control Mat	6,570.000 S.Y.				
0290	50.0040 Misc. Install Type II Erosion Control Mat	78.000 S.Y.				
0295	50.0040 Misc. Install Type III Erosion Control Mat	632.000 S.Y.				

Schedule of Items

Contract ID: 701596 Project(s):
Letting Date: 07-21-04 Call Order: 001

Bidder:

Line No.	Item Description	Approx. Quantity and Units	Unit Price Dollars	Unit Price Cts	Bid Amount Dollars	Bid Amount Ct
0300	21.0070 36" R.C.P. Storm Sewer, Class III	613.000 L.F.				
0305	21.0080 30" R.C.P. Storm Sewer, Class III	767.000 L.F.				
0310	21.0090 24" R.C.P. Storm Sewer, Class III	48.000 L.F.				
0315	21.0100 18" R.C.P. Storm Sewer, Class III	102.000 L.F.				
0320	21.0110 15" R.C.P. Storm Sewer, Class III	368.000 L.F.				
0325	21.0780 72" Canted Storm Sewer Inlet (Complete)	10.000 Ea.				
0330	21.0890 Storm Sewer Manhole, to 36" (Complete)	2.000 Ea.				
0335	21.0895 Storm Sewer Manhole, 15" - 30" (Complete)	3.000 Ea.				
0340	21.1750 Remove Existing Headwall (Complete)	2.000 Ea.				
0345	21.0830 Grate Inlet, Type "F-2" (Complete)	2.000 Ea.				

Schedule of Items

Contract ID: 701596 Project(s):
Letting Date: 07-21-04 Call Order: 001

Bidder:

Line No.	Item Description	Approx. Quantity and Units	Unit Price Dollars	Unit Price Cts	Bid Amount Dollars	Bid Amount Ct
0350	21.0095 21" R.C.P. Storm Sewer, Class III	496.000 L.F.				
0355	50.0001 Misc. Reinf. Conc. Outlet Structure, Complete	1.000 Ea.				
0360	50.0005 Misc. Remove & Relay Corrugated Metal Pipe Cul	92.000 L.F.				
0365	50.0005 Misc. Remove Existing Corrugated Metal Pipe Cu	155.000 L.F.				
0370	23.0010 36" D.I. Pipe Water Main, Cl 52 (Polywrapped)	131.000 L.F.				
0375	23.0020 30" D.I. Pipe Water Main, Cl 52 (Polywrapped)	5,708.000 L.F.				
0380	23.0030 24" D.I. Pipe Water Main, Cl 52 (Polywrapped)	2,988.000 L.F.				
0385	23.0050 16" D.I. Pipe Water Main, Cl 52 (Polywrapped)	2,921.000 L.F.				
0390	23.0070 8" D.I. Pipe Water Main, Cl 52 (Polywrapped)	98.000 L.F.				
0395	23.0080 6" D.I. Pipe Water Main, Cl 52 (Polywrapped)	60.000 L.F.				

Schedule of Items

Contract ID: 701596 Project(s):
Letting Date: 07-21-04 Call Order: 001

Bidder:

Line No.	Item Description	Approx. Quantity and Units	Unit Price Dollars	Unit Price Cts	Bid Amount Dollars	Bid Amount Ct
0400	50.0001 Misc. 36" Butterfly Valve, M.J.	2.000 Ea.				
0405	50.0001 Misc. 30" Butterfly Valve, M.J.	6.000 Ea.				
0410	23.0400 24" Butterfly Valve, M.J.	4.000 Ea.				
0415	23.0420 16" Butterfly Valve, M.J.	4.000 Ea.				
0420	23.0460 6" Gate Valve, M.J.	33.000 Ea.				
0425	23.0490 Hydrant, Complete L=5.5'	30.000 Ea.				
0430	23.0540 24" X 45 Deg. Bend, M.J.	2.000 Ea.				
0435	50.0001 Misc. 30" x 11.25^ Bend, M.J.	4.000 Ea.				
0440	50.0001 Misc. 30" x 6" Tee, M.J.	15.000 Ea.				
0445	23.0570 24" X 6" Tee, M.J.	7.000 Ea.				

Schedule of Items

Contract ID: 701596 Project(s):
Letting Date: 07-21-04 Call Order: 001

Bidder:

Line No.	Item Description	Approx. Quantity and Units	Unit Price Dollars	Unit Price Cts	Bid Amount Dollars	Bid Amount Ct
0450	50.0001 Misc. 16" x 8" Tee, M.J.	1.000 Ea.				
0455	23.0576 16" X 6" Tee, M.J.	8.000 Ea.				
0460	23.0582 6" X 6" Tee, M.J.	3.000 Ea.				
0465	23.0592 6" Anchoring Elbow, M.J.	29.000 Ea.				
0470	23.0594 6" Anchoring Coupling, M.J. (L=18")	30.000 Ea.				
0475	50.0001 Misc. 36" x 36" Cross, M.J.	1.000 Ea.				
0480	50.0001 Misc. 30" x 16" Cross, M.J.	1.000 Ea.				
0485	50.0001 Misc. 36" x 30" Reducer, M.J.	1.000 Ea.				
0490	50.0001 Misc. 36" x 24" Reducer, M.J.	1.000 Ea.				
0495	50.0001 Misc. 24" Solid Sleeve, M.J. (L=24")	1.000 Ea.				

Schedule of Items

Contract ID: 701596 Project(s):
Letting Date: 07-21-04 Call Order: 001

Bidder:

Line No.	Item Description	Approx. Quantity and Units	Unit Price Dollars	Unit Price Cts	Bid Amount Dollars	Bid Amount Ct
0500	50.0001 Misc. 16" Dual Purpose Sleeve, M.J.	1.000 Ea.				
0505	50.0001 Misc. 36" Plug, M.J.	1.000 Ea.				
0510	50.0001 Misc. 30" Plug, M.J.	2.000 Ea.				
0515	23.0658 16" Plug, M.J.	1.000 Ea.				
0520	23.0662 6" Plug, M.J.	3.000 Ea.				
0525	23.0665 Conc. for Thrust Blocks & Anchorages (In Place)	1.000 C.Y.				
0530	50.0001 Misc. 24" Air Relief Valve in Manhole, (Comple	2.000 Ea.				
0535	50.0001 Misc. 30" Air Relief Valve in Manhole, (Comple	1.000 Ea.				
0540	23.0960 Remove & Salvage Hydrant (Complete)	2.000 Ea.				
0545	23.0970 Remove & Salvage Plug	1.000 Ea.				

Schedule of Items

Contract ID: 701596 Project(s):
Letting Date: 07-21-04 Call Order: 001

Bidder:

Line No.	Item Description	Approx. Quantity and Units	Unit Price Dollars	Unit Price Cts	Bid Amount Dollars	Bid Amount Ct
0550	23.0653 8" Dual Purpose Sleeve, M.J. (L=12")	1.000 Ea.				
0555	50.0001 Misc. 2" Plug, M.J.	1.000 Ea.				
0560	50.0005 Misc. 42" Smooth Steel Casing, 0.500" Thick, B	40.000 L.F.				
0565	23.1000 Remove & Salvage Gate Valve and Box (Complete)	2.000 Ea.				
0570	24.6999 Mobilizatio n	1.000 L.S.				
0575	50.0015 Misc. Traffic Control	1.000 L.S.				
0580	50.0015 Misc. Construction Staking	1.000 L.S.				
	Section 0001 Total					
	Bid Total					

USER: SICMH
DATE: Friday, July 16, 2004
DGN: ...\Sheets\General\701596SCnA.dgn

CITY OF LINCOLN NEBRASKA	PROJECT NO.	SHEET NO.
	701596	2
	Date: 06-28-04	Drawn: JRD
	Horz. Scale 1 :	Checked:
		Approved:

117-B-49

PAVING ITEMS

1.0100	PAVEMENT & SIDEWALK REMOVAL	CU. YD.	777
1.0140	ASPHALTIC CONCRETE SURFACE COURSE, FOR ARTERIAL STREETS, 7" THICK	TON	2008
1.0020	ASPHALTIC CONCRETE PAVEMENT, CLASS I (6" THICK)	SQ. YD.	19
1.0190	STANDARD MONUMENT BOX, (IN PLACE)	EA.	3
2.0010	GENERAL CLEARING AND GRUBBING	L. S.	1
2.0020	TREE REMOVAL (12" TO 23")	EA.	26
2.0030	TREE REMOVAL (24" TO 35")	EA.	4
02.0110	EARTHWORK MEASURED AS EMBANKMENT (E. Q.)	CU. YD.	23799
50.0040	9" DOWELED PORT. CEMENT CONC. PAV'T. W/INTEG. CURB	SQ. YD.	25777
6.0020	COMBINED CURB & GUTTER	L.F.	570
6.0050	CONCRETE MEDIAN NOSE, (In Place)	EA.	8
6.0060	CONCRETE MEDIAN SURFACING, 4" THICK	SQ. FT.	12118
3.0050	6" PORTLAND CEMENT CONCRETE PAVEMENT	SQ. YD.	33
7.0020	CONCRETE SIDEWALK, 4" THICK	SQ. FT.	31346
7.0045	CONCRETE BIKEWAY, 5" THICK	SQ. FT.	4120
50.0045	DETECTABLE WARNING PANELS	SQ. FT.	120
50.0010	BLOCK RETAINING WALL	SQ. FT.	2600
10.0010	CRUSHED ROCK SURFACING, (IN PLACE)	TON	114
01.0210	TYPE 'A' SAWING	L.F.	545
01.0220	TYPE 'B' SAWING	L.F.	51

NOTE: EARTH EXCAVATION OF 10611 CU. YD. (FOR INFORMATION ONLY)

EROSION CONTROL ITEMS

30.0100	SEEDING, TYPE "D"	AC.	13.8
30.0140	SEEDING, TYPE "F"	AC.	0.3
32.0040	SYNTHETIC FABRIC SILT FENCE INSTALLATION	L. F.	2020
32.0050	SYNTHETIC FABRIC SILT FENCE MAINTENANCE	L. F.	2020
32.0060	SYNTHETIC FABRIC SILT FENCE REMOVAL	L. F.	2020
32.0070	INSTALL STORM DRAIN INLET PROTECTION (TYPE I)	EA.	2
32.0080	STORM DRAIN INLET PROTECTION MAINT (TYPE I)	EA.	2
32.0090	REMOVE STORM DRAIN INLET PROTECTION (TYPE I)	EA.	2
50.0005	INSTALL STORM DRAIN INLET PROTECTION (TYPE II)	L. F.	100
50.0005	STORM DRAIN INLET PROTECTION MAINT (TYPE II)	L. F.	100
50.0005	REMOVE STORM DRAIN INLET PROTECTION (TYPE II)	L. F.	100
32.0100	SILT FENCE CULVERT INLET PROTECTION	L. F.	86
32.0110	SILT FENCE CULVERT INLET PROTECTION MAINT	L. F.	86
32.0120	REMOVE SILT FENCE CULVERT INLET PROTECTION	L. F.	86
50.0005	TRIANGULAR SILT DIKE INSTALLATION	L. F.	63
50.0005	TRIANGULAR SILT DIKE MAINTENANCE	L. F.	63
50.0005	TRIANGULAR SILT DIKE REMOVAL	L. F.	63
50.0045	SHEETPILE DITCH CHECK INSTALLATION	S.F.	367
50.0040	INSTALL TYPE I EROSION CONTROL MAT	SQ. YD.	6570
50.0040	INSTALL TYPE II EROSION CONTROL MAT	SQ. YD.	78
50.0040	INSTALL TYPE III EROSION CONTROL MAT	SQ. YD.	632

STORM DRAINAGE ITEMS

21.0070	36" R.C.P. STORM SEWER, CL. III	L. F.	613
21.0080	30" R.C.P. STORM SEWER, CL. III	L. F.	767
21.0090	24" R.C.P. STORM SEWER, CL. III	L. F.	48
21.0095	21" R.C.P. STORM SEWER, CL. III	L. F.	496
21.0100	18" R.C.P. STORM SEWER, CL. III	L. F.	102
21.0110	15" R.C.P. STORM SEWER, CL. III	L. F.	368
21.0780	72" CANTED STORM SEWER INLET, (COMPLETE)	EA.	10
21.0830	GRATE INLET, TYPE "F-2", (COMPLETE)	EA.	2
21.0890	STORM SEWER MANHOLE, 36", (COMPLETE)	EA.	2
21.0895	STORM SEWER MANHOLE, 15"-30", (COMPLETE)	EA.	3
50.0001	REINF. CONC. OUTLET STRUCTURE, (COMPLETE)	EA.	1
21.1750	REMOVE EXISTING HEADWALL, (COMPLETE)	EA.	2
50.0005	REMOVE & RELAY CORRUGATED METAL PIPE CULVERT	L.F.	92
50.0005	REMOVE EXISTING CORRUGATED METAL PIPE CULVERT	L.F.	155

PAVEMENT MARKING ITEMS

13.0270	PAINT MARKINGS, 4" YELLOW	L. F.	3686
13.0275	PAINT MARKINGS, 4" WHITE	L. F.	1326
13.0280	PAINT MARKINGS, 8" WHITE	L. F.	4837
13.0305	PAINT MARKINGS, 12" WHITE	L. F.	1269
50.0001	TUBULAR MARKERS, WHITE	EA.	8

MISCELLANEOUS ITEMS

50.0015	MOBILIZATION	L. S.	1
50.0015	TRAFFIC CONTROL FOR CONSTRUCTION	L. S.	1
50.0015	CONSTRUCTION STAKING	L. S.	1

WATER MAIN ITEMS

23.0010	36" D.I. PIPE WATER MAIN CL. 52 POLYWRAP	L. F.	131
23.0020	30" D.I. PIPE WATER MAIN CL. 52 POLYWRAP	L. F.	5708
23.0030	24" D.I. PIPE WATER MAIN CL. 52 POLYWRAP	L. F.	2988
23.0050	16" D.I. PIPE WATER MAIN CL. 52 POLYWRAP	L. F.	2921
23.0070	8" D.I. PIPE WATER MAIN CL. 52 POLYWRAP	L. F.	98
23.0080	6" D.I. PIPE WATER MAIN CL. 52 POLYWRAP	L. F.	60
50.0001	36" BUTTERFLY VALVE, M.J.	EA.	2
50.0001	30" BUTTERFLY VALVE, M.J.	EA.	6
23.0400	24" BUTTERFLY VALVE, M.J.	EA.	4
23.0420	16" BUTTERFLY VALVE, M.J.	EA.	4
23.0460	6" GATE VALVE, M.J.	EA.	33
50.0001	30" AIR-RELIEF VALVE IN MANHOLE, (COMPLETE)	EA.	1
50.0001	24" AIR-RELIEF VALVE IN MANHOLE, (COMPLETE)	EA.	2
23.0492	HYDRANT, COMPLETE (L=6.5')	EA.	30
23.0540	24" x 45° BEND, M.J.	EA.	2
50.0001	30" x 11.25° BEND, M.J.	EA.	4
50.0001	30" x 6" TEE, M.J.	EA.	15
23.0570	24" x 6" TEE, M.J.	EA.	7
50.0001	16" x 8" TEE, M.J.	EA.	1
23.0576	16" x 6" TEE, M.J.	EA.	8
23.0582	6" x 6" TEE, M.J.	EA.	3
23.0592	6" ANCHORING ELBOW, M.J.	EA.	29
23.0594	6" ANCHORING COUPLING, M. J. (L=18")	EA.	30
50.0001	36" x 36" CROSS, M.J.	EA.	1
50.0001	30" x 16" CROSS, M.J.	EA.	1
50.0001	36" x 30" REDUCER, M.J.	EA.	1
50.0001	36" x 24" REDUCER, M.J.	EA.	1
23.0644	24" SOLID SLEEVE, M.J. (L=15")	EA.	1
50.0001	16" DUAL PURPOSE SLEEVE, M.J.	EA.	1
23.0653	8" DUAL PURPOSE SLEEVE, M.J.	EA.	1
50.0001	36" PLUG, M.J.	EA.	1
50.0001	30" PLUG, M.J.	EA.	2
23.0658	16" PLUG, M.J.	EA.	1
23.0662	6" PLUG, M.J.	EA.	3
50.0001	2" PLUG, M.J.	EA.	1
50.0005	42" SMOOTH STEEL CASING, 0.500" THICK, BORED IN PLACE	L.F.	40
23.0665	CONCRETE FOR THRUST BLOCKS & ANCHORAGES, (IN PLACE)	CU. YD.	1
23.0960	REMOVE & SALVAGE HYDRANT, (COMPLETE)	EA.	2
23.0970	REMOVE & SALVAGE PLUG	EA.	1
23.1000	REMOVE & SALVAGE WATER VALVE & BOX, (COMPLETE)	EA.	2

TRAFFIC SIGNAL & LIGHTING ITEMS

24.0807	PULL BOX, TYPE PB-9	EA.	11
24.0810	PULL BOX, TYPE FOR27	EA.	10
24.0900	CONDUIT IN TRENCH, 1/2 INCH	L. F.	73
24.0903	CONDUIT IN TRENCH, 1 1/2 INCH	L. F.	3694
24.0904	CONDUIT IN TRENCH, 2 INCH	L. F.	2450
24.0905	CONDUIT IN TRENCH, 3 INCH	L. F.	74
24.0906	CONDUIT IN TRENCH, 4 INCH	L. F.	3179
24.1050	TRACER WIRE NO. 14 THHN	L. F.	6441
24.1072	STREET LIGHT CABLE, NO 4 USE	L. F.	1536
24.1073	STREET LIGHT CABLE, NO 6 USE	L. F.	768
24.1380	GROUND ROD, 10'	EA.	11
24.1194	VEHICLE DETECTOR, MAGNETIC	EA.	6
24.1690	VEHICLE DETECTOR, 4 TURNS UC	EA.	23
24.1476	STREET LIGHT POLE , TYPE SL-A-C-50-12T-5-0.25-PC	EA.	4
24.1481	STREET LIGHT POLE , TYPE SL-A-PI-50-12T-5-0.25-PC	EA.	2
24.6021	LOCATE STICK	EA.	1

PROFESSIONAL CIVIL ENGINEER
KENT E. EVANS
E-9875
STATE OF NEBRASKA

REVISED 7-16-2004 SUMMARY OF QUANTITIES

117-B-49

USER: SIC-WH
DATE: Friday, July 16, 2004
CGN: ...\701596WT08REV7504.cgn

CITY OF LINCOLN NEBRASKA	PROJECT NO.	SHEET NO.
	701596	90
	Date: 06-29-04	Drawn: JWH
	Horz. Scale 1 : 20	Checked:
	Vert. Scale 1 : 20	Approved:

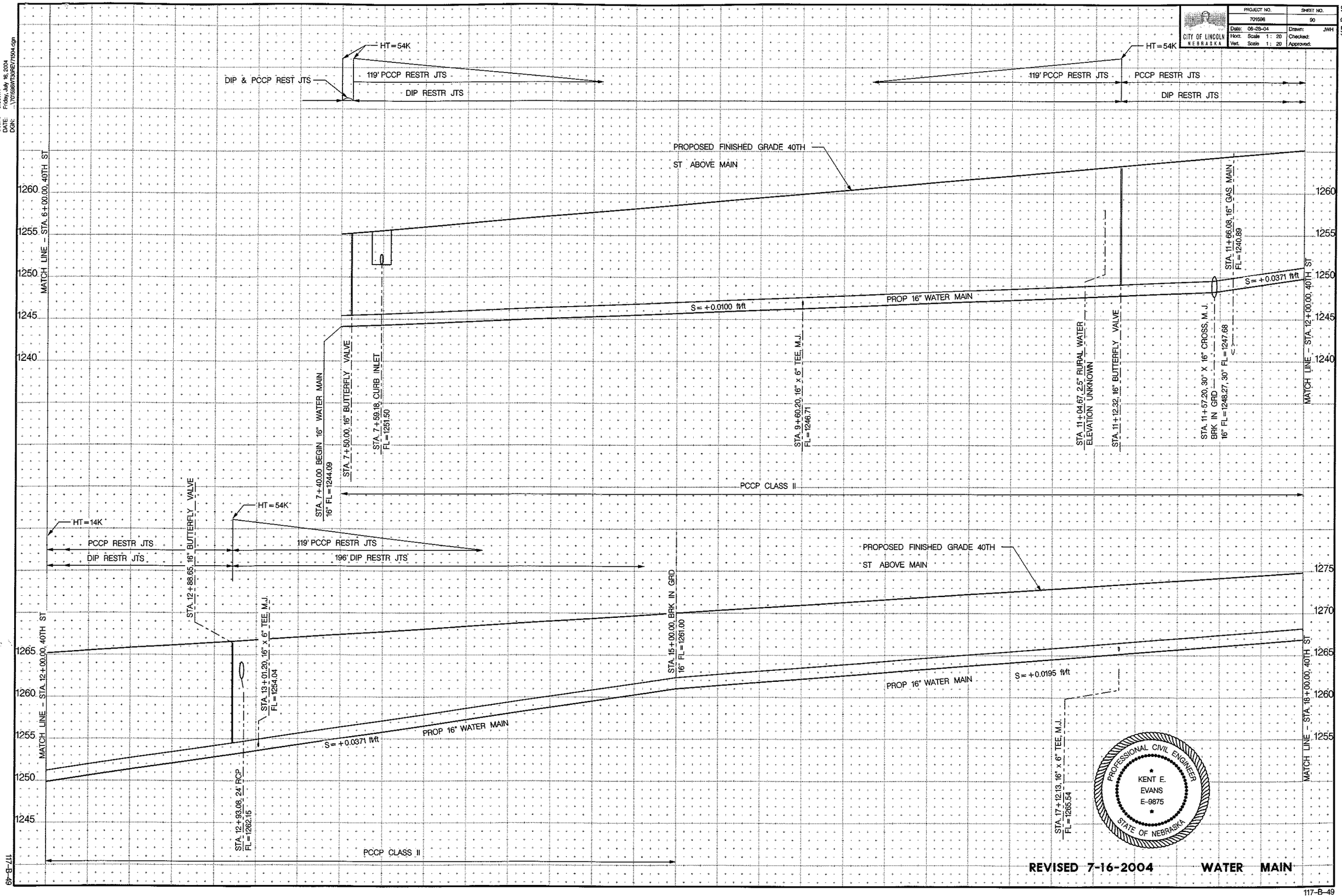

REVISED 7-16-2004 WATER MAIN

117-B-49

117-B-49

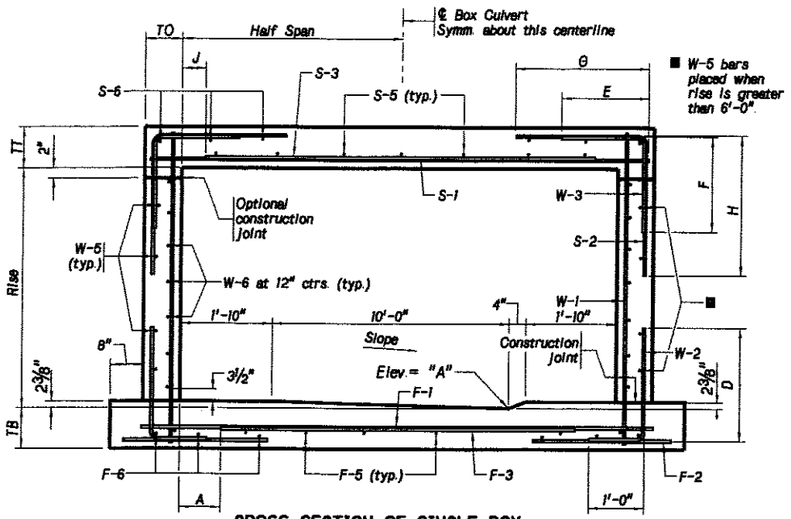

CROSS SECTION OF SINGLE BOX

East (Looking South) West

FLOW LINE ELEVATIONS	
LOCATION	"A"
NORTH END	1255.63
SOUTH END	1254.23

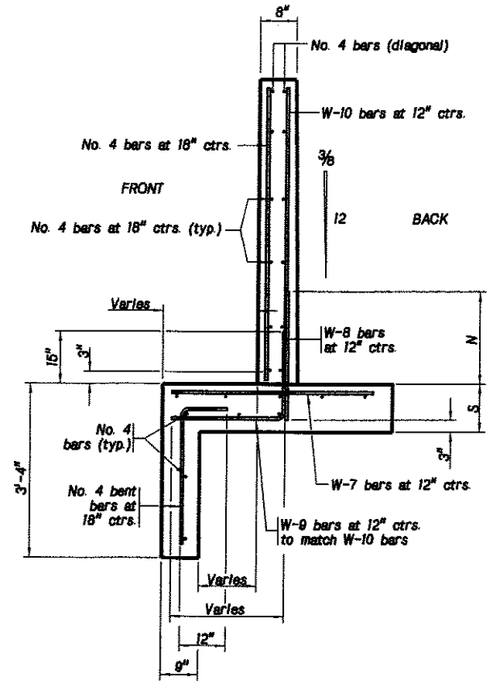

SECTION A-A

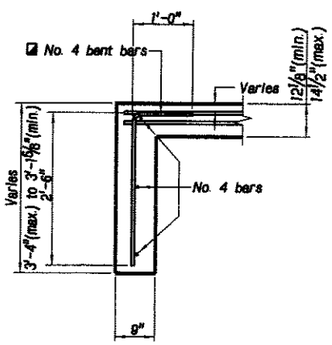

SECTION B-B

(Transverse floor bars are not shown)

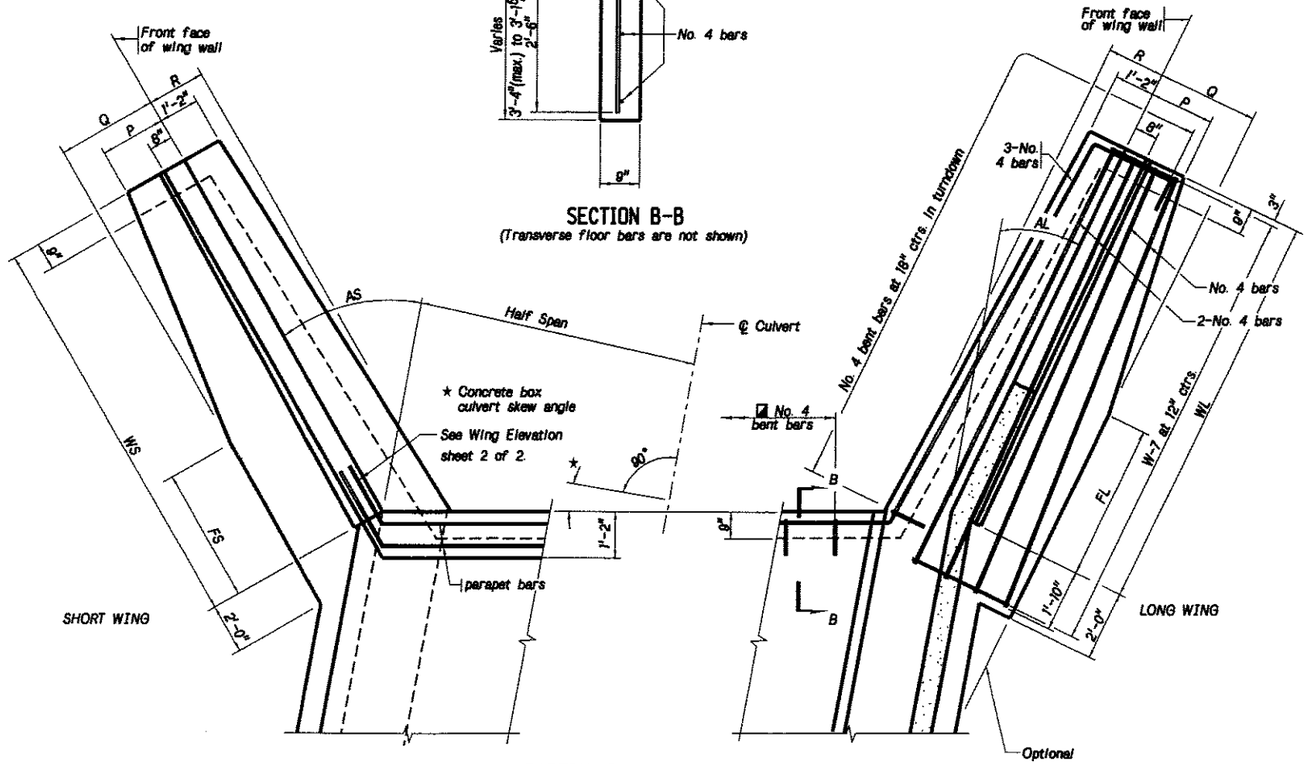

PARTIAL PLAN AT END

Left-hand-back box culvert skew shown
(with respect to centerline of box culvert)

NOTES

◪ See design data for parapet width.

If culvert is skewed, see design data for number of F-8 and S-8 bars.

◪ Spacing of the No. 4 bent bars shall be 18" when the barrel turndown is cast as a unit with the barrel floor. If a construction joint is used in the barrel turndown, then the spacing of bent bars shall be as follows: when the skew bar size is a No. 7 or smaller, the spacing of the No. 4 bent bars in barrel turndown is 18", if skew bar size is a No. 8, spacing is 14" and if skew bar size is a No. 9, spacing is 10". No additional allowances will be made for additional No. 4 bent bars required because of reduced bar spacing.

Spacing of the No. 4 bent bars shall be 18" in the wing footing turndowns with or without construction joints.

All concrete shall be class 47B-3000 or AX-3000.

The minimum covering, measured from the face of the concrete to the surface of a reinforcing bar shall be 3" for bars near the underside of culvert floor and wing footings, 1½" for skew bars at parapets, and 2" for all other bars, unless noted otherwise. Field bend and/or clip reinforcing bars to maintain minimum clearance.

All reinforcing steel shall conform to the requirements of ASTM designation A-615/A-615M, grade 60. All bar sizes are in customary U.S. units.

Payment for reinforcing steel shall be based on quantities as shown, and no allowances will be made for additional steel used in making splices.

Concrete and steel quantities per foot of barrel include concrete and steel in floor, walls and slab for one-foot length of barrel as shown in cross section.

The minimum lap for spliced bars shall be 24 bar diameters.

Concrete and steel quantities for two ends include all concrete and steel beyond vertical planes passing through ends of barrel, plus all concrete and steel not included in the barrel cross section.(Ex. parapets and skylights).

Excavation for two ends consists of neat excavation for barrel turndowns, wing footings and footing turndowns, but only for the portions below flow line.

Transverse barrel bars, except skew bars, shall be placed normal to the centerline of culvert.

Place F-3 bars midway between F-1 bars, W-3 bars midway between S-2 bars, and S-3 bars midway between S-1 bars.

Spacing of F-5 bars equals (span length plus 3½") divided by (number of F-5 bars minus 1).

Spacing of S-5 bars equals (span length) divided by (number of S-5 bars), with first bar being placed one-half space from inside face of wall.

Place F-4 bars below F-1 bars and S-4 bars above S-1 bars if spacing is not shown in the design data.

The contractor shall have the option of using dowel bars to match vertical wall bars as shown in the Optional Bar Detail. No allowances will be made for additional steel required for bar laps.

Wingwalls may be built without the vertical ⅜:12 taper, however no allowances will be made for additional materials, tools, labor or incidentals required to complete the work.

Construct fence connections in accordance to the Standard Specifications.

DATA

SINGLE SPAN REINFORCED CONCRETE BOX CULVERT

SPAN	RISE	FILL	SKEW	DES LOAD	WINGS	WINGS ON
14.00'	8.36'	3.50'	0. DEG	HS25	FLARED	TWO ENDS

BARREL SLAB THICKNESSES: BOTTOM (TB) = 12.125"
SIDE (TO) = 8.5"
TOP (TT) = 10.0"

DESIGN PARAMETERS				
WALL	SLOPE	FY	FCS	IDESNM
F	4.0	60000.	3000.	5

BARREL BAR DIMENSIONS
A= 1'-11.0" D= 3'- 3.0"
E= 2'- 5.0" F= 7'-6.0" G= 3'- 1.0" H= 3'-9.0"
J= 1'- 4.0"

BARREL REINFORCING STEEL

BAR	SIZE	SPAC	NO	LENGTH	BAR	SIZE	SPAC	NO	LENGTH	BAR	SIZE	SPAC	NO	LENGTH
F-1	6	9.5"		15'- 5.0"	W-1	4	16.0"		9'- 9.5"	S-1	5	9.0"		15'- 1.0"
F-2	5	8.0"		4'- 0.0"	W-2	6	8.0"		4'- 1.0"	S-2	4	11.0"		6'-9.0"
F-3	6	9.5"		10'- 2.0"	W-3	5	11.0"		9'- 9.5"	S-3	6	9.0"		11'- 4.0"
F-5	4		11		W-5	4		8		S-5	4		10	
F-6	4		6		W-6	4		16		S-6	4		6	

QUANTITIES (PER FOOT OF BARREL)
CONCRETE 1.616 CU YDS
REINFORCING 203.1 LBS

PARAPET WIDTH = 12.0"

WING ANGLES AND DIMENSIONS
AL= 30.0 DEG AS= 30.0 DEG
FL= 8'-6.0" FS= 8'-6.0" N= 4'- 0.0" P= 4'- 1.0"
Q= 5'- 3.0" R= 3'-0.0" T= 5'-6.5" U= 9'- 0.0"
WL= 25'- 6.0" WS=25'- 6.0" XL= 9'- 8.0" XS= 9'- 8.0"
S= 14.5"

QUANTITIES FOR PARAPETS, SKYLIGHTS AND WINGS ON TWO ENDS
CONCRETE 93.36 CU YDS
REINFORCING 7423. LBS
EXCAVATION 37. CU YDS

STEEL FOR WINGS

BAR	SIZE
W-7	6
W-8	6
W-9	5
W-10	5

NOTE:
SEE PLAN VIEWS AND SECTIONS FOR PARAPET BARS, TURNDOWN BARS AND OTHER WING BARS.

PROJECT NUMBER | SHEET NO.
C.N.
STRUCTURE NUMBER

SINGLE SPAN
CONCRETE BOX CULVERT
PEDESTRIAN UNDERPASS

DATE DECEMBER 2002

COUNTY LANCASTER LOCATION 38TH AND YANKEE HILL ROAD
HWY. NO. SKEW 0°
REF. POST. ROADWAY --
STA. 33+50.00 DESIGN LIVE LOAD HS25
DESIGNED BY RH DETAILED BY MGS CHECKED BY
SPEECE-LEWIS ENGINEERS LINCOLN, NEBRASKA

Speece Lewis engineers

1-14-04

SPECIAL PLAN NO. 1 | 1/4

Skylight by Naturalite
750 Airport Rd., Terrell, Texas 75160
1-800-527-4018

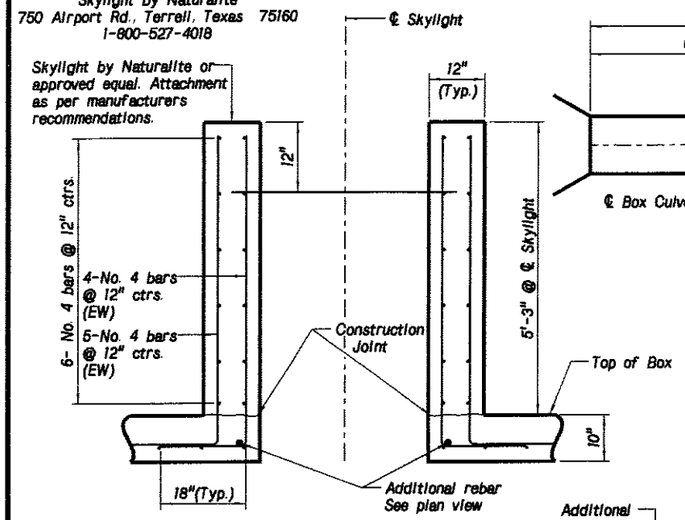

SECTION AT SKYLIGHT

(EW)= Each Wall

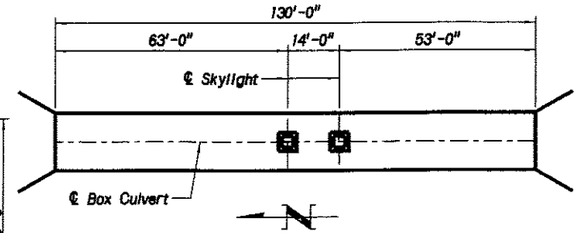

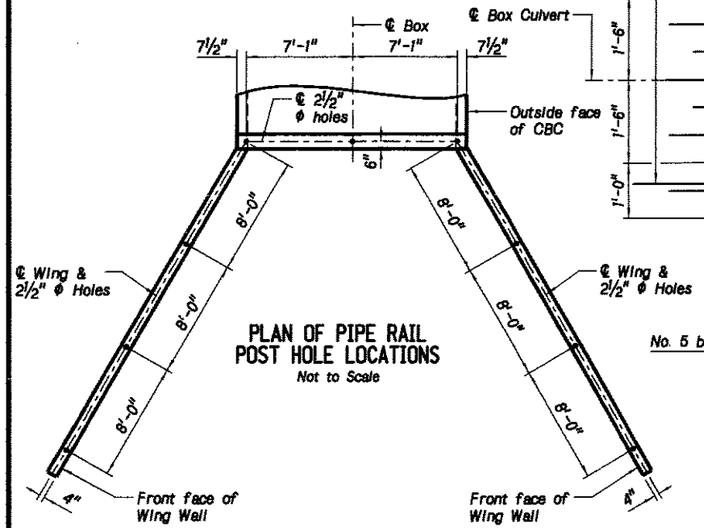

PLAN OF PIPE RAIL POST HOLE LOCATIONS

Not to Scale

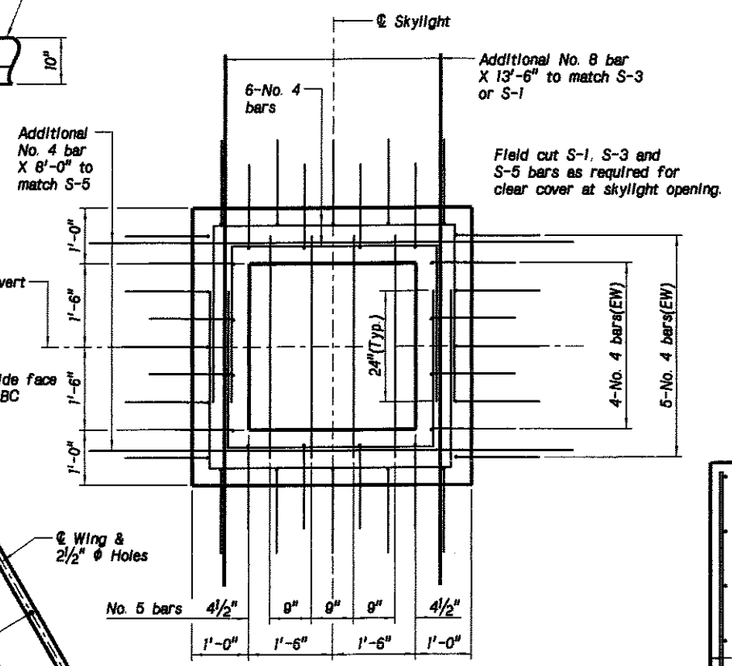

PLAN OF SKYLIGHT

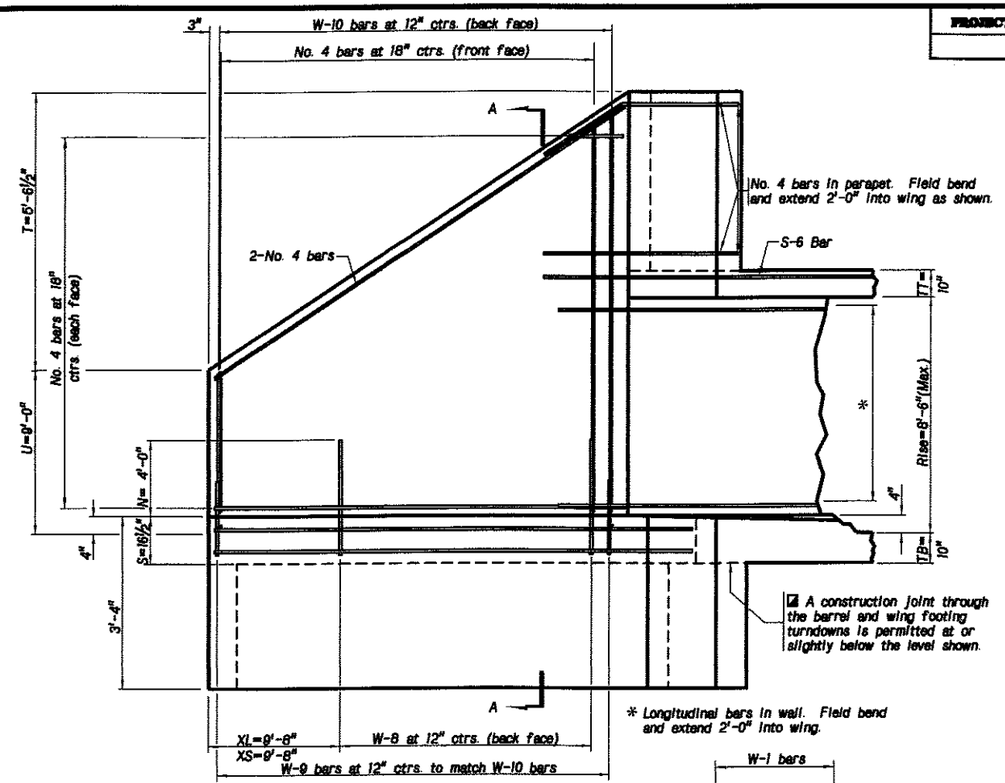

ELEVATION OF WING

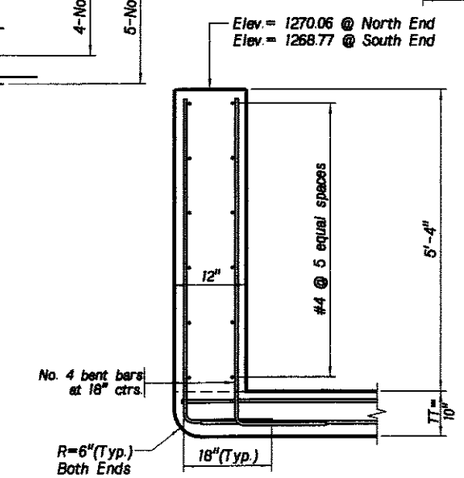

SECTION THROUGH 12" PARAPET

(Showing double row of bent bars)
(Transverse slab bars not shown)

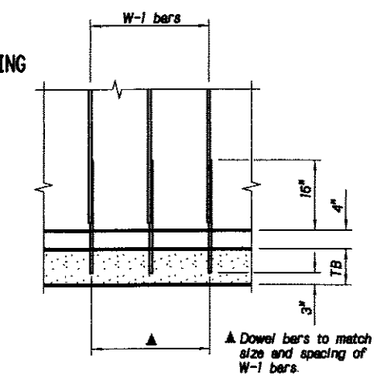

OPTIONAL BAR DETAIL

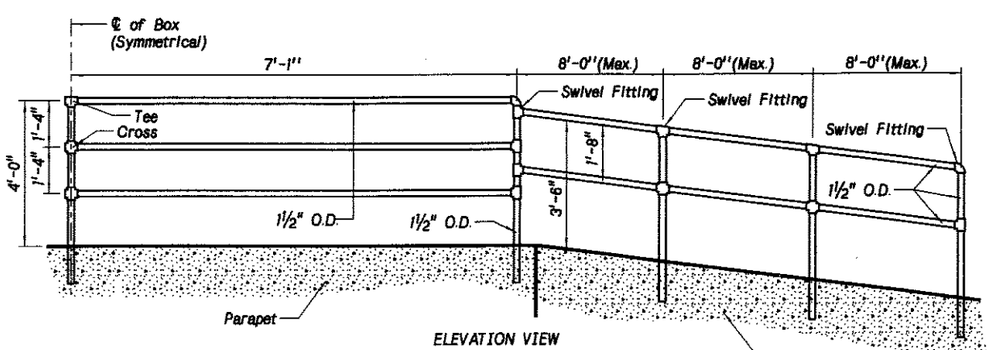

ELEVATION VIEW

Refer to City of Lincoln Standard Plans: LSP 650

TYPICAL PIPE RAILING ON PARAPET AND WINGWALL

Not to Scale

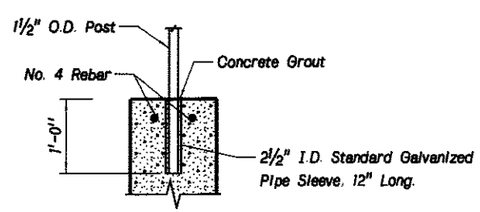

TYPICAL POST SETTING ON PARAPET OR WINGWALL

Not to Scale

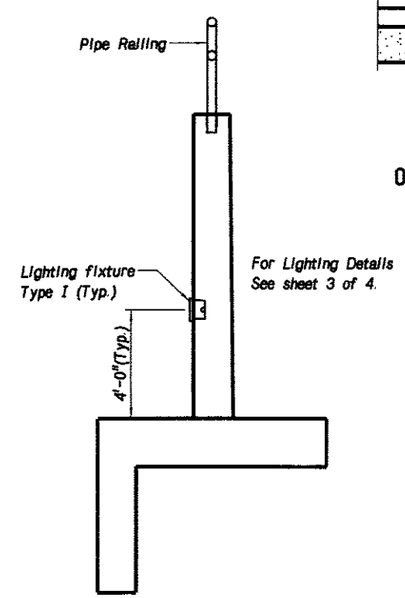

SECTION AT WINGWALL

Not to Scale

PROJECT NUMBER

C.N.

STRUCTURE NUMBER

SINGLE SPAN CONCRETE BOX CULVERT PEDESTRIAN UNDERPASS

LINCOLN, NEBRASKA

DATE DECEMBER 2002

CHECKED BY

DETAILED BY MGS

DESIGNED BY RH

SPEECE-LEWIS ENGINEERS

LOCATION 38TH AND YANKEE HILL ROAD

SKEW 0°

ROADWAY --

DESIGN LIVE LOAD HS25

COUNTY LANCASTER

HWY. NO.

REF. POST.

STA. 33+50.00

Speece Lewis engineers

1-14-04

SPECIAL PLAN NO. 1

2/4

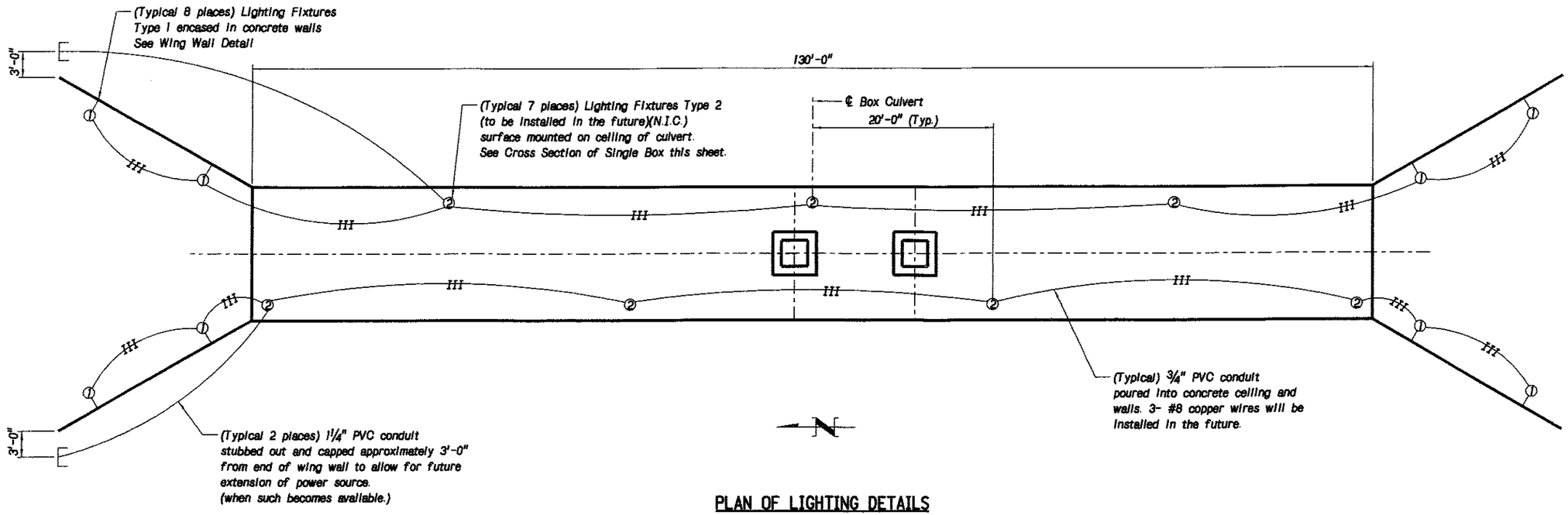

PLAN OF LIGHTING DETAILS

Not to Scale

LIGHTING FIXTURE SCHEDULE

1. Kim Cat * LLF60-100MH240 NAE with 100 Watt Metal Halide Lamp, 240 Volt Ballast, and Natural Aluminum Finish.

2. Kenall Cat *5333-PC with 100 Watt Metal Halide Lamp and 240 Volt Ballast.

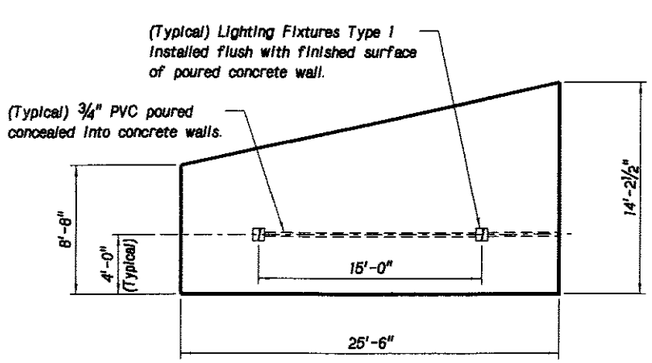

TYPICAL WING WALL

Not to Scale

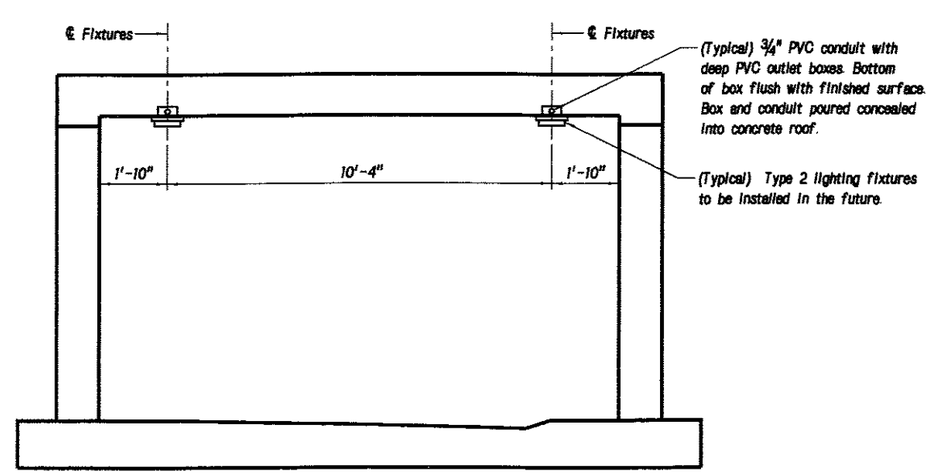

CROSS SECTION OF SINGLE BOX

Not to Scale

PROJECT NUMBER

C.N.

STRUCTURE NUMBER

SINGLE SPAN CONCRETE BOX CULVERT
ELECTRICAL LIGHTING DETAILS
PEDESTRIAN UNDERPASS

DATE DECEMBER 2002

LINCOLN, NEBRASKA

COUNTY LANCASTER LOCATION 38TH AND YANKEE HILL ROAD
HWY. NO. SKEW 0°
REF. POST. ROADWAY --
STA. 33+50.00 DESIGN LIVE LOAD HS25
DESIGNED BY RH DETAILED BY MGS CHECKED BY
SPEECE-LEWIS ENGINEERS

Speece Lewis engineers

1-14-04

SHEET PLAN NO. 1 / 3 / 4

PROJECT NUMBER	SHEET
38th and Yankee Hill	4 OF

HORIZONTAL SCALE: 1"=
VERTICAL SCALE: 1"=10'

STA. 33+50.00
BUILD TRIPLE 14' X 8.5' X 130' CONCRETE
BOX CULVERT ON 0° SKEW.
SPECIAL PLAN NO. 1, FILL= 3.5'
CONCRETE (1.591 X 130) + 93.36= 300.1 CU. YDS.
STEEL (203.1 X 130) + 7423= 33,826 LBS.

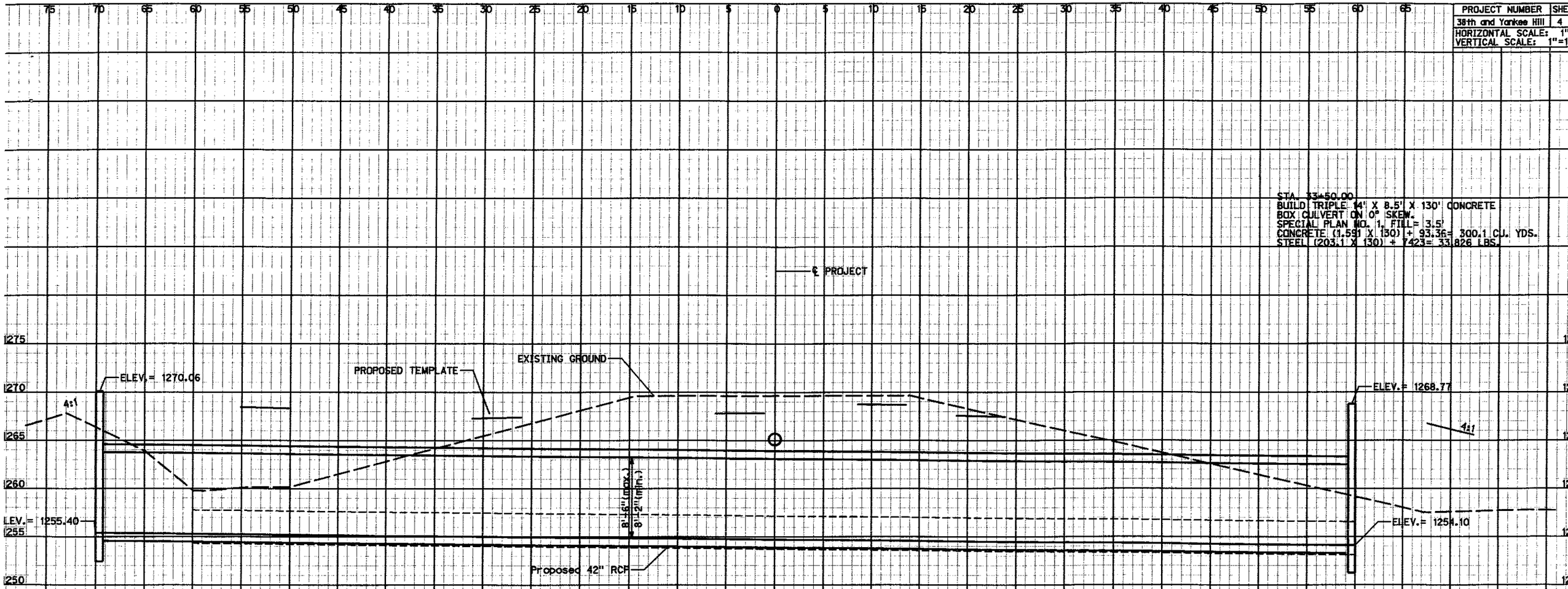

REGISTERED PROFESSIONAL ENGINEER
HANSEN
NEBRASKA

1-14-04