IT IS THE VENDOR'S RESPONSIBILITY TO CHECK FOR ADDENDUM PRIOR TO SUBMITTING PROPOSALS

NOTICE TO BIDDERS
SPECIFICATION NO. 05-143

The City of Lincoln, Nebraska intends to purchase and invites you to submit a sealed bid for:

SIGN FOR THE WATER SHOP LANDSCAPE GARDEN

Sealed bids will be received by the City of Lincoln, Nebraska on or before 12:00 noon **Wednesday, June 15, 2005** in the office of the Purchasing Agent, Suite 200, K Street Complex, Southwest Wing, 440 South 8th Street, Lincoln, Nebraska 68508. Bids will be publicly opened and read at the K Street Complex. **Bids may be downloaded from the City's website at www.lincoln.ne.gov (Keyword: bid) Prospective bidders must monitor the City website, for any addendums.**

Bidders should take caution if U.S. mail or mail delivery services are used for the submission of bids. Mailing should be made in sufficient time for bids to arrive in the Purchasing Division, prior to the time and date specified above. Late bids will not be considered. **Fax or e-mail bids are not acceptable. Bid response must be in a sealed envelope.**

PROPOSAL
SPECIFICATION NO. 05-143
BID OPENING TIME: 12:00 NOON
DATE: Wednesday, June 15, 2005

The undersigned, having full knowledge of the requirements of the City of Lincoln for the below listed phases and the contract documents (which include Notice, Instructions, this Proposal, Specifications, Contract, and any and all addenda) and all other conditions of the Proposal, agrees to enter into a contract with the City the below listed fees for the performance of this Specification, complete in every respect, in strict accordance with the contract documents at and for fees listed below.

ADDENDA RECEIPT: The receipt of addenda to the specification numbers ____ through ____ are hereby acknowledged. Failure of any submitter to receive any addendum or interpretation of the specifications shall not relieve the submitter from any obligations specified in the request. All addenda shall become part of the final contract document.

Item	Qty.	Unit	Description	Unit cost	Total Cost
1.	One (1)	Each	Sign for the Water Shop Landscape Garden	Lump Sum	$_____

NO BID SECURITY WILL BE REQUIRED

A Material Payment and Performance Bond will be required before a contract is signed.

AFFIRMATIVE ACTION PROGRAM: Successful bidder will be required to comply with the provisions of the City's Affirmative Action Policy (Contract Compliance, Sec. 1.16). The Equal Opportunity Officer will determine compliance or non-compliance with the City's policy upon a complete and substantial review of successful bidder's equal opportunity policies, procedures and practices.

The undersigned signatory for the bidder represents and warrants that he has full and complete authority to submit this proposal to the City, and to enter into a contract if this proposal is accepted.

RETURN 2 COMPLETE COPIES OF PROPOSAL AND SUPPORTING MATERIAL.
MARK OUTSIDE OF BID ENVELOPE: SEALED BID FOR SPEC. 05-143

COMPANY NAME	**BY (Signature)**
STREET ADDRESS or P.O. BOX	**(Print Name)**
CITY, STATE ZIP CODE	**(Title)**
TELEPHONE No. FAX No.	**(Date)**
EMPLOYER'S FEDERAL I.D. NO. OR SOCIAL SECURITY NUMBER	**ESTIMATED DELIVERY DAYS**
E-MAIL ADDRESS	**TERMS OF PAYMENT**

Bids may be inspected in the Purchasing Division offices during normal business hours, **after** tabulation by the purchasing agent. If you desire a copy of the bid tabulation to be mailed to you, you must enclose a self-addressed stamped envelope with your bidding documents.
Bid Tabulations can also be viewed on our website at: Lincoln.ne.gov Keyword: Bid

INSTRUCTIONS TO BIDDERS

CITY OF LINCOLN, NEBRASKA
PURCHASING DIVISION

1. BIDDING PROCEDURE

1.1 Bidder shall submit one (1) complete set of the bid documents and all supporting material, unless otherwise stipulated. All appropriate blanks shall be completed. Any interlineation, alteration or erasure on the specification document shall be initialed by the signer of the bid. Bidder shall not change the proposal form nor make additional stipulations on the specification document. Any amplified or qualifying information shall be on the bidder's letterhead and firmly attached to the specification document.

1.2 Bid prices shall be submitted on the Proposal Form included in the bid document.

1.3 Bidders may submit a bid on an "all or none" or "lump sum" basis, but should also submit a quotation on an item-by-item basis. Bidding documents shall be clearly marked indicating the kind of proposal being submitted.

1.4 Each bid must be legibly printed in ink or typed, include the full name, business address, and telephone number of the bidder; and be signed in ink by the bidder.

1.5 A bid by a firm or organization other than a corporation must include the name, address, fax number and email address of each member.

1.6 A bid by a corporation must be signed in the name of such corporation by a duly authorized official thereof.

1.7 Any person signing a bid for a firm, corporation, or other organization must show evidence of his authority so to bind such firm, corporation, or organization.

1.8 Bids received after the time and date established for receiving bids will be rejected.

2. BIDDER'S SECURITY

2.1 Bid security, as a guarantee of good faith, in the form of a certified check, cashier's check, or bidder's bond, may be required to be submitted with this bid document, as indicated of the Proposal Form.

2.2 If alternates are requested, only one bid security will be required, provided the bid security is based on the amount of the highest gross bid.

2.3 Such bid security will be returned to the unsuccessful bidders when the award of bid is made.

2.4 Bid security will be returned to the successful bidder(s) as follows:

2.4.1 For single order bids with specified quantities: upon the delivery of all equipment or merchandise, and upon final acceptance by the City.

2.4.2 For all other contracts: upon approval by the City of the executed contract and bonds.

2.5 City shall have the right to retain the bid security of bidders to whom an award is being considered until either:

2.5.1 A contract has been executed and bonds have been furnished.

2.5.2 The specified time has elapsed so that the bids may be withdrawn.

2.5.3 All bids have been rejected.

2.6 Bid security will be forfeited to the City as full liquidated damages, but not as a penalty, for any of the following reasons, as pertains to this specification document:

2.6.1 If the bidder fails to deliver the equipment or merchandise in full compliance with the accepted proposal and specifications.

2.6.2 If the bidder fails or refuses to enter into a contract on forms provided by the City, and/or if the bidder fails to provide sufficient bonds or insurance within the time period as established in this specification document.

3. BIDDER'S REPRESENTATION

3.1 Each bidder by signing and submitting a bid, represents that the bidder has read and understands the specification documents, and the bid has been made in accordance therewith.

3.2 Each bidder for services further represents that the bidder has examined and is familiar with the local conditions under which the work is to be done and has correlated the observations with the requirements of the bid documents.

4. CLARIFICATION OF SPECIFICATION DOCUMENTS

4.1 Bidders shall promptly notify the Purchasing Agent of any ambiguity, inconsistency or error which they may discover upon examination of the specification documents.

4.2 Bidders desiring clarification or interpretation of the specification documents shall make a written request which must reach the Purchasing Agent at least four (4) calendar days prior to the date and time for receipt of bids.

4.3 Changes made to the specification documents will be made by written addenda to all known prospective bidders.

4.4 Oral interpretations or changes to the Specification Documents made in any other manner, will not be binding on the City; and bidders shall not rely upon such interpretations or changes.

5. ADDENDA

5.1 Addenda are additional documents issued by the City to prospective Bidders prior to the closing date for receipt of bids, which are intended to change or clarify the original plans and/or specifications., i.e. additions, deletions, modifications, or explanations.

5.2 Addenda will be mailed or delivered to all who are known by the City to have received a complete set of specification documents.

5.3 Copies of addenda will be made available for inspection at the office of the Purchasing Agent.

5.4 No addendum will be issued later than forty-eight (48) hours prior to the date and time for receipt of bids, except an addendum withdrawing the invitation to bid, or an addendum which includes postponement of the bid.

5.5 Bidders shall ascertain prior to submitting their bid that they have received all addenda issued, and they shall acknowledge receipt of addenda on the proposal form.

6. ANTI-LOBBYING PROVISION

6.1 During the period between the bid advertisement date and the contract award, bidders, including their agents and representatives, shall not lobby or promote their bid with any member of the City Council or City Staff.

7. BRAND NAMES

7.1 Wherever in the specifications or proposal form brand names, manufacturer, trade name, or catalog numbers are specified, it is for the purpose of establishing a grade or quality of material only; and the term "or equal" is deemed to follow.

7.2 It is the bidder's responsibility to identify any alternate items offered in the bid, and prove to the satisfaction of the City that said item is equal to, or better than, the product specified.

7.3 Bids for alternate items shall be stated in the appropriate brand on the proposal form, or if the proposal form does not contain blanks for alternates, bidder MUST attach to the specification documents on Company letterhead a statement identifying the manufacturer and brand name of each proposed alternate, plus a complete description of the alternate items including illustrations, performance test data and any other information necessary for an evaluation. The bidder must indicate any variances by item number from the specification document no matter how slight. Bidder must fully explain the variances from the specification document, since brochure information may not be sufficient.

7.4 If variations are not stated in the proposal, it will be assumed that the item being bid fully complies with the City's specifications.

8. DEMONSTRATIONS/SAMPLES

8.1 Bidders shall demonstrate the exact item(s) proposed within seven (7) calendar days from receipt of such request from the City.

8.2 Such demonstration can be at the City delivery location or a surrounding community.

8.3 If the bidder is proposing an alternate product, the City may request a sample of the exact item. Samples will be returned at bidder's expense after receipt by the City of acceptable goods. Bidders must indicate how samples are to be returned.

9. DELIVERY (Non-Construction)

9.1 Each bidder shall state on his proposal form the date upon which he can make delivery of all equipment or merchandise. Time required for delivery is hereby made an essential element of the bid.

9.2 The City reserves the right to cancel orders, or any part thereof, without obligation, if delivery is not made within the time(s) specified on the proposal form.

9.3 All bids shall be based upon **inside** delivery of the equipment/ merchandise F.O.B. the City at the location specified by the City, with all transportation charges paid.

10. WARRANTIES, GUARANTEES AND MAINTENANCE

10.1 Copies of the following documents must accompany the bid proposal for all items being bid:

10.1.1 Manufacturer's warranties and/or guarantees.

10.1.2 Bidder's maintenance policies and associated costs.

10.2 As a minimum requirement of the City, the bidder will guarantee in writing that any defective components discovered within a one (1) year period after the date of acceptance shall be replaced at no expense to the City. Replacement parts of defective components shall be shipped at no cost to the City. Shipping costs for defective parts required to be returned to the bidder shall be paid by the bidder.

11. ACCEPTANCE OF MATERIAL

11.1 All components used in the manufacture or construction of materials, supplies and equipment, and all finished materials, shall be new, the latest make/model, of the best quality, and the highest grade workmanship.

11.2 Material delivered under this proposal shall remain the property of the bidder until:

11.2.1 A physical inspection and actual usage of this material is made and found to be acceptable to the City; and

11.2.2 Material is determined to be in full compliance with the specifications and accepted proposal.

11.3 In the event the delivered material is found to be defective or does not conform to the specification documents and accepted proposal, then the City reserves the right to cancel the order upon written notice to the bidder and return materials to the bidder at bidder's expense.

11.4 Successful bidder shall be required to furnish title to the material, free and clear of all liens and encumbrances, issued in the name of the City of Lincoln, Nebraska, as required by the specification documents or purchase orders.

11.5 Selling dealer's advertising decals, stickers or other signs shall not be affixed to equipment. Vehicle mud flaps shall be installed blank side out with no advertisements. Manufacturer's standard production forgings, stampings, nameplates and logos are acceptable.

12. BID EVALUATION AND AWARD

12.1 The signed bid proposal shall be considered an offer on the part of the bidder. Such offer shall be deemed accepted upon issuance by the City of purchase orders, contract award notifications, or other contract documents appropriate to the work.

12.2 No bid shall be modified or withdrawn for a period of ninety (90) calendar days after the time and date established for receiving bids, and each bidder so agrees in submitting the bid.

12.3 In case of a discrepancy between the unit prices and their extensions, the unit prices shall govern.

12.4 The bid will be awarded to the lowest responsible, responsive bidder whose proposal will be most advantageous to the City, and as the City deems will best serve it's requirements.

12.5 The City reserves the right to accept or reject any or all bids; to request rebids; to award bids item-by-item, with or without alternates, by groups, or "lump sum"; to waive minor irregularities in bids; such as shall best serve the requirements and interests of the City.

12.6 In order to determine if the Bidder has the experience, qualifications, resources and necessary attributes to provide the quality workmanship, materials and management required by the plans and specifications, the Bidder may be required to complete and submit additional information as deemed necessary by the City. Failure to provide the information requested to make this determination may be grounds for a declaration of non-responsive with respect to the Bidder.

12.7 The City reserves the right to reject irregular bids that contain unauthorized additions, conditions, alternate bids, or irregularities that make the Bid Proposal incomplete, indefinite or ambiguous.

13. INDEMNIFICATION

13.1 The bidder shall indemnify and save harmless the City of Lincoln, Nebraska from and against all losses, claims, damages, and expenses, including, attorney's fees arising out of or resulting from the performance of the contract that results in bodily injury, sickness, disease, death, or to injury to or destruction of tangible property, including the loss of use resulting therefrom and is caused in whole or in part by the Bidder, any subcontractor, any directly or indirectly employed by any of them or anyone for whose acts any of them may be liable. This section will not require the Bidder to indemnify or hold harmless the City of Lincoln for any losses, claims damages, and expenses arising out of or resulting from the sole negligence of the City of Lincoln, Nebraska.

13.2 In any and all claims against the City or any of its members, officers or employees by an employee of the bidder, any subcontractor, anyone directly or indirectly employed by any of them or by anyone for whose acts made by any of them may be liable, the indemnification obligation under paragraph 13.1 shall not be limited in any way by any limitation of the amount or type of damages, compensation or benefits payable by or for the bidder or any subcontractor under worker's or workmen's compensation acts, disability benefit acts or other employee benefit acts.

14. TERMS OF PAYMENT

14.1 Unless stated otherwise, the City will begin processing payment within thirty (30) calendar days after all labor has been performed and all equipment or other merchandise has been delivered, and all such labor and equipment and other materials have met all contract specifications.

15. LAWS

15.1 The Laws of the State of Nebraska shall govern the rights, obligations, and remedies of the Parties under this proposal and any agreement reached as a result of this process.

15.2 Bidder agrees to abide by all applicable State and Federal laws and regulations concerning the handling and disclosure of private and confidential information concerning individuals and corporations as to inventions, copyrights, patents and patent rights.

16. AFFIRMATIVE ACTION

16.1 The City of Lincoln-Lancaster County Purchasing Division provides equal opportunity for all bidders and encourages minority businesses and women's business enterprises to participate in our bidding process.

17. LIVING WAGE

17.1 The bidders agree to pay all employees employed in the performance of this contract, a base wage of not less than the City Living Wage per section 2.81.010 of the Lincoln Municipal Code. This wage is subject to change every July.

18. EXECUTION OF AGREEMENT

18.1 Depending on the type of service provided, one of the following three (3) methods will be employed. The method applicable to this contract will be checked below:

___ a. This Contract shall consist of a **PURCHASE ORDER** and a copy of the suppliers signed bid (or referenced bid number) attached and that the same, in all particulars, becomes the agreement and contract between the parties hereto: that both parties thereby accept and agree to the terms and conditions of said bid documents, and that the parties are bound thereby and the compensation to be paid the Supplier is as set forth in the Supplier's Bid. Items not awarded, if any, have been deleted.

__ b. The contract shall consist of a **YEARLY AGREEMENT** and a copy of the suppliers signed bid attached and that the same, in all particulars, becomes the agreement and contract between the parties hereto. That both parties thereby accept and agree to the terms and conditions of said bid documents, and that the parties are bound thereby and the compensation to be paid the Supplier is as set forth in the Suppliers' Bid. Items not awarded, if any, have been deleted.

_X_ c. Three (3) copies of the **CONTRACT,** unless otherwise noted.

1. City will furnish three (3) copies of the Contract to the successful Bidder who shall prepare attachments as required. Insurance as evidenced by a Certificate of Insurance, surety bonds properly executed, and Agreement signed with the date of signature shall be attached.

2. The prepared documents shall be delivered to the City within 10days (unless otherwise noted).

3. The City will sign the Contract Agreement, insert the date of signature at the beginning of the Contract Agreement, prepare an Executive Order to go the Mayor for signature.

4. Upon approval and signature from the Mayor, the City will return one copy to the Contractor.

INSURANCE REQUIREMENTS
FOR ALL CITY CONTRACTS

1. GENERAL PROVISIONS

A. **Indemnification.** The Contractor shall indemnify and save harmless the City of Lincoln, Nebraska from and against all losses, claims, damages, and expenses, including attorney's fees, arising out of or resulting from the performance of the contract that results in bodily injury, sickness, disease, death, or to injury to or destruction of tangible property, including the loss of use resulting therefrom and is caused in whole or in part by the Contractor, any subcontractor, any directly or indirectly employed by any of them or anyone for whose acts any of them may be liable. This section will not require the Contractor to indemnify or hold harmless the City of Lincoln for any losses, claims, damages, and expenses arising out of or resulting from the sole negligence of the City of Lincoln, Nebraska.

B. **Approved Coverage Prior to Commencing Work/Subcontractors Included.** Contractor shall purchase and maintain in place insurance to Protect Contractor and City against all liabilities and hazards as provided in this article throughout the duration of the Contract. Contractor shall not commence work under this contract until the Contractor has obtained all insurance required under this Section and such insurance has been approved by the City Attorney for the City of Lincoln, nor shall the Contractor allow any subcontractor to commence work on any subcontract until all similar insurance required of the subcontractor has been so obtained and approved.

C. **Occurrence Basis Coverage.** All insurance shall be provided on an ***occurrence basis*** and not on a claims made basis, except for hazardous materials, errors and omissions, or other coverage not reasonably available on an occurrence basis; provided that all such claims made coverage is subject to the prior written approval of the City Attorney and must be clearly indicated as such in any certificate showing coverage.

D. **Authorized and Rated Insurers Required.** All insurance coverage are to be placed with insurers authorized to do business in the State of Nebraska and must be placed with an insurer that has an A.M. Best's Rating of no less than A:VII unless specific approval has been granted by the City Attorney.

E. **Certificates Showing Coverage.** All certificates of insurance shall be filed with the City Attorney, and may utilize an appropriate standard ACORD Certificate of Insurance form showing the specific limits of insurance coverage required by this Article; provided that restrictions, qualifications or declarations inconsistent with the requirements of this Article shall not relieve the Contractor from providing insurance as required herein. Such certificates shall show the City of Lincoln as additional insured, including by specific endorsement where necessary, as indicated in the following requirements. Such certificate shall specifically state that the related insurance policies are to be endorsed to require the insurer to provide the City of Lincoln thirty days, notice of cancellation, non-renewal or any material reduction in the stated amounts or limits of insurance coverage.

F. **Terminology.** The terms “insurance,” “insurance policy,” or “coverage” as used in this article are used interchangeably and shall have the same meaning as “insurance” unless the context clearly requires otherwise. References to “ISO®” forms are merely for convenience and ease of reference, and an equivalent or better form as determined acceptable by the City Attorney may be used. (Note: ISO® is a registered trademark of ISO Properties, Inc.)

2. INSURANCE REQUIREMENTS

A. **Scope of Required Coverage**. The Contractor shall take out and maintain during the life of Contract such insurance in the forms and minimum amounts as specified in this Article and as will protect Contractor and City from the following claims arising out of or resulting from or in connection

with the Contractor's operations, undertakings or omissions directly or indirectly related to the Contract, whether by the Contractor or any Subcontractor or anyone directly or indirectly employed by any of them, or by anyone for whose acts any of them may be liable:

(1) Claims under workers' compensation, disability benefit, or other employee benefit acts;

(2) Claims arising out of bodily injury, occupational sickness or disease, or death of an employee or any other person;

(3) Claims customarily covered under personal injury liability coverage;

(4) Claims other than to the work itself arising out of an injury to or destruction of tangible property, including the loss of use resulting therefrom;

(5) Claims arising out of ownership, maintenance or use of any motor vehicle;

(6) Railroad protective liability coverage in the event the contract involves work to be performed within 50 feet of any railroad property and affecting any railroad bridge or trestle, tracks, road beds, tunnel, underpass or crossing.

B. **Worker's Compensation Insurance and Employer's Liability Insurance**. The Contractor shall provide applicable statutory Worker's Compensation Insurance with minimum limits as provided below covering all Contractor's employees, and in the case of any subcontracted work, the Contractor shall require the subcontractor similarly to provide Worker's Compensation Insurance for Subcontractor's employees.

The Contractor shall provide Employer's Liability Insurance with minimum limits as provided below placed with an insurance company authorized to write such insurance in all states where the Contractor will have employees located in the performance of this contract, and the Contractor shall require each Subcontractor similarly to maintain Employer's Liability Insurance on the Subcontractor's employees.

Coverage	**Listing**	**Min Amt**	**Notes**
Worker's Comp.			
	State	Statutory	
	Applicable Federal	Statutory	
Employer's Liability			
	Bodily Injury by accident	$500,000	each accident
	Bodily Injury by disease	$500,000	each employee
	Bodily Injury	$500,000	policy limit

C. Commercial General Liability Insurance.

(1) The Contractor shall provide Commercial General Liability Insurance in a policy form providing no less comprehensive and no more restrictive coverage than provided under the ISO® form CG00010798 or newer with standard exclusions "a" through "o" and with minimum limits as provided below. Any other exclusions that operate to contradict or materially alter the standard exclusions shall be specifically listed on the certificate of insurance and shall be subject to the prior written approval of the City Attorney.

Coverage	Min Amt	Notes
General	$2,000,000	Aggregate
Products and Completed Operations	$2,000,000	Aggregate
Personal and Advertising Injury	$1,000,000	
Each Occurrence	$1,000,000	
Fire Damage Limit	$ 100,000	any one fire
Medical Damage Limit	$ 10,000	any one person

(2) The required Commercial General Liability Insurance shall also include the following:

- Coverage for all premises and operations
- Endorsement to provide the general aggregate per project endorsement
- Personal and advertising injury included
- Operations by independent contractors included
- Contractual liability coverage included
- X.C.U. Coverage including coverage for demolition of any building or structure, collapse, explosion, blasting, excavation and damage to property below the surface of ground.
- Any fellow employee exclusions shall be deleted
- Coverage shall not contain an absolute pollution exclusion, and applicable remaining coverage shall apply for pollution exposures arising from products and completed operations.
- Coverage for products and completed operations maintained for duration of work and shall be maintained for a minimum of three years after final acceptance under the Contract or the warranty period for the same whichever is longer, unless modified in any Special Provisions.
- Contractual Liability coverage shall include contractually assumed defense costs in addition to any policy limits.

(3) If work is to be performed within 50 feet of any railroad property and affecting any railroad bridge or trestle, tracks, road beds, tunnel, underpass or crossing, Railroad Contractual Liability Endorsement (ISO® form CG24170196 or newer).

(4) City may at its sole option, and in lieu of being additional insured on the Contractor's policy, by written requirement in the Special Provisions or by written change order, require Contractor to provide a separate Owner's Protective liability policy. The premium cost to obtain such insurance shall be as paid as provided in the Special Provision or change order, with any related cost savings as reasonably determined by the City being reimbursed or paid to the City.

D. Vehicle liability insurance coverage.

- The Contractor shall provide reasonable insurance coverage for all owned, non-owned, hired and leased vehicles with specific endorsements to include contractual liability coverage and delete any fellow employee exclusion.

- If specifically required in the Special Provisions, the required coverage shall also include an endorsement for auto cargo pollution (ISO® form CA 99 48).

E. Railroad Protective Liability. If work is to be performed within 50 feet of any railroad property and affecting any railroad bridge or trestle, tracks, road beds, tunnel, underpass or crossing or otherwise required by the Special Provisions or applicable requirements of an affected railroad, the Contractor shall provide Railroad Protective Liability Insurance naming the affected railroad/s as insured with

minimum limits for bodily injury and property damage of $2,000,000 per occurrence, $6,000,000 aggregate, or such other limits as required in the Special Provisions or by the affected railroad. The original of the policy shall be furnished to the railroad and a certified copy of the same furnished to the City Attorney's office prior to any related construction or entry upon railroad premises by the Contractor or for work related to the Contract.

F. **Umbrella or Excess Insurance.** The Contractor shall provide Umbrella or Excess insurance coverage with minimum coverage limits of $3,000,000 each occurrence and aggregate.

G. **City included as Insured on Contractor's Policy – Endorsements required.**
The Contractor shall provide adequate written documentation, including applicable ACORD certificates, declarations pages or other acceptable policy information demonstrating that the City is included as an additional insured along with the Contractor with respect to all of the coverages required in this "Section 2A Insurance Requirements," except for applicable Worker's Compensation coverage, to include all work performed for the City and specifically including, but not limited to, any liability caused or contributed to by the act, error, or omission of the Contractor, including any related subcontractors, third parties, agents, employees, officers or assigns of any of them. The documentation or endorsement shall specifically include the city as an additional insured for purposes of Products and Completed Operations. The inclusion of the City as additional insured shall be for coverage only on a primary basis for liability coverage, and no coverage shall contain a policy or other restriction or attempt to provide restricted coverage for the City, whether on an excess, contributory or other basis regardless of any other insurance coverage available to the City.

3. CONTRACTOR'S INDEMNITY – CONTRACTUAL LIABILITY INSURANCE

A. To the same extent as specified for minimum coverage requirements in Section 2 above, the required insurance shall include contractual liability coverage to include indemnification and hold harmless agreements and provisions in the related Contract Documents, specifically including the following provision:

(1) To the fullest extent permitted by law, Contractor shall defend, indemnify, and hold harmless the City, its officers, agents, employees, volunteers and consultants from and against any and all claims, damages, losses, costs, and expenses, including but not limited to attorney's fees and costs arising out of or related to the Contract or the Contractor's activities, errors, or omissions related to the Contract including liabilities or penalties imposed by applicable, law, rule or regulation in connection therewith; provided that such claims, damages, losses, costs, and expenses, including but not limited to attorney's fees and costs:

- is attributable to bodily injury, sickness, disease or death, or to injury to or destruction of tangible property including the loss of use therefrom, and

- is caused in whole or in part by any act or omission of the Contractor, any subcontractor, agent, officer, employee, or assigns of the same or by anyone directly or indirectly employed by any of them or anyone for whose acts any of them may be liable, regardless of whether or not it is caused in whole or in part by a party indemnified hereunder.

(2) Such indemnification shall not be construed to negate, abridge, limit or otherwise reduce any other right or obligation of indemnity which would otherwise exist as to any party or person described in this section.

B. In any and all claims by any employee (whether an employee of the Contractor or subcontractor, or their respective agents or assigns by anyone directly or indirectly employed by any of them or anyone for whose acts any of them may be liable as an employer) in whole or in part against the City, its officers, agents, employees, volunteers or consultants, the above indemnification shall not be limited in any way by the amount of damages, compensation, benefits or other contributions payable by or on behalf of a the employer under Worker's Compensation statutes, disability benefit acts, or any other employee benefit or payment acts as the case may be.

C. The obligations of indemnification herein shall not include or extend to:

(1) Any outside engineer's or architect's professional errors and omissions involving the approval or furnishing of maps, drawings, opinions, reports, surveys, change orders, designs or specifications within the scope of professional services provided to the City and related to the Contract; and

(2) Any claims arising out of the negligence of the City to the extent the same is the sole and proximate cause of the injury or damage so claimed.

D. In the event of any litigation of any such claims shall be commenced against the City, Contractor shall defend the same at Contractor's sole expense upon notice thereof from the City. Contractor shall notify the insuring company that the City reserves and does not waive any statutory or governmental immunity and neither Contractor, nor Contractor's counsel whether employed by Contractor or by an insurer on behalf of the Contractor shall waive such defenses or enter into any settlement or other disposition requiring waiver of any defenses or immunity of the City without the express written consent of the City.

4. CONTRACTOR'S INSURANCE FOR OTHER LOSSES.

A. Contractor shall assume full responsibility for all loss or damage from any cause whatsoever to any tools owned, rented or used in connection with the Contract including any tools, machinery, equipment, storage devices, containers, sheds, temporary structures, staging structures, scaffolding, fences, forms, braces, jigs, screens, brackets, vehicles and the like owned or rented by Contractor, or Contractor's agents, subcontractors, suppliers, or employees.

B. In connection with the above, Contractor shall cause or require any applicable insurance related to physical damage of the same to provide a waiver of a right of subrogation against the City.

5. NOTIFICATION IN EVENT OF LIABILITY OR DAMAGE.

A. The Contractor shall promptly notify the City in writing and provide a copy of all claims and information presented to any of Contractor's insurance carrier/s upon any loss or claim or upon any occurrence giving rise to any liability or potential liability related to the Contract or related work. The notice to the City shall include pertinent details of the claim or liability and an estimate of damages, names of witnesses, and other pertinent information including the amount of the claim, if any.

B. In the event the City receives a claim or otherwise has actual knowledge of an any loss or claim arising out of the Contract or related work and not otherwise known to or made against the Contractor, the City shall promptly notify the Contractor of the same in writing, including pertinent details of the claim or liability; Provided, however the City shall have no duty to inspect the project to obtain such knowledge, and provided further that the City's obligations, if any, shall not relieve the Contractor of any liability or obligation hereunder.

6. PROPERTY INSURANCE/ BUILDER'S RISK.

A. The Contractor shall provide property insurance (a/k/a Builder's Risk or installation Floater) on all Projects involving construction or installation of buildings or structures and other projects where provided in the Special Provisions. Such insurance shall be provided in the minimum amount of the total contract sum and in addition applicable modifications thereto for the entire work on a replacement cost basis. Such insurance shall be maintained until the City completes final acceptance of the work as provided in the Contract. Such insurance shall be written and endorsed, where applicable, to include the interests of the City, Contractor, Subcontractors, Sub-subcontractors in the related work. The maximum deductible for such insurance shall be $5,000 for each occurrence, which deductible shall be the responsibility of the Contractor. Such insurance shall contain a "permission to occupy" endorsement.

B. All related Property Insurance shall be provided on a “Special Perils” or similar policy form and shall at a minimum insure against perils of fire including extended coverage and physical loss or damage including without limitation or duplication of coverage: flood, earthquake, theft, vandalism, malicious mischief, collapse, and debris removal, including demolition whether occasioned by the loss or by enforcement of applicable legal or safety requirements including compensation or costs for City’s related costs and expenses (as owner) including labor required as a result of such loss.

C. All related Property Insurance shall include coverage for falsework, temporary buildings, work stored off-site or in-transit to the site, whether in whole or in part. Coverage for work off-site or in-transit shall be a minimum of 10% of the amount of the policy.

D. The Contractor’s Property Insurance shall be primary coverage for any insured loss related to or arising out of the Contract and shall not be reduced by or coordinated with separate property insurance maintained by the City.

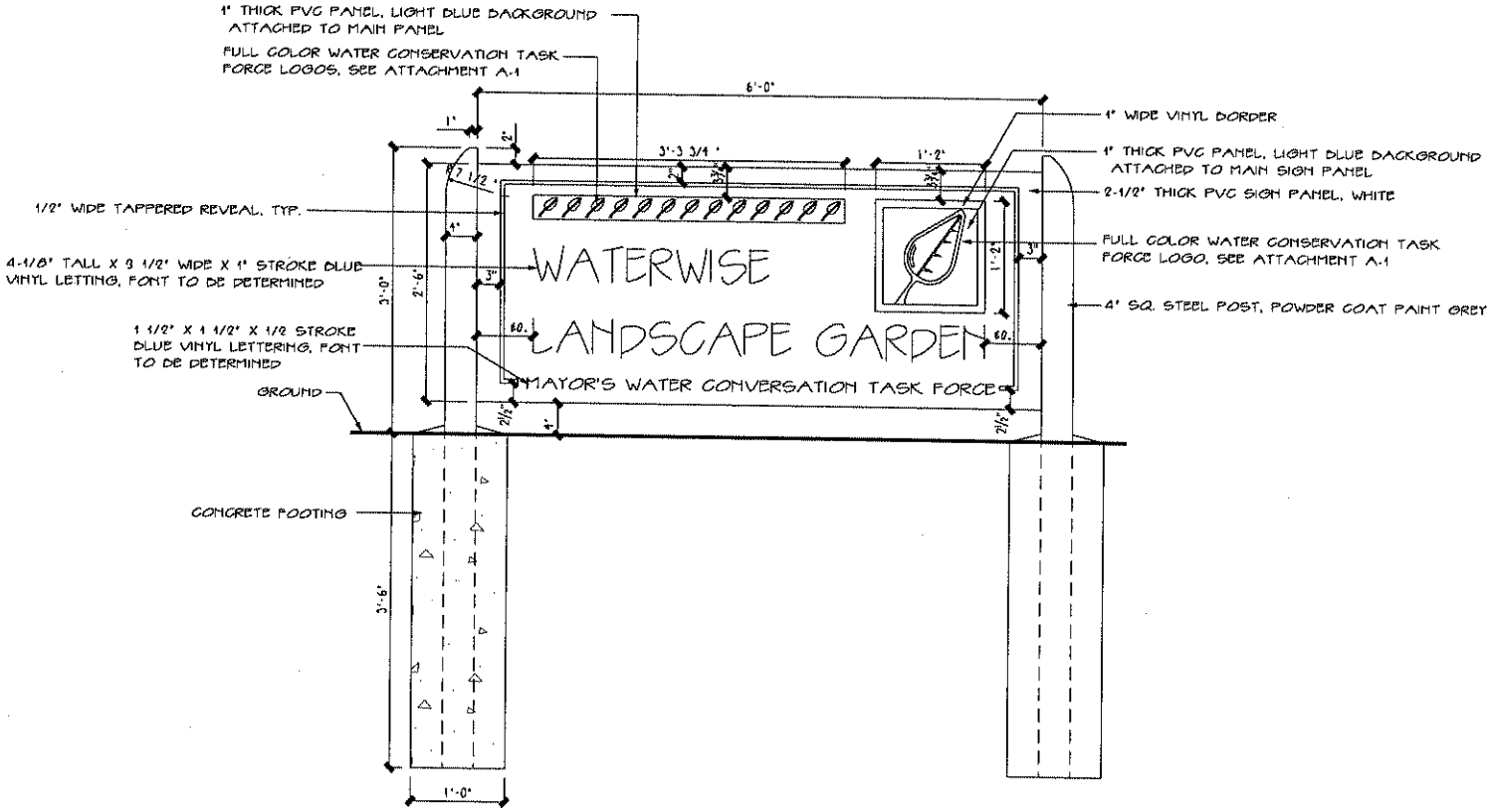

NOTE:
DESIGN IS ON BOTH SIDES OF THE SIGN

SIGN PLACEMENT SHALL BE STAKED PRIOR TO INSTALLATION

SIGN TYPE 'A'

SCALE: NOT TO SCALE

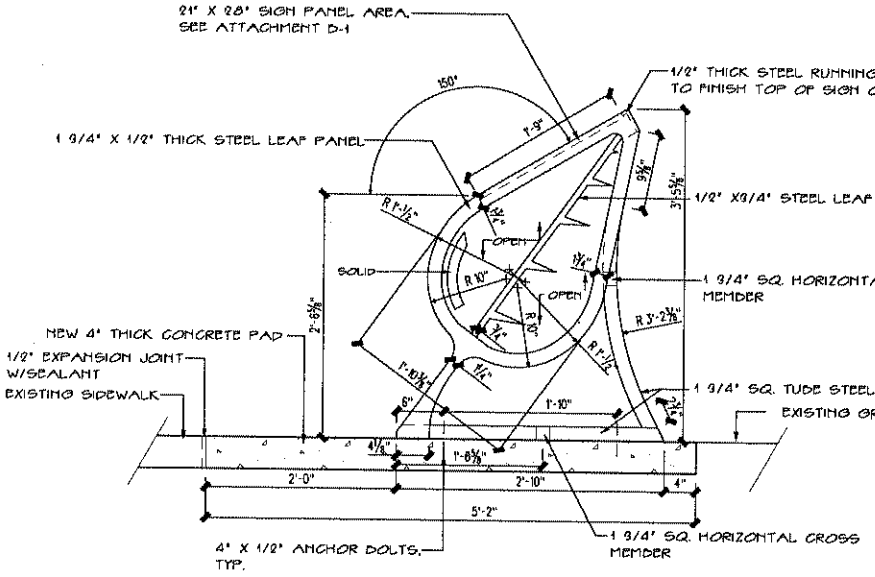

SIDE VIEW

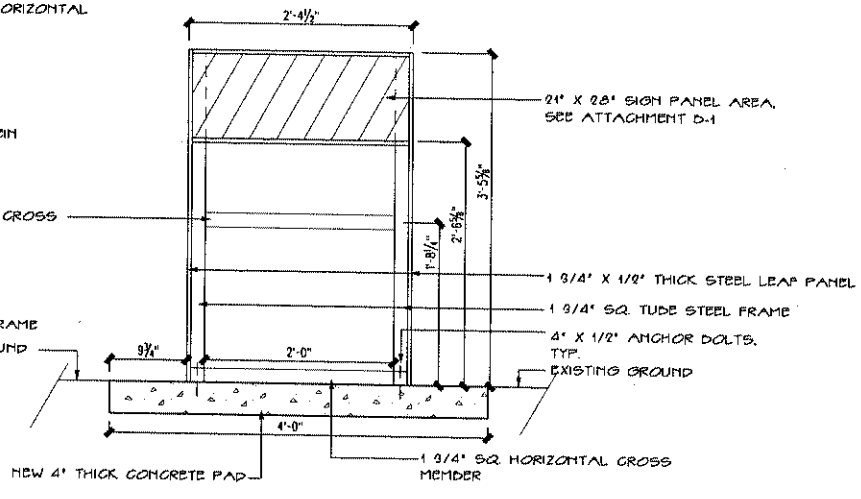

FRONT VIEW

SIGN TYPE 'B'

SCALE: 1/2" = 1'-0"

SPECIAL PROVISIONS - GENERAL

GENERAL
The 1999 City of Lincoln Standard Specifications for Municipal Construction will govern in the construction of this project. Certain articles of the Standard Specifications have been amended OR added by the Special Provisions.

The items of work identified in the quote request will be measured as lump sum items as listed. The lump sum prices shall include all materials, labor, tools, expendable equipment, construction equipment and machinery, utility and transportation services and all incidental items necessary to perform and complete the work required. Any items required to complete the work that is not specifically identified shall be considered subsidiary to the work, and no separate payment will be made.

Mobilization shall not be measured for payment but shall be considered subsidiary to other pay items

SECTION 01100 - SUMMARY

PART 1 - GENERAL

1.1 RELATED DOCUMENTS

A. Drawings and other provisions of the Contract, including City of Lincoln General and Supplementary Conditions apply to this Section.

1.2 WORK COVERED BY CONTRACT DOCUMENTS

A. Project Identification: WCTF Waterwise Landscape Signs

1. Project Location: Lincoln Water System, 2021 N. 27th Street, Lincoln, Nebraska 68508.
2. Owner: City of Lincoln, Lincoln Water System, Lincoln, Nebraska, 68503.

B. Project Coordinator: Mayor's Water Conservation Task Force, John Williams, (402)458-5987.

C. The Work consists of fabrication and installation of new signs.

1.3 CONTRACT

A. Project will be constructed under a single construction contract.

1.4 CONTRACTOR USE OF PREMISES

A. Use of the Site: Limit use of the premises to work in areas indicated. Confine operations to areas within limits indicated. Do not disturb portions of the site beyond the area in which the Work is indicated.

1. Business Owner Occupancy: Allow for Business Owner's occupancy and use by the public.
2. Driveways and Entrances: Keep driveways and entrances serving the premises clear and available to the Owner, the Owner's employees, and emergency vehicles at all times. Do not use these areas for parking or storage of materials. Schedule deliveries to minimize space and time requirements for storage of materials and equipment on-site.
3. Sidewalks: Keep sidewalks serving the adjacent businesses clear and available to Owner, Owners employees, and business patrons.
4. The Contractor is not allowed to use the business Owner's restroom facilites.

1.5 OCCUPANCY REQUIREMENTS

A. Public Use and Occupancy of Adjacent Properties: The Public will continue to use the walkways and access the Lincoln Water System offices near which the work is to occur. Cooperate with the City during Construction operations to minimize conflicts and facilitate use of the adjacent areas by others.

1. Obtain all necessary permits as required to conduct all construction operations.

1.6 WORK SEQUENCE

A. The Contractor is not permitted to start work and allow the work to sit idle.

PART 2 - PRODUCTS (Not Used)

PART 3 - EXECUTION (Not Used)

END OF SECTION

SECTION 10431 - SIGNS

PART 1 - GENERAL

1.1 RELATED DOCUMENTS

A. Drawings and general provisions of the Contract, including General and Supplementary Conditions apply to this Section.

1.2 SUMMARY

A. This Section includes the following:

1. Dimensional characters (letters and characters) for exterior use.
2. Signage accessories.
3. PVC sign material
4. Interpretive Signs

B. Related Sections include the following:

1. Division 5 Section "Metal Fabrications" for signage backgrounds and supports.

1.3 SUBMITTALS

A. Product Data: Include construction details, material descriptions, dimensions of individual components and profiles, and finishes for each type of sign.

B. Shop Drawings: Include plans, elevations, and large-scale sections of typical members and other components. Show mounting methods, grounds, mounting heights, layout, spacing, reinforcement, accessories, and installation details.

1. Provide message list for each sign, including large-scale details of wording, lettering, and artwork.

C. Samples for Initial Selection: For each type of sign material indicated that involves color selection.

D. Samples for Verification: For each type of sign, include the following Samples to verify color selected:

1. Dimensional Characters: Full-size Samples of each type of dimensional character (letter and number) required. Show character style, material, finish, and method of attachment.
2. Casting: Show representative texture, character style, spacing, finish, and method of attachment.
3. Approved samples will not be returned for installation into Project.

1.4 PROJECT CONDITIONS

A. Field Measurements: Where sizes of signs are determined by dimensions of surfaces on which they are installed, verify dimensions by field measurement before fabrication and indicate measurements on Shop Drawings.

1.5 COORDINATION

A. For signs supported by or anchored to permanent construction, advise installers of anchorage devices about specific requirements for placement of anchorage devices and similar items to be used for attaching signs.

1. For signs supported by or anchored to permanent construction, furnish templates for installation of anchorage devices.

B. Coordinate location of remote transformers with building construction. Ensure that transformers are accessible after completion of Work.

PART 2 - PRODUCTS

2.1 MANUFACTURERS

A. In other Part 2 articles where titles below introduce lists, the following requirements apply for product selection:

1. Available Manufacturers: Subject to compliance with requirements.

2.2 PANEL SIGNS (sign type A)

A. Sign Panel: Provide PVC sign panel that complies with requirements indicated for materials, thicknesses, finishes, colors, designs, shapes, sizes, and details of construction.

B. Applied Copy: Die-cut characters from vinyl film of nominal thickness of 3 mils (0.076 mm) with pressure-sensitive adhesive backing.

C. Water Conservation Task Force Logo: Die-cut from vinyl film of nominal thickness of 3 mils with pressure-sensitive adhesive backing. Colors shall match the sample as provided in attachment A-1.

2.3 INTERPRETIVE SIGN

A. Sign Panel: Basis of Design - Provide full color graphics and text as shown in the sample (attachment B-1). Sample is a draft copy only and the successful bidder shall work with the Water Conservation Task Force contact to finalize the graphics and copy. Bidders shall include any additional fee for graphic design in their quote. No additional payment shall be made.

B. Size: Available area for interpretive sign is 21″ x 28″.

C. Materials: Interpretive sign shall be a high-pressure laminate material, 1/8″ minimum thickness, and applied over phenolic core or similar. Edges shall be finished to not allow tampering or delamination. If necessary, the sign shall be placed in a frame and attached to the pedestal. Sign shall be resistant to graffiti and able to be cleaned with readily available cleaners.

D. Manufacturers: Companies offering products similar to what is required include:
   1. Panier,
   2. Envirosigns, 1-888-492-5377

2.4 ACCESSORIES

D. Mounting Methods: Use concealed fasteners and/or silicone adhesive fabricated from materials that are not corrosive to sign material and mounting surface.

E. Anchors and Inserts: Provide nonferrous-metal or hot-dip galvanized anchors and inserts for exterior installations and elsewhere as required for corrosion resistance. Use toothed steel or lead expansion-bolt devices for drilled-in-place anchors. Furnish inserts, as required, to be set into concrete or masonry work.

2.5 FINISHES, GENERAL

F. Protect mechanical finishes on exposed surfaces from damage by applying strippable, temporary protective covering before shipping.

G. Appearance of Finished Work: Variations in appearance of abutting or adjacent pieces are acceptable if they are within one-half of range of approved Samples. Noticeable variations in same piece are not acceptable. Variations in appearance of other components are acceptable if they are within range of approved Samples and are assembled or installed to minimize contrast.

PART 3 - EXECUTION

3.1 EXAMINATION

A. Examine substrates, areas, and conditions, with Installer present, for compliance with requirements for installation tolerances and other conditions affecting performance of work.

B. Verify that items, including anchor inserts, provided under other sections of Work are sized and located to accommodate signs.

C. Examine supporting members to ensure that surfaces are at elevations indicated or required to comply with authorities having jurisdiction and are free from dirt and other deleterious matter.

D. Proceed with installation only after unsatisfactory conditions have been corrected.

3.2 INSTALLATION

A. General: Locate signs and accessories where indicated, using mounting methods of types described and in compliance with manufacturer's written instructions.

   1. Install signs level, plumb, and at heights indicated, with sign surfaces free from distortion and other defects in appearance.

B. Bracket-Mounted Units: Provide brackets, fittings, and hardware as shown on the drawing appropriate for mounting signs. Attach brackets and fittings securely between masonry and the break columns with concealed fasteners and anchoring devices to comply with manufacturer's written instructions.

C. Dimensional Characters: Mount characters using standard fastening methods recommended in writing by manufacturer for character form, type of mounting, wall construction, and condition of exposure indicated. Provide heavy paper template to establish character spacing and to locate holes for fasteners.

3.3 CLEANING AND PROTECTION

A. After installation, clean soiled sign surfaces according to manufacturers written instructions. Protect signs from damage until acceptance by Owner.

END OF SECTION

limitations, performing dil
tended periods of drought.

Attachment "A-1"

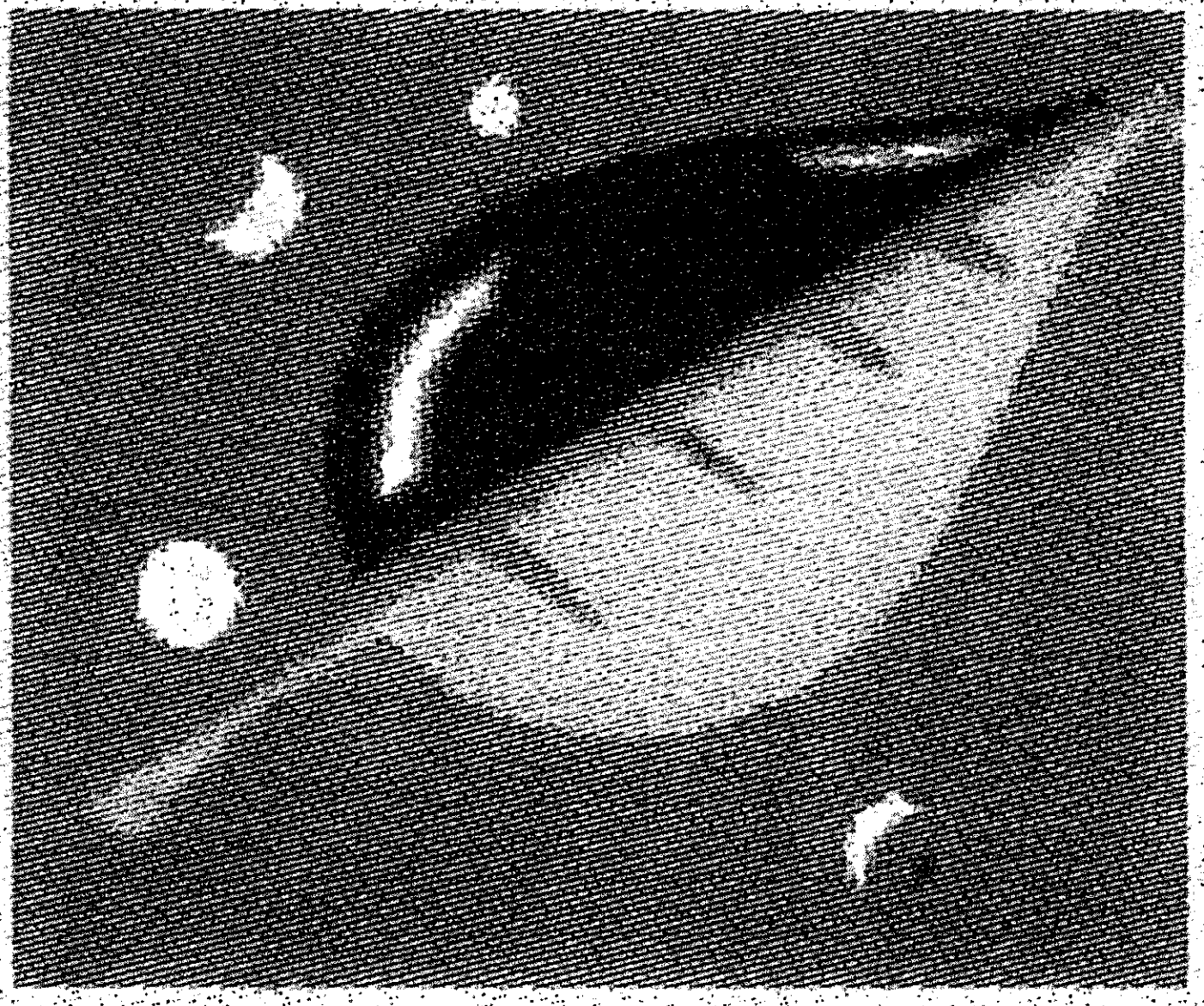

Attachment "B-1"

background

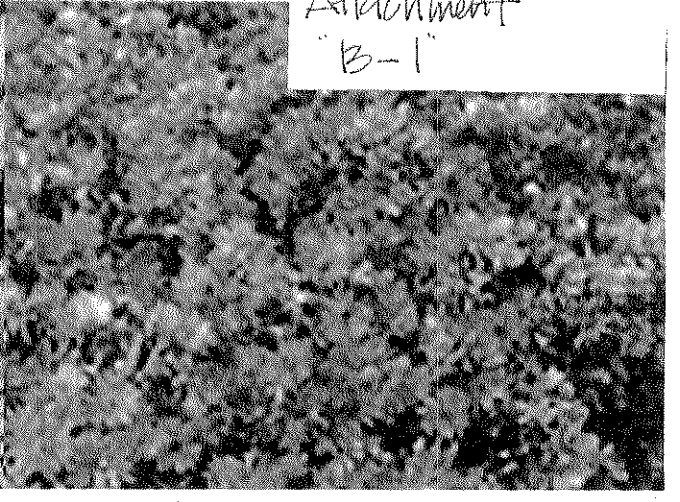

process

The development of the landscape display was a cooperative effort between the Water Conservation Task Force (WCTF), Lincoln Water Service staff (LWS), Urban Development Department, Parks and Recreation, and neighborhood residents.

The planning and design of the garden occurred during the winter of 2000 - 2001.

Planting began in the spring of 2001 and was completed in the fall of 2001. Participants included WCTF members, LWS staff and children from the Parks Department daycamps.

design

A landscape plan was developed by WCTF members and utilized plant materials that were listed in the taks forces water wise plant palette. Tree, shrubs, perennials, and turf grasses were selected based on their adaptivity to the Great Plains including the extreem cold and heat as well as drought conditions.

The design concept focuses primarily on plant groupings that provide seasonal color, interesting textures and contrast, low water requirements, and minimal maintenance.

Additionally, the design incorporates the existing plant materials and uses them as both backdrop and definition for the new plantings.

Walkways allow visitors a chance to interact with the plants. Benches located along the walkway provide opportunities for resting and conversation. The architectural element of an arbor provides a rustic framework for the displaying of vines.

Maintenance of the display garden consists of seasonal clean up, mulching and weeding.

results

Since the completion of the water wise landscape and display garden, visitors have been given the opportunity to see how different water wise plants adapt with summer heat and drought conditions.

The plant groupings also provide different displays depending on the day, month, and season.
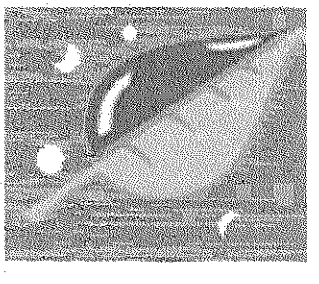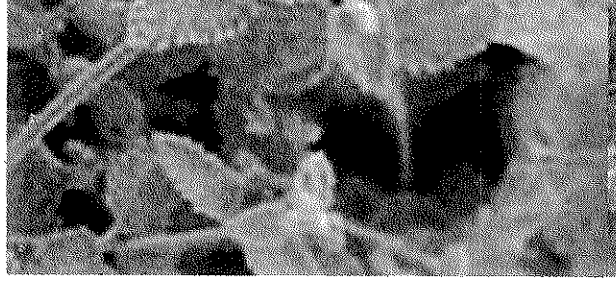
Although the plant material displayed has been selected based on performance under drought conditions, they do have their limitations, performing differently to extended periods of drought.