AGENDA FOR THE WEST HAYMARKET JOINT PUBLIC AGENCY (JPA)
TO BE HELD TUESDAY, December 18, 2012 AT 3:00 P.M.

CITY-COUNTY BUILDING
555 S. 10TH STREET
CITY COUNCIL CHAMBERS ROOM 112
LINCOLN, NE 68508

1. Introductions and Notice of Open Meetings Law Posted by Door (Chair Beutler)

2. Public Comment and Time Limit Notification Announcement (Chair Beutler)

   Individuals from the audience will be given a total of 5 minutes to speak on specific items listed on today's agenda. Those testifying should identify themselves for the official record.

3. Approval of the minutes from the JPA meeting held December 6, 2012 (Chair Beutler)
   - (Staff recommendation is for the JPA Board to approve the minutes as presented)

4. Approval of November 2012 Payment Registers (Steve Hubka)
   - Public Comment
   - (Staff recommendation is for the JPA Board to approve the payment registers)

5. Review of the November 2012 Expenditure Reports (Steve Hubka)
   - Public Comment

6. WH 12-67 Resolution to approve the Third Amendment to Master Development Agreement between the West Haymarket Joint Public Agency and BNSF Railway Company to provide for a refund of the JPA's advance payment in excess of BNSF's actual cost for (1) grading and flagging and (2) compressing the timeline, which results in refund amounts of $499,162 and $ 2,053,516 respectively. (Paula Yancey)
   - Public Comment
   - (Staff recommendation is for the JPA Board to approve the resolution)

7. WH 12-68 Resolution to approve the Contract Agreement between the West Haymarket Joint Public Agency and Hawkins Construction Co. pursuant to Bid No. 12-291 for construction of the West Haymarket Parking Lot, Festival Space and Pedestrian Bridge for the sum of $7,270,489.12. (Paula Yancey)
   - Public Comment
   - (Staff recommendation is for the JPA Board to approve the resolution)

8. WH 12-69 Resolution to approve the Contract Agreement between the West Haymarket Joint Public Agency and Nebraska Nursery & Color Garden pursuant to Bid No. 12-296 for installation of the West Haymarket Parking Lot, Festival Space and Pedestrian Bridge landscaping for the sum of $323,540.32. (Paula Yancey)
   - Public Comment
   - (Staff recommendation is for the JPA Board to approve the resolution)

*If the conflicting meeting ends early, this meeting will be held in City Council Chambers Room 112.

9. WH 12-70 Resolution to Amend the Capital Budget for the West Haymarket Joint Public Agency by adopting the proposed total program summary changes to the budget. (Steve Hubka)
    - Public Comment
    - (Staff recommendation is for the JPA Board to approve the resolution)

10. WH 12-71 Resolution to approve Change Order No. 3 to the Final Guaranteed Maximum Price Amendment to the Amended and Restated Construction Manager at Risk Contract with M.A. Mortenson for buildings core switches and VOIP System, IPTV System and TV displays and complete installation of the exterior naming rights signage for an additional contract amount of $2,181,973 and to establish $159,111,219 as the revised amount the contract sum (GMP) shall not exceed. (Paula Yancey)
    - Public Comment
    - (Staff recommendation is for the JPA Board to approve the resolution)

11. Set Next Meeting Date: Friday, January 11, 2013 at 3:00 p.m. in County-City Building Room 303*

12. Motion to Adjourn

*If the conflicting meeting ends early, this meeting will be held in City Council Chambers Room 112.

WEST HAYMARKET JOINT PUBLIC AGENCY (JPA)
Board Meeting
December 6, 2012

Meeting Began At: 3:00 P.M.

Meeting Ended At: 3:42 P.M.

Members Present: Chris Beutler, Eugene Carroll, Tim Clare

Item 1 -- Introductions and Notice of Open Meetings Law Posted by Door

Chair Beutler opened the meeting with introduction of the Board members. He advised that the open meetings law posted at the back of the room is in effect.

Item 2 -- Public Comment and Time Limit Notification

Beutler welcomed public comment. He stated that individuals from the audience will be given a total of five minutes to speak on specific items listed on today's agenda. Those testifying should identify themselves for the official record and sign in.

Item 3 -- Approval of the minutes from the JPA meeting held November 2, 2012

Beutler asked for corrections or changes to the minutes of the November 2, 2012 meeting. Being none, Clare moved approval of the minutes. Carroll seconded the motion. Motion carried 3-0.

Item 4 – West Haymarket Progress Report

Paula Yancey, PC Sports, distributed a monthly information packet (attached hereto) on the status of the Pinnacle Bank Arena and associated infrastructure projects.

Yancey reviewed the participation numbers, indicating that through October-November of 2012 there have been 2,065 workers on site. This includes both engineering and professional services personnel. Of the total workers, 1,199 (or 58%) live in Lincoln/Lancaster County and another 630 (or 31%) live in Nebraska outside Lancaster County. Only 236 (or 11%) were from outside Nebraska. Responding to an inquiry from Clare, John Hinshaw reported that these numbers should remain similar or include even more local workers as the project moves to inside finishes.

Looking at just the construction employees using certified payrolls or Davis Bacon, there have been 1,727 workers on site. Of the total, 1,056 (or 59%) of the workers are from Lincoln/Lancaster County, 575 (or 32%) were from Nebraska, and only 153 (or 9%) were from outside of Nebraska.

Company participation numbers show 316 firms awarded contracts. Out of the total firms, 242 (or 77%) were Nebraska firms and only 74 (or 23%) were outside Nebraska. That equates to $140 million out of a total $193 million awarded to firms that actually have an address in Nebraska.

On the infrastructure progress, Yancey displayed an image of the east side landing of the pedestrian bridge. This is the highest point where the pedestrian bridge will connect to the arena. The image is from the embankment and shows the structure in place. A second image shows a crew installing the MSE wall that supports the embankment for the pedestrian bridge. The embankment behind the MSE wall contains 81,582 cubic yards of dirt, which is enough dirt to stretch 2 foot deep down "O" Street from the Harris Overpass to 84th Street. It is surcharging to allow proper settlement over the next several months. The next image shows the backfill completion around the pedestrian bridge/arena plaza shared pier. This project was awarded in phases, including a rough grading package that included the embankment and this one pier. The reason was that this pier was important and timing critical as it supports the elevated plaza being constructed by Mortenson and the pedestrian bridge structure will rest on this pier.

Yancey continued with a slide on the 7th and "Q" Street intersection, which was poured today and plans to open to the public next week. This will help with some congestion issues in the arena area. Another Core Area Roadway Project, Pinnacle Arena Drive looking to the north from "P" Street, was shown on the next slide. The nice weather has allowed progress on these projects ahead of schedule, and they will be pushing to make as much progress as possible before bad weather arrives. Regarding the area with Amtrak showing on the left, Clare questioned plans for that area. Yancey explained that there will eventually be a finished parking lot, streetscape, and a bike lane along Pinnacle Drive. The parking showing in the picture is temporary. Responding to Carroll, Yancey confirmed that there is a winter clause in the contract for paving.

The Parking Deck #1, the Hausmann Dunn Project, is on schedule. An included image shows the first pieces of precast erected for that garage.

The District Energy Commission piping is being installed immediately adjacent to the parking garage foundations. This connects to the arena and canopy lofts, as well as the future hotel project. A second image shows the piping down "Q" Street that will eventually connect the rail yard block.

An aerial picture taken on November 15 shows the enclosure of the arena and the roofing installation. A second aerial of the entire Haymarket Project site shows the progress overall. There is a topping out ceremony scheduled for next week. The event is by invitation only, but the general public has a chance to sign the final steel beam hoisted into place for the arena during tonight's Husker basketball game at the Bob Devaney Center and from 4 to 7 p.m. at the December 7 First Friday Artwalk at Iron Horse Park, 7th and "Q" Street.

John Hinshaw, Mortenson Construction, reported on the Pinnacle Bank Arena progress. Hinshaw reported that they have worked 175 consecutive days without a recordable safety incident. Next week they will have a celebration for six months or 180 days without an incident. It is a large milestone achieved by the workforce, with an average of approximately 300 craft workers daily. Responding to an inquiry from Clare, Hinshaw estimated that national averages range in about 2-3 incidents for 200,000 hours worked. There are many different averages out there, but six months is well below any average without an incident.

As Hinshaw displayed another image, he detailed that the concrete superstructure continues with the image showing the pouring of the inner bowl footings. They continue with some slab on metal grade and slab on metal deck work, which is to be finished this month. The garage foundation work will be completed next week.

A summary of the milestones achieved include:

- 2nd Phase of structural precast has been started in the lower bowl
- Main roof structure is completed
- Metal deck on the main roof is completed
- All phases of exterior enclosure (roofing, metal panel work, curtainwall, etc.) are underway

Hinshaw showed a series of slides on the arena construction work, including:

- Erecting structural steel on east side of arena – left side shows glass and glazing where tracks were not and right side shows steel where tracks were and where arena is coming up now
- Worker detailing the curtainwall along "R" Street or entrance side of the arena
- Ironworker detailing the final connections on the structural roof steel
- Zinc metal panel installation facing south that will eventually wrap the entire drum. The red and green showing on the arena is not the final look. The red showing in the image is a water vapor barrier.
- Painter shown working on the interior corridor wall
- Waldinger workers installation of ductwork that is being flow into place -- the bowl duct is 88" in diameter.
- Falewich workers installing exterior sheathing on studs around arena perimeter
- Early morning deck shot of Mortenson workers installing concrete in main concourse to the east
- Actual finish on south smaller roof – main bowl roof is 30-40% complete. Expect main roof completion in two weeks. Smaller roof completion will continue through January.

Clare asked about the timing of the project. Hinshaw responded that they are on time. Yancey offered that they were also on budget.

Jane Kinsey, Watchdogs of Lincoln Government, questioned whether the same companies are being used that were used on the Antelope Valley Project, in which there were some issues. Beutler responded that whoever the contractors are they will be held responsible for doing good work. Even though there were issues on Antelope Valley, they were corrected at no additional cost to the City. Yancey responded that Mortenson is doing the arena construction and was not involved with Antelope Valley. She further detailed that third party inspectors were hired to oversee the work being completed so there are several layers of inspection. Beutler noted that there are other contractors involved on the infrastructure work surrounding the arena. Some of those may have been involved in Antelope Valley. He referred Kinsey to the Public Works Department for more details.

Item 5 -- Approval of October 2012 Payment Register

Steve Hubka, City Finance Director, presented the payment register for October 2012. Along with the Public Works bill, it is a total of $12,963,268. As the work activity increases, the expenditures are also increasing.

Clare asked if we were on budget and if we were obtaining appropriate documentation from an audit standpoint. Hubka confirmed the project is on budget and that they are gathering the necessary signatures and/or documentation from an audit standpoint.

There was no public comment. Carroll moved approval of the payment register. Clare seconded the motion. Motion carried 3-0.

Item 6 -- Review of the October 2012 Expenditure Reports

Steve Hubka presented the job cost and operating expenditure report for October 2012. Hubka will be presenting some minor adjustments or reallocations at the next meeting. Clare asked what was considered minor changes. Hubka explained these are recognizing some additional funding sources and moving some dollars between categories. There are no changes that will affect the overall project budget.

There was no public comment.

Item 7 -- WH 12-63 Resolution to approve Change Order No. 2 to the Final Guaranteed Maximum Price Amendment to the Amended and Restated Construction Manager at Risk Contract with M.A. Mortenson for inclusion of hand dryers into their scope of work for an additional contract cost of $126,255 and to establish $156,929,246.00 as the revised amount of the Contract Sum.

Paula Yancey explained that this resolution was to approve Change Order No. 2 to the Mortenson/Hampton contract for $126,255. This is to upgrade from paper towel dispensers to electric hand dryers in the public rest areas. After further evaluation, SMG and JPA feels like the savings in operational expenses and cleanup, as well as diversion of paper towel waste from the landfill, make this a better solution. The additional funding will come from the arena contingency dollars and will increase the GMP amount to $156,929,246. Clare wondered why this was not anticipated earlier and what period would be needed to recoup the initial investment. Yancey explained that in the initial design cost of the building the goal was to stay under the $150 million GMP. However, looking at long-term savings and how well we were doing currently on the budget, it was felt to be a worthwhile upgrade. Studies have shown it may pay for itself in 1.5 to 2 years. Clare asked again where the dollars would be from and, if the contingency fund, the balance remaining. Yancey confirmed it was from the contingency fund and that there is a balance of over $5 million.

Jane Kinsey questioned the high expense for the hand dryers. Yancey explained there are a large number of public restrooms and this accounts for several high efficiency Dyson dryers in each one to cover the anticipated large volume of people using the dryers. This expense includes the power needed, the blocking in the walls to hang the dryers, the procurement, and subsequent installation of the dryers. The total cost is $126,255. Kinsey stated she had used these dryers in some of the big cities and they appear to be the latest thing.

Being no public comment, Clare moved approval of the resolution. Carroll seconded the motion. Motion carried 3-0.

Item 8 -- WH 12-64 Resolution to approve the Agreement between the West Haymarket Joint Public Agency and Donald Lipski for Fabrication, Engineering, and Installation of Art Work to be known as the "Candy Box" at the Pinnacle Bank Arena.

Paula Yancey explained that this resolution was to approve an agreement with the artist for fabrication and installation of his piece of art for the arena lobby entitled "The Candy Box." The concept image was shown. The artist, Donald Lipski, will mold several pieces of chocolate in Lincoln or Nebraska focused imagery. Those pieces will be defined throughout the design process over the next several months. Mr. Lipski was selected by the West Haymarket Public Art Task Force. He was recommended for approval through the RFP process. The contract amount is $317,000 funded entirely from the Civic

Art budget. There is a total of $105 million included in the approved JPA budget for civic art. At Clare's request, Yancey detailed that this art piece is approximately 20' wide by 16' foot tall. The initial concept was to include eight to ten select pieces disbursed throughout the art. Some ideas shared were to include a diploma to represent the University, an animal to represent the agriculture in the State, some sort of sports ball; as well as various other items like a train or cowboy boot or a sower as on the Capitol Building. The exact components will be reviewed further to be sure they reflect the desired themes of Nebraska and Lincoln. Mr. Lipski was recently displaced from his home along the east coast due to Hurricane Sandy so it took a little bit to get the contract signed for today's meeting. His studio is okay and no delays are expected. Mr. Beutler asked Yancey to pass along best wishes and any condolences for any losses suffered.

Carroll moved approval of the resolution. Clare seconded the motion. Motion carried 3-0.

Item 9 -- WH 12-65 Resolution to approve an Agreement between the West Haymarket Joint Public Agency and IMG College, LLC for marketing of advertising and sponsorship rights at Pinnacle Bank Arena for a term of September 1, 2013 through June 30, 2021

Jeff Kirkpatrick, City Law Department, stated that this is a letter of agreement with IMG. They continue to work on a full contract and are close to completion, but this allows IMG to get started on their marketing for the coming year. This gives a guaranteed rate of return working with a nationally recognized company who, due to their current relationship with the University, has the knowledge of the community and has already established a relationship with many of the people with whom they will need to work. Carroll asked if the revenue stream fits with the budget as originally projected. Kirkpatrick responded that it does. Although not the maximum we had hoped for, it fits within what we need from this portion of the budget at this time to meet the goals. It also preserves some naming rights and our ability in certain areas to name something outside of this agreement. Clare understands it eliminates future potential conflicts on marketing rights, but questioned from a dollar standpoint if this meets the budget numbers put together. Kirkpatrick explained that it does meet our needs, but more importantly, it gives us a guaranteed return regardless of the economy or the future of what happens within the community of people. If interest drops off for any reason in the future, the risk is assumed by IMG through this contract. We would still be able to operate the arena knowing we have this guaranteed cash flow.

Dave Witte, Vice President/General Manager for Husker IMG Sports Marketing, explained that he has been in the market here six years. However, he has Lincoln ties back to 1912 with his grandparents moving here. Those working on the project all have local connections, which will be important as this moves forward, as well as the relationships with potential marketing partners that already exist. They will be offering multiple possible exposures for the business community. They want to offer a wide range of levels of entry into the arena for the possible sponsors to make sure everyone feels included.

Jane Kinsey asked if anyone was signed up so far or in the wings waiting to sign. Witte has been waiting for approval. There is nothing eminent, but there is lots of interest. They are confident and want to be sure they have the right partners and mix. They would get JPA approval on any partners. Carroll stated it would be premature to name anyone at this time that may require future negotiations. However, the University has national companies who have partnerships through sports programs. Clare further stated the benefit of this contract is that the JPA will not have to assume the risk to sell that marketing as IMG would guarantee a payment. Witte confirmed that his company guarantees the money. Beutler thanked IMG for their work to date and hopes they are satisfied as well. Witte confirmed that they are pleased with the opportunity and it is good for the JPA to relieve the risk.

Clare moved approval of the resolution. Carroll seconded the motion. Motion carried 3-0.

Item 10 -- WH 12-66 Resolution to approve an Agreement between the West Haymarket Joint Public Agency and Dimensional Innovations for the Haymarket Pedestrian Bridge Aesthetic Design

Paula Yancey introduced the resolution to approve the Dimensional Innovations contract for the fabrication and installation of the pedestrian bridge aesthetic elements. As released previously through the media, it will spell out the word "Lincoln." This went through the City Purchasing RFP process. The contract amount is $2,456,350 for all the work including fencing, aesthetic components, and the storyboard development along the inside of the bridge. Carroll asked if Yancey has dealt with this company. Yancey confirmed they had used the company previously and they were always pleased. They do high quality work on time and on budget. Clare asked if you would be able to see the letters on the backside. Yancey said they will be working on what can be seen from what direction. It will spell Lincoln on the top as well and will be lit up so it can be seen from Google maps or from an overhead blimp.

Carroll moved approval of the resolution. Clare seconded the motion. Motion carried 3-0.

Item 11 -- Set Next Meeting Date

The next meeting date is set for Tuesday, December 18, 2012 at 3:00 p.m. in City Council Chambers Room 112

Item 12 -- Motion to Adjourn

Carroll made a motion to adjourn the meeting. Clare seconded the motion. Motion carried 3-0.
The meeting adjourned at 3:42 P.M.

Prepared by: Pam Gadeken, Public Works and Utilities

Pinnacle Bank Arena

WEST HAYMARKET REDEVELOPMENT PROJECTS

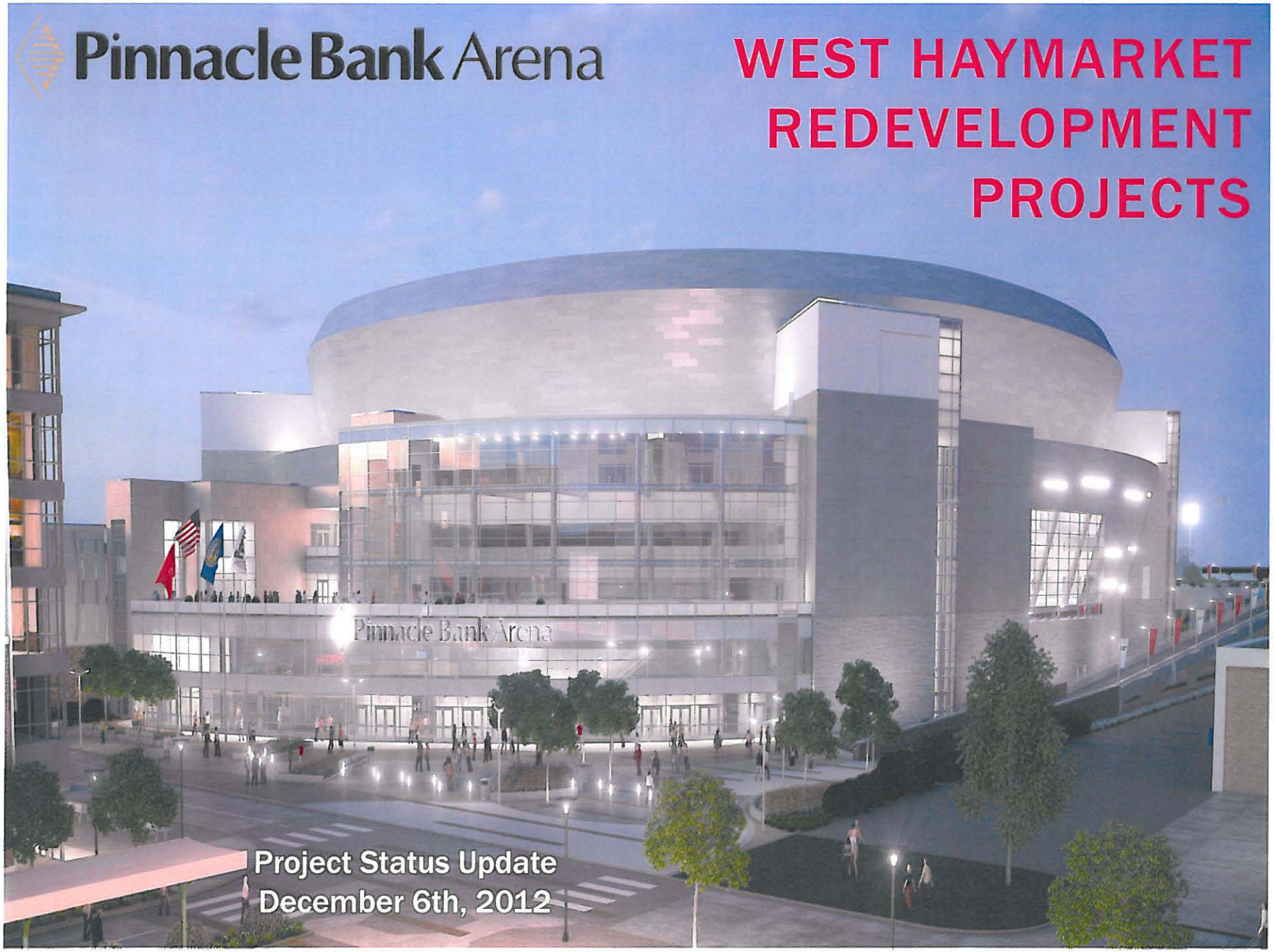

Project Status Update
December 6th, 2012

West Haymarket Local Participation Report
All Workers – Including Engineering and Professional Services
Through October / November 2012

	Total	Percentages
Lincoln/Lancaster County	1199	58%
Nebraska	630	31%
Other	236	11%
	2065	100%

West Haymarket Local Participation Report
Davis Bacon Construction Employees
Through October / November 2012

	Total	Percentages
Lincoln/Lancaster County	1,056	59%
Nebraska	575	32%
Other	153	9%
	1727	100%

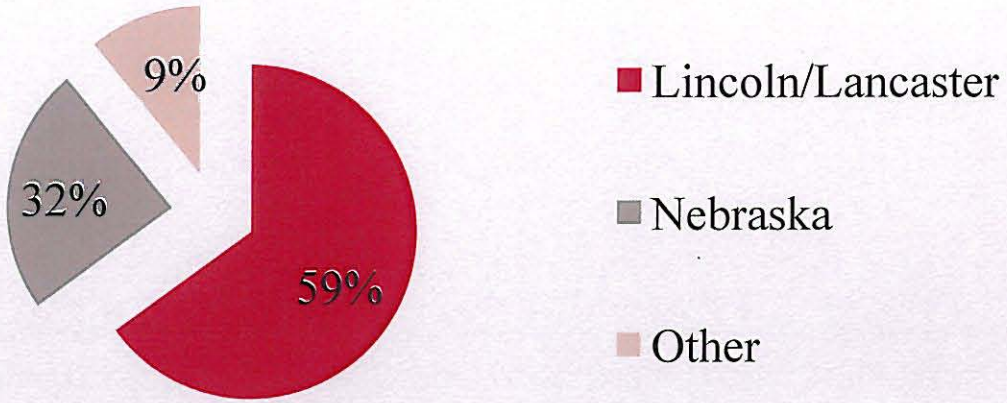

West Haymarket
Company Participation

	Total	Percentage
Nebraska Firms	242	77%
Other	74	23%
	316	100%

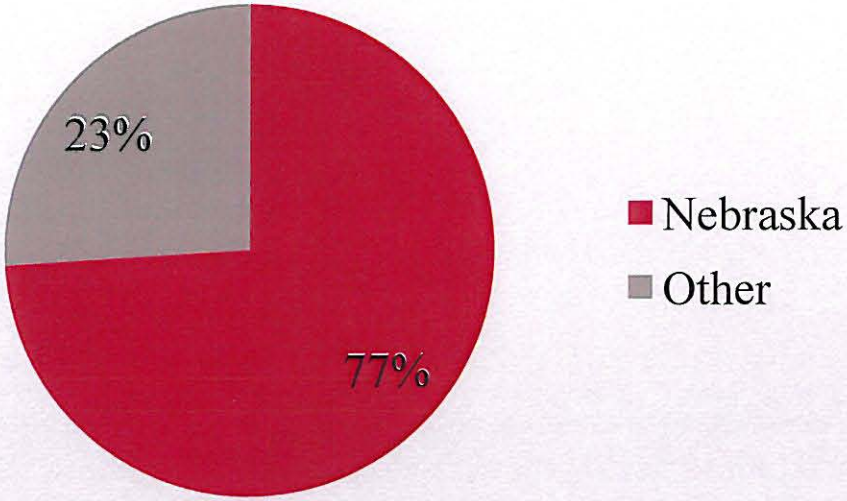

$140 Million
Nebraska Dollars
out of $193 Million

Infrastructure Progress

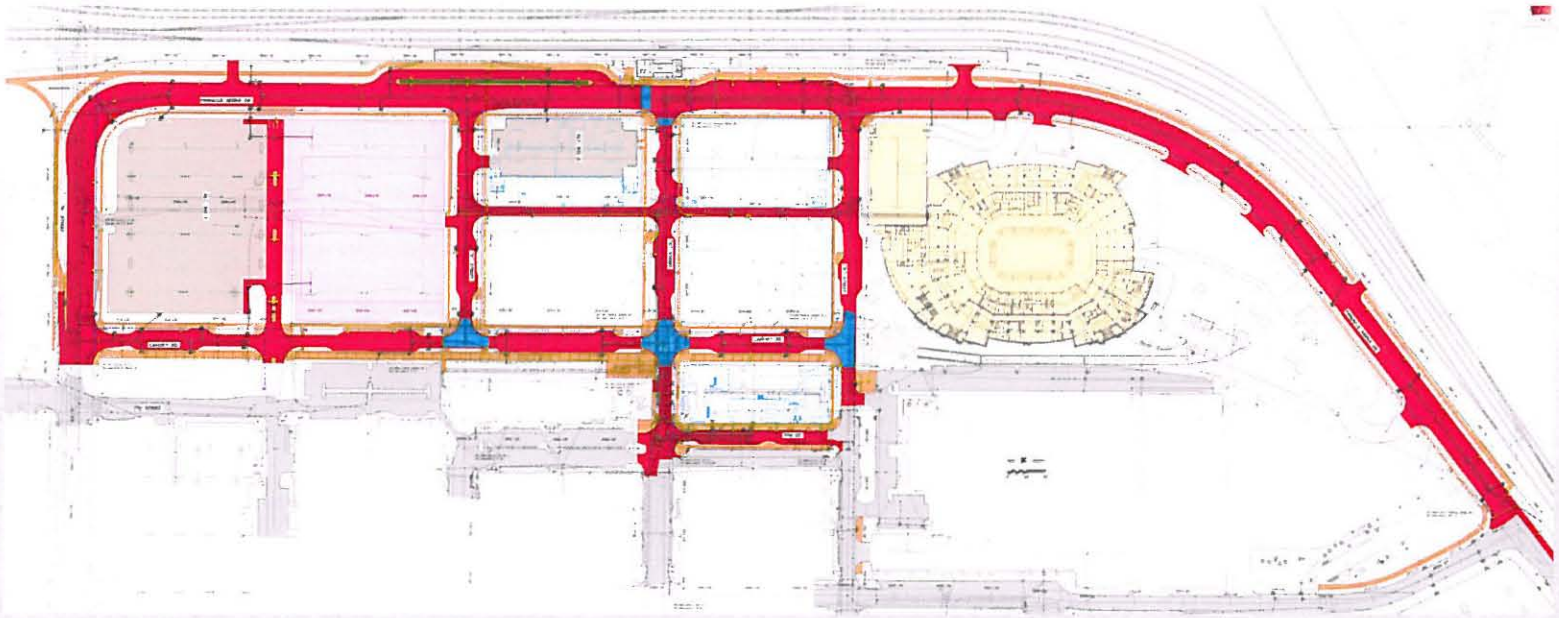

VIEW OF ARENA FROM FUTURE EAST SIDE LANDING PEDESTRIAN BRIDGE

CREW INSTALLING FINAL ELEMENTS OF BRIDGE MSE WALL

COMPLETING BACKFILL AROUND PEDESTRIAN BRIDGE / ARENA PLAZA SHARED PIER

VIEW OF ARENA AND FUTURE LOFTS FROM 7TH & "Q" INTERSECTION

PINNACLE ARENA DRIVE LOOKING NORTH FROM "P" STREET

FIRST PIECES OF PRECAST ON JPA PARKING DECK #1

DEC PIPING IMMEDIATELY ADJACENT TO PARKING GARAGE FOUNDATIONS

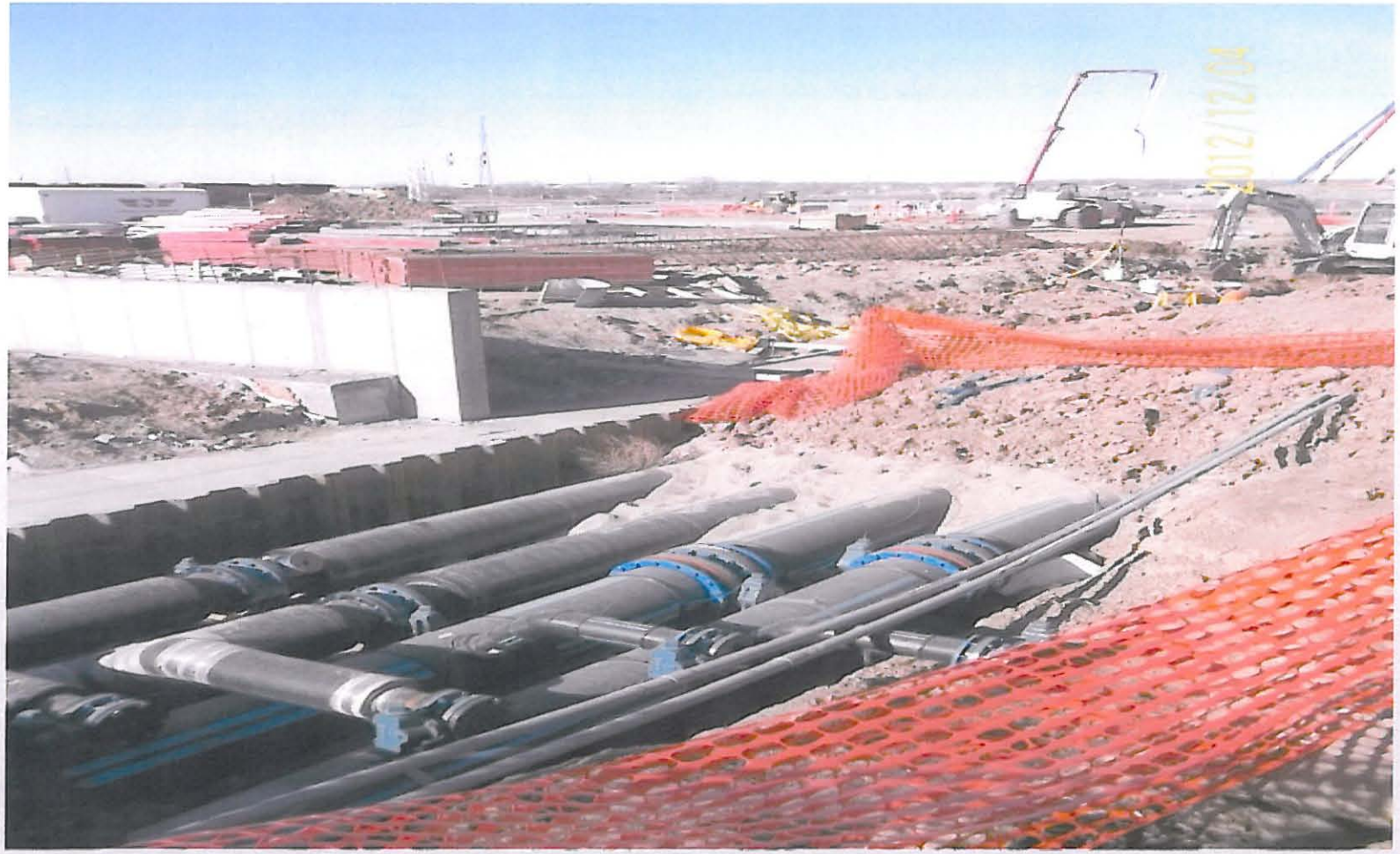

DEC PIPING TRENCH UNDERNEATH FUTURE "Q" STREET

AERIAL 11-15-2012

AERIAL
11-15-2012

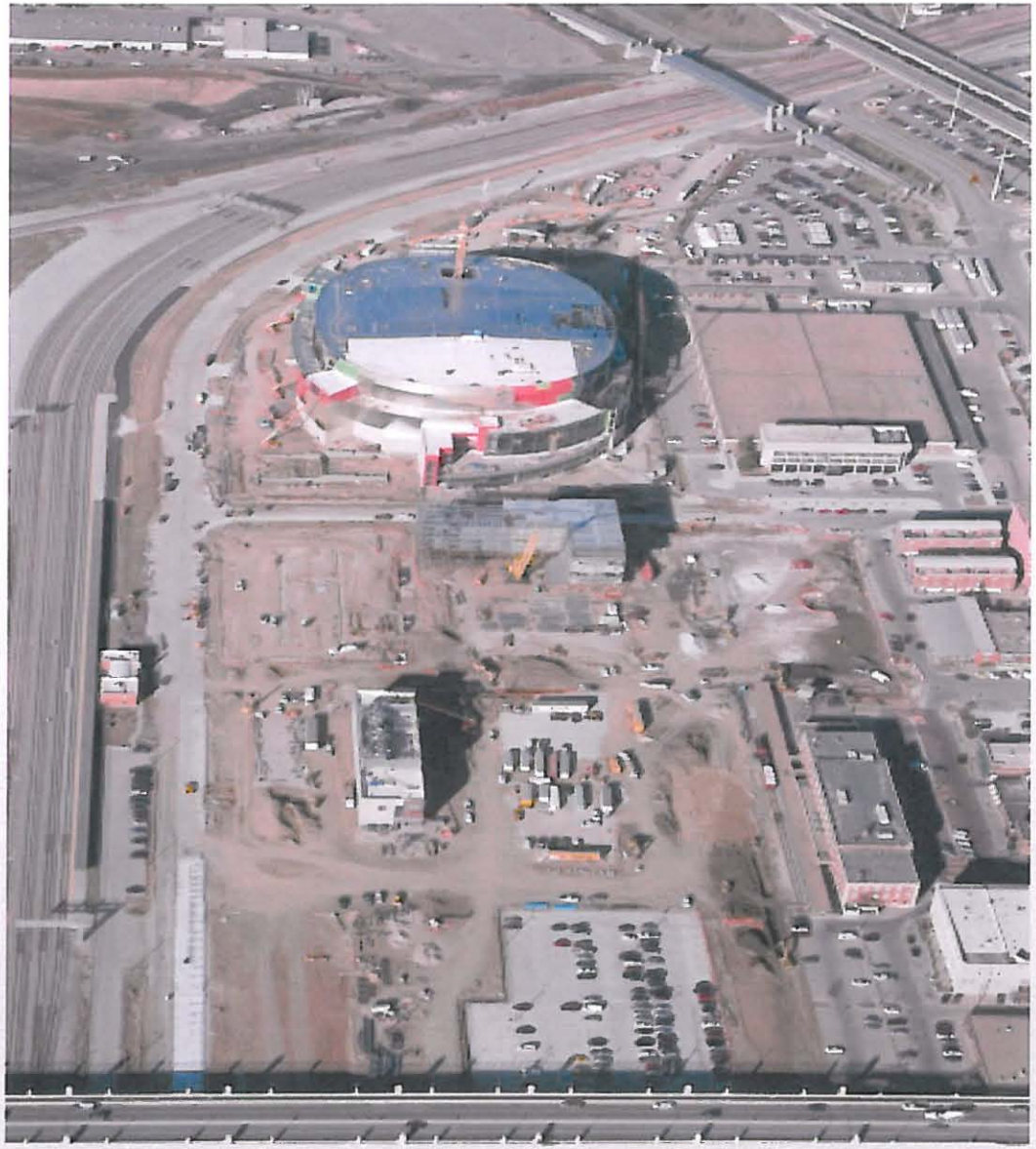

Public invited to sign the final steel beam hoisted into place for the Pinnacle Bank Arena.

- Thursday, Dec. 6 at the Bob Devaney Sports Center prior to and during halftime of the Huskers basketball game with Creighton. The will be in the Hendricks Training Complex lobby beginning at 6 p.m.. A Game ticket is required for entry.
- Friday, Dec. 7, at Iron Horse Park, 7th & Q streets, from 4 to 7 p.m. Stop by during the First Friday Artwalk.

Pinnacle Bank Arena Public Beam Signing

Presentation to the JPA

Pinnacle Bank Arena

December 6, 2012

Mortenson construction | HAMPTON CONSTRUCTION

Safety

- Worked 175 consecutive days without a safety incident
- The Project averages over 300 Craft Workers daily

Mortenson construction | HAMPTON CONSTRUCTION

Concrete Superstructure

- The concrete work continues with Slab on Grade and Slab on Metal Deck
- Garage Foundations have been poured, work continues on Garage walls

Mortenson construction | HAMPTON CONSTRUCTION

Milestones Achieved

- 2nd Phase of Structural Precast is started
- Main Roof Structure Complete
- Metal Deck on Main Roof Complete
- All Phases of Exterior Enclosure Released

Mortenson construction | HAMPTON CONSTRUCTION

Erecting Structural Steel

Mortenson construction | HAMPTON CONSTRUCTION

Detailing Curtainwall at Entry along R Street

Mortenson construction | HAMPTON CONSTRUCTION

Detailing Roof Structural Steel

Mortenson construction | HAMPTON CONSTRUCTION

Metal Panel Installation

Mortenson construction | HAMPTON CONSTRUCTION

Painting Interior Corridors

Mortenson construction | HAMPTON CONSTRUCTION

Bowl ductwork being flown into Place

Mortenson construction | HAMPTON CONSTRUCTION

Installing Exterior Sheathing at a Stair Tower

Mortenson construction | HAMPTON CONSTRUCTION

Early Morning Slab on Metal Deck Pour

Mortenson construction | HAMPTON CONSTRUCTION

Installing Roofing

Mortenson construction | HAMPTON CONSTRUCTION

West Haymarket JPA Meeting

Date 12/6/12

Page

Name (Please Print)	Address	Phone/E-Mail
Jane Kennedy	6703 Hawkins Land	

City of Lincoln, NE
West Haymarket Joint Public Agency
Job Cost Report
As of November 30, 2012

	Total Budget	Expend.	Encumb.	Available Balance	Accounts Receivable	Adjusted Avail Bal
00951 West Haymarket Capital Proj						
70090 West Haymarket Park						
870000 WH General Coordination	6,674,522	5,271,943	1,499,264	96,685-		96,685-
70090 West Haymarket Park	6,674,522	5,271,943	1,499,264	96,685-		96,685-
70091 Arena						
870100 WH Arena	178,107,742	90,291,940	82,482,978	5,332,824		5,332,824
870101 WH Arena Contingency	5,143,925			5,143,925		5,143,925
870203 WH Arena Parking Garage	698,599	588,187	137,607	27,195-		27,195-
70091 Arena	183,950,266	90,880,127	82,620,585	10,449,554		10,449,554
70092 Parking						
870201 WH HymktPkLot,FestSp&PedGrdStr	13,080,079	2,760,631	1,360,719	8,958,729		8,958,729
870202 WH Parking Garage #1	15,066,244	2,027,052	12,052,580	986,612		986,612
870204 WH Parking Garage #2	232,000	203,219	3,817	24,964		24,964
70092 Parking	28,378,323	4,990,902	13,417,116	9,970,305		9,970,305
70093 Roads						
870301 WH Charleston Bridge/Roadway	264,403	252,015	31,969	19,581-		19,581-
870302 WH "M"&"N" St,7th to 10th St	2,818,574	3,431,767	61,480	674,673-		674,673-
870303 WH USPS Parking Lot Reconstctn	713,947	696,054	2,124	15,769		15,769
870304 WH 10th & Salt Creek Road Impr	3,420,647	3,436,721	7,927	24,001-		24,001-
870305 WH Core Area Roadway & Utility	13,531,642	9,398,228	6,012,101	1,878,687-		1,878,687-
870306 WH Traffic Analysis	125,095	71,273	17,520	36,302		36,302
870307 WH Streetscape	405,706	328,871	58,817	18,018		18,018
870308 WH Sun Valley Blvd & West "O"	40,000	23,682	5,689	10,629		10,629
70093 Roads	21,320,014	17,638,611	6,197,627	2,516,224-		2,516,224-

City of Lincoln, NE
West Haymarket Joint Public Agency
Job Cost Report
As of November 30, 2012

	Total Budget	Expend.	Encumb.	Available Balance	Accounts Receivable	Adjusted Avail Bal
00951 West Haymarket Capital Proj						
70094 Pedestrian Ways						
870401 WH Plaza						
870402 WH Canopy Phase II	1,000,000	296,292	983,460	279,752-		279,752-
70094 Pedestrian Ways	1,000,000	296,292	983,460	279,752-		279,752-
70095 Utilities						
870501 WH Sanitary Sewer Relocation	1,492,905	1,492,905				
870502 WH Fiber Optic Comm & Other	650,880	506,035	31,547	113,298		113,298
70095 Utilities	2,143,785	1,998,940	31,547	113,298		113,298
70096 Environmental						
870601 WH NDEQ T-200	2,276,402	1,591,624	12,778	672,000	80,945	752,945
870602 WH Voluntary Clean-up Program	1,725,156	802,682		922,474		922,474
870603 WH Environmental Contngy Pln	2,124,947	1,250,937		874,010		874,010
870604 WH Other/Miscellaneous	525,600	584,757	342,786	401,943-		401,943-
870605 WH Canopy Phase I-Lead Abatemt	80,000			80,000		80,000
70096 Environmental	6,732,105	4,230,000	355,564	2,146,541	80,945	2,227,486
70097 Dirt Moving						
870701 WH Stmwtr Mtgtn-Sth&WstOf BNSF	2,305,770			2,305,770		2,305,770
870703 WH Initial Haymarket Site Prep	6,730,240	6,087,617	39,538	603,085		603,085
870704 WH Other Stormwater Mitigation						
70097 Dirt Moving	9,036,010	6,087,617	39,538	2,908,855		2,908,855
70098 TIF Improvements						
870800 WH TIF Improvements						
70098 TIF Improvements						

As of November 30, 2012

	Total Budget	Expend.	Encumb.	Available Balance	Accounts Receivable	Adjusted Avail Bal
70099 Site Purchase						
870901 WH BNSF Land Acquisition	1,051,078	1,060,419		9,341-		9,341-
870902 WH Alter Site Purchase	4,860,881	4,544,172		316,709		316,709
870903 WH Jaylynn Site Purchase	1,796,652	1,700,097		96,555		96,555
870904 WH UP Site Purchase	1,326,248	1,326,248				
870905 WH BNSF Const, Rehab, Reloc	47,961,214	50,224,377		2,263,163-		2,263,163-
870906 WH Amtrak Station	2,338,345	2,360,525	601	22,781-		22,781-
870907 WH UP Track Mod West of Bridge	1,236,000	1,225,232		10,768		10,768
870908 WH Other Private Prop Acqstns	1,880,587	2,213,515	20,397	353,325-		353,325-
70099 Site Purchase	62,451,005	64,654,585	20,998	2,224,578-		2,224,578-
70100 Other Costs						
870951 WH ITS & Dynamic Message Signs	1,826,827	160,688	184,457	1,481,682		1,481,682
870952 WH Community Space & Civic Art	1,500,000	52,094	14,691	1,433,215		1,433,215
70100 Other Costs	3,326,827	212,782	199,148	2,914,897		2,914,897
70105 Bond Related Costs						
870975 WH Miscellaneous	5,160,000			5,160,000		5,160,000
870976 WH Line of Credit		53,227		53,227-		53,227-
870977 WH Series 1 JPA Debt		1,535,168		1,535,168-		1,535,168-
870978 WH Series 2 JPA Debt		1,221,802		1,221,802-		1,221,802-
870979 WH Series 3 JPA Debt		577,661		577,661-		577,661-
870980 WH Series 4 JPA Debt		1,243,825		1,243,825-		1,243,825-
70105 Bond Related Costs	5,160,000	4,631,683		528,317		528,317
00951 West Haymarket Capital Proj	330,172,857	200,893,482	105,364,847	23,914,528	80,945	23,995,473

City of Lincoln, NE
West Haymarket Joint Public Agency
Operating Expenditure Report
As of November 30, 2012

00950 West Haymarket Reven
06095 W Haymarket O & M

	ORIGINAL BUDGET	REAPPROP & P/Y ENC	BUDGET REVISIONS	TOTAL	YTD EXPEND	AVAILABLE BALANCE
00950 West Haymarket Revenue						
06095 W Haymarket O & M						
11 Materials & Supplies						
5221 Office Supplies	250			250	92	158
5261 Postage	2,000			2,000	170	1,830
5323 Bldg Maint Supplies	560			560	89	471
11 Materials & Supplies	2,810			2,810	351	2,459
12 Other Services & Charges						
5621 Misc Contractual Services	454,945			454,945	4,830	450,115
5624 Auditing Service	15,500			15,500	12,000	3,500
5631 Data Processing Service	6,992			6,992	166	6,826
5633 Software	1,100			1,100		1,100
5643 Management Services	53,000			53,000	4,000	49,000
5683.05 Fire Alarm Monitor	500			500	103	397
5762 Photocopying	500			500	135	365
5763 Printing	500			500	121	379
5794 Public Officials	27,000			27,000		27,000
5821 Electricity - Bldg & Grnds	4,000			4,000	1,770	2,230
5825 Natural Gas					41	41-
5829 Telephone	1,200			1,200	282	918
5830 Water	6,000			6,000	55	5,945
5870 Other Bldg Maintenance	4,000			4,000	1,001	2,999
5928 Rent of Co/City Bldg Space	2,456			2,456	614	1,842
5931 Parking Rent Bldg Comm	627			627	157	470
5952 Advertising/Media Serv	2,850			2,850	225	2,625
12 Other Services & Charges	581,170			581,170	25,500	555,670
06095 W Haymarket O & M	583,980			583,980	25,851	558,129

City of Lincoln, NE
West Haymarket Joint Public Agency
Operating Expenditure Report
As of November 30, 2012

00950 West Haymarket Reven
195011 JPA 2010A Debt Servi

	ORIGINAL BUDGET	REAPPROP & P/Y ENC	BUDGET REVISIONS	TOTAL	YTD EXPEND	AVAILABLE BALANCE
195011 JPA 2010A Debt Servic						
15 Debt Service						
6233 Bd Trustee Pmt-Serv Chg	4,651,510			4,651,510	524	4,650,986
6235 Bd Trustee Pmt-Interest	524			524	2,325,755	2,325,231-
15 Debt Service	4,652,034			4,652,034	2,326,279	2,325,755
195011 JPA 2010A Debt Servic	4,652,034			4,652,034	2,326,279	2,325,755

City of Lincoln, NE
West Haymarket Joint Public Agency
Operating Expenditure Report
As of November 30, 2012

00950 West Haymarket Reven
195021 JPA 2010B/C Debt Ser

	ORIGINAL BUDGET	REAPPROP & P/Y ENC	BUDGET REVISIONS	TOTAL	YTD EXPEND	AVAILABLE BALANCE
195021 JPA 2010B/C Debt Serv						
15 Debt Service						
6233 Bd Trustee Pmt-Serv Chg	5,874,322			5,874,322		5,874,322
6235 Bd Trustee Pmt-Interest	1,048			1,048	2,937,161	2,936,113-
15 Debt Service	5,875,370			5,875,370	2,937,161	2,938,209
195021 JPA 2010B/C Debt Serv	5,875,370			5,875,370	2,937,161	2,938,209

00950 West Haymarket Reven
195031 JPA 2011 Debt Servic

	ORIGINAL BUDGET	REAPPROP & P/Y ENC	BUDGET REVISIONS	TOTAL	YTD EXPEND	AVAILABLE BALANCE
195031 JPA 2011 Debt Service						
15 Debt Service						
6233 Bd Trustee Pmt-Serv Chg	4,591,688			4,591,688		4,591,688
6235 Bd Trustee Pmt-Interest	424			424	2,295,844	2,295,420-
15 Debt Service	4,592,112			4,592,112	2,295,844	2,296,268
195031 JPA 2011 Debt Service	4,592,112			4,592,112	2,295,844	2,296,268
00950 West Haymarket Revenue	15,703,496			15,703,496	7,585,135	8,118,361

West Haymarket Joint Public Agency
Payment Register
11/1/2012 through 11/30/2012

Vendor Number	Name	Remark	Project	Description	Do Ty	Doc Number	Amount	Payment Date	Payment Number
38391	Lincoln Journal Star	Cust 60016059, Bid #12 265	870100	WH Arena	PV	1404255	16.39	11/01/12	57265
38391	Lincoln Journal Star	Cust#60016059, Bid #12 257	870100	WH Arena	PV	1404256	17.52	11/01/12	57265
53356	Lincoln Electric System	9th & T St breaker pedestal	870304	WH 10th & Salt Creek Road Impr	PV	1405112	891.76	11/01/12	57273
90261	Stephens & Smith Construction Co Inc	111JPAA001,Platform to 9/30	870906	WH Amtrak Station	OV	1405198	220.00	11/01/12	57292
90261	Stephens & Smith Construction Co Inc	412JPAA001 Platform final	870906	WH Amtrak Station	OV	1405200	30,536.95	11/01/12	57292
249308	DLR Group Inc	Sept,2012 Fixed Reimb Exps	870100	WH Arena	OV	1404257	10,000.00	11/01/12	57314
320143	Hawkins Construction	#870305 Infrstrc,9/30-10/13	870305	WH Core Area Roadway & Utility	OV	1405191	1,861,182.54	11/01/12	57317
594458	Ronco Construction Company Inc	#1924,Amtrak Statn to 9/30	870906	WH Amtrak Station	OV	1405196	36,595.80	11/01/12	57330
596608	M A Mortenson Company	Aug,2012 scheduling servs	870000	WH General Coordination	OV	1405411	16,666.00	11/01/12	57332
596608	M A Mortenson Company	Sept,2012 scheduling servs	870000	WH General Coordination	OV	1405412	8,333.00	11/01/12	57332
76881	Windstream	Billing Number 402-477-6387	06095	W Haymarket O & M	PV	1406223	93.60	11/07/12	482380
108417	Citizen Information Center	WHJPA Video 8/3,8/17,9/6/2012	06095	W Haymarket O & M	PV	1406226	135.00	11/07/12	482381
131481	Public Works Business Office	City Staff-Pam Gadeken	06095	W Haymarket O & M	PV	1406227	829.84	11/07/12	482382
103499	Register of Deeds	Corrected Quitclaim Deed-BNSF	870901	WH BNSF Land Acquisition	PV	1408296	139.50	11/08/12	24000
35633	Constructors Inc	Water main work to 10/26/12	870302	WH "M"&"N" St,7th to 10th St	OV	1406374	62,482.97	11/08/12	57364
35633	Constructors Inc	N St.Rdwy work to 10/25/12	870302	WH "M"&"N" St,7th to 10th St	OV	1406376	659,271.61	11/08/12	57364
53356	Lincoln Electric System	510 N St	06095	W Haymarket O & M	PV	1406217	824.52	11/08/12	57382
53356	Lincoln Electric System	510 N St 10/2/12-10/30/12	06095	W Haymarket O & M	PV	1406874	302.89	11/08/12	57382
585350	Hausmann Construction	InfrastrucImpr,9/30-10/13	870201	WH HymktPkLot,FestSp&PedGrdStr	OV	1404281	496,018.72	11/08/12	57477
596579	SMG	Expenses for IAVM Conf	870100	WH Arena	PV	1406239	5,000.00	11/08/12	57493
596877	Olsson Associates	Design servs, 9/9-10/6/12	870952	WH Community Space & Civic Art	OV	1405442	457.50	11/08/12	57495
596877	Olsson Associates	Design servs,9/9-10/6/12	870000	WH General Coordination	OV	1405442	42,073.98	11/08/12	57495
596877	Olsson Associates	Design servs, 9/9-10/6/12	870951	WH ITS & Dynamic Message Signs	OV	1405442	5,392.25	11/08/12	57495
596877	Olsson Associates	Design servs 9/9-10/6/12	870703	WH Initial Haymarket Site Prep	OV	1405442	3,299.55	11/08/12	57495
596877	Olsson Associates	Design servs, 9/9-10/6/12	870302	WH "M"&"N" St,7th to 10th St	OV	1405442	20,997.01	11/08/12	57495
596877	Olsson Associates	Design servs, 9/9-10/6/12	870202	WH Parking Garage #1	OV	1405442	16,949.50	11/08/12	57495
596877	Olsson Associates	Design servs, 9/9-10/6/12	870307	WH Streetscape	OV	1405442	21,655.05	11/08/12	57495
596877	Olsson Associates	Design servs, 9/9-10/6/12	870305	WH Core Area Roadway & Utility	OV	1405442	109,043.38	11/08/12	57495
596877	Olsson Associates	Design servs 9/9-10/6/12	870906	WH Amtrak Station	OV	1405442	10,376.75	11/08/12	57495
596877	Olsson Associates	Design servs 9/9-10/6/12	870201	WH HymktPkLot,FestSp&PedGrdStr	OV	1405442	148,658.48	11/08/12	57495
598263	PC Sports LLC	October,2012 Arena Mgmt.	870100	WH Arena	OV	1406369	30,450.00	11/08/12	57505
598263	PC Sports LLC	October, 2012 Program Mgmt	870000	WH General Coordination	OV	1406369	68,050.00	11/08/12	57505
98415	Lincoln Water System	510 N St	06095	W Haymarket O & M	PV	1407739	55.36	11/14/12	482696
102154	Public Building Commission	Finance- Mark L 11/12	06095	W Haymarket O & M	PV	1407740	52.24	11/14/12	482697
102154	Public Building Commission	Finance- Mark L 11/12	06095	W Haymarket O & M	PV	1407740	204.62	11/14/12	482697
36863	General Excavating	Proj 870951	870951	WH ITS & Dynamic Message Signs	OV	1407488	29,701.41	11/15/12	57542
320143	Hawkins Construction	Proj 870305	870305	WH Core Area Roadway & Utility	OV	1407487	687,029.45	11/15/12	57610
406174	BKD LLP	West Haymarket JPA 2012 #1	06095	W Haymarket O & M	PV	1407741	3,500.00	11/15/12	57626
593485	Thought District Inc	10-JPA-0007 On-Going Mgmt	06095	W Haymarket O & M	PV	1407742	2,000.00	11/15/12	57654
98415	Lincoln Water System	541 N St, 8/23-10/24/12	870902	WH Alter Site Purchase	PV	1409775	25.86	11/21/12	483305
98415	Lincoln Water System	601 N St, 8/23-10/24/12	870902	WH Alter Site Purchase	PV	1409778	9.84	11/21/12	483305
594773	Alfred Benesch & Company	Inspections,9/10-10/7/12	870100	WH Arena	OV	1408667	5,828.45	11/21/12	483306
38391	Lincoln Journal Star	Cust#60016059	870201	WH HymktPkLot,FestSp&PedGrdStr	PV	1408660	17.52	11/22/12	57708
53356	Lincoln Electric System	601 N St, 10/3-10/30/12	870305	WH Core Area Roadway & Utility	PV	1408658	80.45	11/22/12	57723
53356	Lincoln Electric System	601 N St,2, 10/3-10/30/12	870305	WH Core Area Roadway & Utility	PV	1408659	91.61	11/22/12	57723
196867	Terracon Consultants Inc	Test & Inspect to 9/29/12	870100	WH Arena	OV	1408674	125,693.05	11/22/12	57796
320143	Hawkins Construction	Canopy work to 10/31/12	870402	WH Canopy Phase II	OV	1408671	111,069.25	11/22/12	57806
585350	Hausmann Construction	Infrastruc Impr to 10/27/12	870201	WH HymktPkLot,FestSp&PedGrdStr	OV	1408673	427,893.31	11/22/12	57829
596608	M A Mortenson Company	Arena work, Oct,2012	870100	WH Arena	OV	1408663	9,194,047.00	11/22/12	57849
602078	Hausmann-Dunn, a Joint Venture	Deck 1 work to 10/31/12	870202	WH Parking Garage #1	OV	1409743	727,911.00	11/22/12	57861
77921	County/City Property Management	October, 2012 Amtrak Station	06095	W Haymarket O & M	PV	1411706	476.70	11/28/12	483515
77921	County/City Property Management	CITY CONTROLLER-JPA	06095	W Haymarket O & M	PV	1411708	53.56	11/28/12	483515
97885	Copy Services	Customer 595381	06095	W Haymarket O & M	PV	1411711	10.87	11/28/12	483516

Vendor Number	Name	Remark	Project	Description	Do Ty	Doc Number	Amount	Payment Date	Payment Number
108417	Citizen Information Center	WHJPA Video 10/5/12,11/2/12	06095	W Haymarket O & M	PV	1411721	90.00	11/28/12	483517
324566	Union Bank & Trust Company	West Haymrkt Bds, Series 2010A	195011	JPA 2010A Debt Service	PV	1411142	2,325,755.00	11/28/12	483518
324566	Union Bank & Trust Company	West Haymrkt Bds, Series 2010B	195021	JPA 2010B/C Debt Service	PV	1411144	1,855,980.00	11/28/12	483518
324566	Union Bank & Trust Company	West Haymrkt Bds, Series 2010C	195021	JPA 2010B/C Debt Service	PV	1411147	1,081,181.25	11/28/12	483518
324566	Union Bank & Trust Company	West Haymrkt Bds, Series 2011	195031	JPA 2011 Debt Service	PV	1411149	2,295,843.75	11/28/12	483518
602127	Cal Vegas LTD dba Motel 6 Lincoln	Refund Occupation Tax Overpmt	06094	W Haymarket Revenue	PV	1411726	211.56	11/28/12	483519
98079	Black Hills Energy	Acct 2707763167 510 N St	06095	W Haymarket O & M	PV	1411716	40.80	11/29/12	57914
320143	Hawkins Construction	Core Roadway work to 11/10	870305	WH Core Area Roadway & Utility	OV	1411775	654,278.53	11/29/12	57929
596608	M A Mortenson Company	Oct,2012 scheduling servs	870000	WH General Coordination	OV	1411099	8,333.00	11/29/12	57941
599315	Legends Sales & Marketing LLC	Oct,2012 Retainer+rent+sal	870100	WH Arena	OV	1411092	20,104.25	11/29/12	57944
Grand total							23,224,531.75		

West Haymarket Joint Public Agency
Public Works Engineering Costs
11/1/2012 through 11/30/2012

Description	Fund	Project	Description	Do Ty	Document Number	Object	Sub	Amount	G/L Date
Design Engineering	00951	870000	WH General Coordination	EU	354317	6153	130	3,455.65	11/15/12
Construction Engineering	00951	870201	WH HymktPkLot,FestSp&PedGrdStr	EU	354317	6153	320	30.43	11/15/12
Design Engineering	00951	870201	WH HymktPkLot,FestSp&PedGrdStr	EU	354317	6153	130	1,761.44	11/15/12
Design Engineering	00951	870000	WH General Coordination	EU	354609	6153	130	797.05	11/29/12
Design Engineering	00951	870201	WH HymktPkLot,FestSp&PedGrdStr	EU	354609	6153	130	2,866.68	11/29/12
Design Engineering	00951	870302	WH "M"&"N" St,7th to 10th St	EU	354609	6153	130	170.80	11/29/12
Design Engineering	00951	870305	WH Core Area Roadway & Utility	EU	354609	6153	130	455.45	11/29/12
Grand total								9,537.50	

WH 12-67 Introduce: 12-18-12

RESOLUTION NO. WH- _____

BE IT RESOLVED by the Board of Representatives of the West Haymarket Joint Public Agency:

That the Third Amendment to Master Development Agreement between the West Haymarket Joint Public Agency and BNSF Railway Company to provide for a refund of the JPA's advance payment in excess of BNSF's actual cost for (1) grading and flagging; and (2) compressing the timeline; which results in refund amounts of $499,162 and $2,053,516, respectively, is hereby approved and the Chairperson of the West Haymarket Joint Public Agency Board of Representatives is hereby authorized to execute said Third Amendment to Master Development Agreement on behalf of the West Haymarket Joint Public Agency.

The City Clerk is directed to return one fully executed original of the Third Amendment and a copy of this Resolution to Rick Peo, Chief Assistant City Attorney, for transmittal and execution to BNSF Railway Company.

Adopted this _____ day of _____, 2012.

Introduced by:

_____

Approved as to Form & Legality:

West Haymarket Joint Public Agency
Board of Representatives

_____
Legal Counsel for
West Haymarket Joint Public Agency

_____
Chris Beutler, Chair

_____
Tim Clare

_____
Eugene Carroll

THIRD AMENDMENT TO MASTER DEVELOPMENT AGREEMENT

THIS THIRD AMENDMENT TO MASTER DEVELOPMENT AGREEMENT ("**Third Amendment**") is dated to be effective the _____ day of _____, 2012 (the "**Effective Date**"), by and between **BNSF RAILWAY COMPANY**, a Delaware corporation ("**BNSF**"), and the **WEST HAYMARKET JOINT PUBLIC AGENCY**, a political subdivision of the State of Nebraska created by the Nebraska Joint Public Agency Act, Neb. Rev. Stat. § 13-2501 *et seq.* ("**JPA**").

RECITALS

A. In an effort to strengthen the long-term economic and physical viability of the West Haymarket District and Downtown Lincoln, and in support of the plans of the City (defined below) and JPA to construct entertainment, recreation, lodging, offices, retail and/or other complementary and/or supporting facilities (collectively, the "**West Haymarket Project**"), BNSF and the City of Lincoln, Nebraska, a Nebraska municipal corporation ("**City**") entered into, among other agreements, that certain Master Development Agreement dated October 18, 2010 (as amended by that certain First Omnibus Amendment to Master Development Agreement and Construction Agreement dated December 29, 2010 [the "**First Amendment**"] and that certain Second Amendment to Master Development Agreement dated January 28, 2011 [the "**Second Amendment**"], the "**Master Agreement**"). With BNSF's consent, the City subsequently assigned, and the JPA assumed, all of the City's right, title and interest in and to the Master Agreement.

B. Also in connection with the West Haymarket Project, BNSF, City, and U.S. Bank National Association ("**Escrow Agent**") entered into that certain Escrow Agreement dated October 19, 2010 (as amended from time to time, the "**Escrow Agreement**"). With the consent of BNSF and the Escrow Agent, City subsequently assigned, and the JPA assumed, all of the City's right, title and interest in and to the Escrow Agreement.

C. BNSF, JPA and Escrow Agent subsequently entered into that certain First Amendment to Escrow Agreement dated December 29, 2010 ("**First Amendment**") whereby the parties amended the Escrow Agreement to, among other things, provide for the deposit of additional funds by the JPA in the amount of $2,805,770 as an estimate of certain BNSF Additional City Cost Work costs related to grading and flagging ("**City Additional $ Deposit - Supplement No. 1**").

D. BNSF, JPA and Escrow Agent also entered into that certain Second Amendment to Escrow Agreement dated June 15, 2011 ("**Second Amendment**") whereby the parties amended the Escrow Agreement to, among other things, provide for the deposit of additional funds by the JPA in the amount of $3,379,913 as an estimate of certain BNSF Additional City Cost Work costs for compressing the timeline for completion of the BNSF Work to meet the mutually agreed upon September 2012 completion deadline for the BNSF Work ("**City Additional $ Deposit - Supplement No. 2**"). The City Additional $ Deposit - Supplements No. 1 and 2 are collectively referred to as the "**Additional Deposits**". The Second Amendment also contemplated that, if the total actual costs incurred by BNSF for the BNSF Additional City Cost Work covered by the Additional Deposits was less than the total of the Additional Deposits, BNSF would redeposit such excess funds into the escrow account for disbursement to the JPA by the Escrow Agent.

E. All funds held by Escrow Agent under the Escrow Agreement, including the entirety of the Additional Deposits, were ultimately disbursed to BNSF, and the Escrow Agreement was terminated. As the Escrow Agreement is no longer in place, BNSF is not able to redeposit any excess funds from the Additional Deposits back into escrow for disbursement to the JPA as was originally provided for under the terms of the Escrow Agreement. Accordingly, BNSF and JPA desire to amend the Master Agreement to, among other things, provide for BNSF's reimbursement of such unexpended Additional Deposits' funds to JPA, in accordance with the terms and conditions set forth below.

AGREEMENTS

NOW, THEREFORE, in consideration of the covenants contained herein, and for other good and valuable consideration, the receipt and sufficiency of which are hereby acknowledged, the parties agree as follows:

Article I. **City Additional $ Deposit - Supplement No. 1.** In connection with the BNSF Additional City Cost Work costs related to grading and flagging that were to be covered by the City Additional $ Deposit - Supplement No. 1, BNSF has incurred actual BNSF Additional City Cost Work in the amount of $2,306,608 (the "**Actual BNSF Additional City Cost Work (Grading/Flagging)**"). Within 30 days after the full execution of this Third Amendment, BNSF agrees to pay to JPA the amount of **$499,162** (the "**Supplement No. 1 Refund**"), calculated as: (a) the City Additional $ Deposit - Supplement No.1 amount of $2,805,770 less (b) the Actual BNSF Additional City Cost Work (Grading/Flagging) amount of $2,306,608.

Article II. **City Additional $ Deposit - Supplement No. 2.** In connection with the BNSF Additional City Cost Work costs related to compressing the timeline that were to be covered by the City Additional $ Deposit - Supplement No. 2, BNSF has incurred actual BNSF Additional City Cost Work in the amount of $1,326,397 (the "**Actual BNSF Additional City Cost Work (Timeline Compression)**"). Within 30 days after the full execution of this Third Amendment, BNSF agrees to pay to JPA the amount of **$2,053,516** (the "**Supplement No. 2 Refund**"), calculated as: (a) the City Additional $ Deposit - Supplement No.2 amount of $3,379,913 less (b) the Actual BNSF Additional City Cost Work (Timeline Compression) amount of $1,326,397.

Article III. **Waiver and Release; Audit Right.** Upon the JPA's receipt of the Supplement No. 1 Refund and the Supplement No. 2 Refund, subject to the JPA's audit right for the BNSF Additional City Cost Work set forth in Section 35 of the Master Agreement, the JPA, for itself, its successors and assigns, agrees to waive and release any and all claims for any further reimbursement of any Additional Deposit funds.

Article IV. **BNSF Additional City Cost Work.** The parties acknowledge and agree that, while construction is continuing on the West Haymarket Project by the JPA, BNSF may incur additional costs (including but not limited to flagging, grading and other expenses) in order to accommodate the West Haymarket Project construction completion. Such additional costs shall be considered to be BNSF Additional City Cost Work, payable to BNSF's contractor or reimbursable to BNSF (at BNSF's election) by the JPA within thirty (30) days after the JPA's receipt of an invoice and other documentation reasonably supporting such BNSF Additional City Cost Work.

Article V. **Inspection and Audit.** Any books, papers, receipts, and accounts of BNSF relating to the BNSF Additional City Cost Work covered by the City Additional Dollar Deposit Supplement No. 1 and City Additional Dollar Deposit Supplement No. 2 will at all reasonable times and upon reasonable prior written notice be open to inspection and audit by the agents and authorized representatives of the JPA, as well as the State of Nebraska, for a period of one (1) year after the date of this Third Amendment. In addition, the JPA shall have the same right to inspection and audit of any books, papers, receipts, and accounts of BNSF hereto relating to the BNSF Additional City Cost Work described in Article IV above for a period of one (1) year after the date the JPA receives an invoice and other documentation reasonably supporting such BNSF Additional City Cost Work.

Article VI. **No Waiver.** JPA expressly acknowledges and agrees that BNSF's agreement to enter into this Third Amendment shall not be deemed to waive any of BNSF's rights under the Master Agreement and/or any or all other agreements entered into by the Parties in connection with the West Haymarket Project (collectively, the "**West Haymarket Project Agreements**"). BNSF expressly reserves all of its rights under the Master Agreement and all other West Haymarket Project Agreements, and BNSF's execution of this Third Amendment is not to be construed as a waiver of any such rights.

Article VII. **Ratification.** Except as expressly modified by this Third Amendment, all of the terms and provisions of the Master Agreement are hereby reaffirmed and remain in full force and effect. As of the Effective Date, this Third Amendment shall constitute a part of the Master Agreement. All capitalized terms in this Third Amendment shall have the same meaning as given in the Master Agreement unless otherwise

specifically defined herein. In the event there is a conflict between the terms and provisions of the Master Agreement, the First Amendment, the Second Amendment and the terms and provisions of this Third Amendment, the terms and provisions of this Third Amendment shall control.

Article VIII. **Miscellaneous.** This Third Amendment (i) shall be binding upon and inure to the benefit of BNSF and JPA and their respective legal representatives, successors and assigns; (ii) may be modified or amended only by a writing signed by each party hereto; and (iii) may be executed in multiple counterparts, each of which shall, for all purposes, be deemed an original but which together shall constitute one and the same instrument, and the signature pages from any counterpart may be appended to any other counterpart to assemble fully executed documents.

IN WITNESS WHEREOF, BNSF and JPA have executed this Third Amendment to the Master Agreement as of the date below each party's signature; to be effective, however, as of the Effective Date.

BNSF:

BNSF Railway Company, a Delaware corporation

By: _____

Name: _____

Title: _____

Date: _____

JPA:

West Haymarket Joint Public Agency, a Nebraska joint public agency

By: _____

Name: _____

Title: _____

Date: _____

WH 12-68 Introduce: 12-18-12

RESOLUTION NO. WH- _____

BE IT RESOLVED by the Board of Representatives of the West Haymarket Joint Public Agency:

That the Contract Agreement between the West Haymarket Joint Public Agency and Hawkins Construction Company, pursuant to Bid No. 12-291, for construction of the West Haymarket Parking Lot, Festival Space and Pedestrian Bridge for the sum of $7,270,489.12 is hereby approved and the Chairperson of the West Haymarket Joint Public Agency Board of Representatives is hereby authorized to execute said Contract Agreement on behalf of the West Haymarket Joint Public Agency.

The City Clerk is directed to return one fully executed original Contract Agreement and a copy of this Resolution to Rick Peo, Chief Assistant City Attorney, for transmittal to Hawkins Construction Company.

Adopted this _____ day of _____, 2012.

Introduced by:

_____

Approved as to Form & Legality:

West Haymarket Joint Public Agency
Board of Representatives

_____
Legal Counsel for
West Haymarket Joint Public Agency

_____
Chris Beutler, Chair

_____
Tim Clare

_____
Eugene Carroll

WEST HAYMARKET JOINT PUBLIC AGENCY (JPA)
BID NO. 12-291

C O N T R A C T A G R E E M E N T

THIS JPA CONTRACT AGREEMENT ("Contract") is made and entered into as of the _____ day of _____, 2012, by and between **HAWKINS CONSTRUCTION COMPANY**, hereinafter called Contractor, and the **WEST HAYMARKET JOINT PUBLIC AGENCY**, hereinafter called JPA.

RECITALS

WHEREAS, JPA has caused to be prepared, in accordance with law, Specifications, Plans, and other Contract Documents for the Work herein described, and has approved and adopted said documents and has caused to be published a Notice to Bidders advertisement for and in connection with said Work, to wit:

West Haymarket Improvements –
Parking Lot, Festival Space and Pedestrian Bridge Project
Bid No. 12-291

WHEREAS, the Contractor, in response to such advertisement, has submitted to the JPA, in the manner and at the time specified, a sealed Bid in accordance with the terms of said advertisement.

WHEREAS, JPA, in the manner prescribed by law, has publicly advertised, opened, examined, and canvassed the Bids submitted in response to such advertisement, and as a result of such canvass has determined and declared the Contractor to be the lowest and best bidder for the said Work for the sum of Seven Million Two Hundred Seventy Thousand Four Hundred Eighty-Nine and 12/100th Dollars ($7,270,489.12). Copies of the Bid Opportunity Detail, Notice to Bidders, Addendum Nos. 1-4; Supplier Response, and the Contractor's Bid (collectively "Bid Documents") are attached hereto as Exhibit A.

WHEREAS, since the Work will be carried out within 50 feet of BNSF Property pursuant to a Temporary License/Right-of-Entry ("ROE"), the terms and conditions of the ROE and the Construction and Maintenance Agreement ("C&M Agreement") between BNSF and the City of Lincoln as assigned to the JPA ("C&M Agreement") are applicable to the performance of the Work and Contractor must comply with the applicable provisions of the C&M Agreement concerning work within 50 feet of BNSF Property including, but not limited to the BNSF Insurance Requirements. The C&M Agreement is attached hereto as Exhibit C.

WHEREAS, Contractor understands and acknowledges that American Recovery and Reinvestment Act (ARRA) tax-favored bonds will fund all or a portion of the Work and therefore this Contract is subject to the Davis-Bacon Act; and that the Contractor is required to comply with the Contract clauses in 29 C.F.R. §5.5(a) which are made part of this Contract.

WHEREAS, Contractor understands and acknowledges that since future use of the site will be for a surface parking lot, the Contractor is required to pay Davis-Bacon Act prevailing wages in accordance with Highway Construction General Wage Decision NE120034 dated 06/15/2012 ("NE34 Wage Decision").

WHEREAS, the NE34 Wage Decision is hereinafter referred to as the "Effective Wage Decision."

WHEREAS, the use of the term “City of Lincoln” in the C&M Agreement shall be deemed to refer to the JPA.

WHEREAS, the use of the term “Contracting Officer” in 29 C.F.R. parts 1, 3 and 5 shall be deemed to refer to the JPA.

WHEREAS, Contractor possesses certain skills, experience, education and competency to perform the Work on behalf of the JPA and the JPA desires to engage Contractor for such services on the terms and conditions provided herein.

WHEREAS, Contractor is willing and able to perform the Work in accordance with this Contract.

NOW, THEREFORE, in consideration of the mutual covenants and agreements of the Parties contained herein and incorporating all of the above Recitals into this Contract as if fully set forth herein, the Contractor and JPA have agreed and hereby agree as follows:

PERFORMANCE OF WORK - The Contractor agrees to (a) furnish all tools, equipment, supplies, superintendence, transportation, and other construction accessories, services, and facilities; (b) furnish all materials, supplies, and equipment specified to be incorporated into and form a permanent part of the complete Work; (c) provide and perform all necessary labor in a substantial and workmanlike manner and in accordance with the provisions of the Contract Documents; and (d) execute, construct, and complete all Work included in and covered by JPA’s official award of this Contract to the Contractor, such award being based on the acceptance by JPA of the Contractor’s Bid as set forth in Exhibit A.

CHANGE IN SCOPE OF SERVICES. If an additive or subtractive change in scope is encountered on the site or requested by the JPA, a detailed Proposed Change Order request is to be provided by the Contractor. This must include a breakout of the estimated labor, materials, tools, and equipment required to complete the actual work. The maximum markup for all other items not associated with the work shall be ten percent (10%). This is to include all onsite and

offsite overhead, all general conditions, profit, and any other costs not associated with the actual performance of the work.

BNSF CONTRACT REQUIREMENTS. Contractor agrees that the provisions in the C&M Agreement are made part of this Contract. Contractor agrees that if the Work will be performed within 50 feet of BNSF Property, Contractor will comply with the Contractor Requirements attached as Exhibit C to the C&M Agreement), including execution of a Contractor Right of Entry in the form of Exhibit C-1(A) attached to the C&M Agreement. Contractor understands and agrees that prior to commencing the Work, the Contractor must:

(a) Obtain all required insurance, evidenced by certificates of insurance as required by the JPA, City Legal, BNSF, and any other required insurance.

(b) Submit the signed C-1A agreement and all required insurance certificates to BNSF@certfocus.com and to PC Sports.

(c) Submit copies of signed C-1A agreement and all required insurance certificates to Michael Schaefer (BNSF):

Michael Schaefer
Michael.Schaefer2@BNSF.com
402-458-7379 (office)
402-304-1437 (cell)
402-458-7457 (fax)

(d) Receive the BNSF executed C-1A agreement from Michael Schaefer.

Contractor further agrees that should it be necessary to enter upon the BNSF Property to perform the Work, Contractor must prior to such entry:

(a) Complete the BNSF Contractor Safety Orientation at www.contractororientation.com. All personnel who will be on site must take the safety training program and keep the issued ID card on their person at all times while on site. This includes employees of subcontractors employed by the Contractor.

(b) Complete the e-RAILSAFE security orientation training program at www.erailsafe.com. All personnel who will be on site must take the security training program and keep the issued ID card on their person at all times while on site. This includes employees of subcontractors employed by the Contractor.

(c) Send confirmation of the completion of the Contractor's Safety Orientation and e-RAILSAFE security orientation programs to the City Representative (PC Sports) and to Michael Schaefer, along with a list of all personnel who have taken both programs. This includes employees of subcontractors employed by the Contractor.

(d) Assume and comply with the terms and conditions of any right-of-entry agreement, license and/or easement between BNSF and the JPA governing access to such BNSF Property.

COMPENSATION - JPA agrees to pay to the Contractor for the performance of the Work embraced in this Contract, and the Contractor agrees to accept as full compensation therefore, the sums and prices for all Work covered by and included in the Contractor's Bid awarded by the JPA to the Contractor award, payment thereof to be made in the manner provided in Article VIII of the City of Lincoln Standard Specifications for Municipal Construction (2011 Edition).

COMPLETION DATE - The Contractor agrees that the Work in this Contract shall begin as soon after the Notice to Proceed as is necessary for the Contractor to complete the Work within the number of calendar days allowed and prior to the stated completion date.

INDEMNIFICATION - The following Indemnification provisions are in addition to and not in lieu of the Assumption of Liability and Indemnification provision in Article VI.B. of the City of Lincoln Standard Specifications for Municipal Construction (2011 Edition).

A. INDEMNIFICATION OF JPA. Contractor agrees to defend, indemnify and hold harmless JPA to the same extent and under the same terms and conditions as required by the Indemnification of JPA in the Indemnification and Insurance Requirements for All West Haymarket Joint Public Agency Contracts included as part of the Other Attached Contract Documents attached hereto as Exhibit D.

B. INDEMNIFICATION OF BNSF. Contractor understands and acknowledges that the JPA under the C&M Agreement is required to require the Contractor to release, defend and indemnify BNSF to the same extent and under the same terms and conditions as the JPA is required to release, defend and indemnify BNSF. Therefore, Contractor agrees to defend, release, indemnify and hold harmless BNSF to the same extent and under the same terms and conditions as the JPA is required to release, defend and indemnify BNSF in the C&M Agreement and as required in the Contractor's Right of Entry.

INSURANCE – The following insurance requirements are in lieu of the Insurance Requirements for all City Contracts found in Article X.B. of the City of Lincoln Standard Specifications for Municipal Construction (2011 Edition).

A. JPA Insurance Requirements. Contractor shall at all times during the term of this Agreement purchase and maintain in place insurance coverage as required by the Insurance Requirements for All West Haymarket Joint Public Agency Contracts included as part of the Other Attached Contract Documents attached hereto as Exhibit D.

B. BNSF Insurance Requirements. Contractor shall at all times during the term of this Contract purchase and maintain in place insurance coverage as required by the Insurance requirements of BNSF found in the C&M Agreement (Exhibit C).

Contractor agrees to provide all types of insurance required by either the JPA or BNSF. Contractor will furnish coverages against any and all perils required by either the JPA or

BNSF. In the event there is a difference between the JPA and BNSF coverage limits, Contractor will provide the larger amount satisfying both JPA and BNSF requirements.

DAVIS-BACON ACT – Contractor agrees to comply with the Davis-Bacon Act. Contractor further agrees to comply with contract clauses set forth in 29 C.F.R. §5.5(a) included as part of the Other Attached Contract Documents (Exhibit D) which provide in part that Contractor shall:

- On a weekly basis pay all laborers and mechanics not less than the federal prevailing wages listed in the wage determinations included in the contract;
- Submit weekly certified payroll records to the JPA; and
- Post the applicable Davis-Bacon wage determinations with the Davis Bacon poster (WH-1321) on the job site in a prominent and accessible place where they can be easily seen by the Contractor's workers.

Contractor further agrees to pay the prevailing wages set forth in the Effective Wage Decision. Said Effective Wage Decision is included in the Other Attached Contract Documents (Exhibit D). Contractor agrees to attach the Effective Wage Decision and include and/or incorporate the 29 C.F.R. §5.5(a) contract clauses in any subcontract in connection with the Work. Contractor shall also include a clause in any subcontract that the subcontractor shall attach the Effective Wage Decision and include and/or incorporate the 29 C.F.R. §5.5(a) contract clauses in any lower tier subcontract. Contractor shall be responsible for the compliance by any subcontractor or lower tier subcontractor with all the contract clauses in 29 C.F.R. §5.5(a) and payment of prevailing wages in accordance with the Effective Wage Decision.

NEB. REV. STAT. § 77-1323 CERTIFIED STATEMENT – Contractor, pursuant to the requirements of Neb. Rev. Stat. § 77-1323, has executed the Certified Statement attached hereto as part of Exhibit D certifying that all equipment to be used in performance of the Work, except that acquired since the assessment date has been assessed for the current year. Contractor understands and acknowledges that under Neb. Rev. Stat. §77-1324, any person, partnership, limited liability company, association, or corporation falsifying any statement required by Neb. Rev. Stat. § 77-1323 shall be guilty of a Class IV misdemeanor.

CONTRACT DOCUMENTS - The Contract Documents comprise the Contract, and consist of the following, whether or not attached hereto:

1. Bid Documents (Exhibit A).
2. Exhibit B – Intentionally Omitted.
3. Construction and Maintenance Agreement (Exhibit C).
4. Other Attached Contract Documents (Exhibit D).
   a. Commentary to Accompany Construction Bonds.
   b. Construction Performance Bond.
   c. Construction Payment Bond.
   d. Indemnification and Insurance Requirements for all West Haymarket Joint Public Agency Contracts (approved March 2012).
   e. Executive Order No 83319.
   f. 29 C.F.R. § 5.5(a) Contract Provisions.

g. Effective Wage Decision.
h. Certified Statement Pursuant to Neb. Rev. Stat. § 77-1323
i. Contractor Certification of Compliance, NPDES Dewatering Discharge Permit No. NEG 671000.

5. Other Non-Attached Contract Documents.
   a. City of Lincoln Standard Specifications for Municipal Construction (2011 Edition). References to City in the Standard Specifications shall mean JPA, references to City Project Manager shall mean PC Sports. Notwithstanding any provisions to the contrary in the Standard Specifications, Change Orders shall be approved in accordance with the JPA's Change Order Process adopted by JPA Resolution No. WH00195.
   b. Lincoln Standard Plans 2010.
   c. ROE.
   d. Special Provisions. West Haymarket Joint Public Agency (2012) Haymarket Infrastructure Improvements Haymarket Parking Lot Preliminary Grading Project No. 870201A.
   e. Plan/Drawings and Geotechnical Report.
   f. Environmental Contingency Plan.
   g. North 48th Street Solid Waste Facility Location Map.
   h. North 48th Street Grading Plan Sheet 1 and Sheet 2.
   i. Beneficial Soils and Construction and Demolition Waste Materials Requirements.
   j. Contractor Certification of Compliance - NPDES Dewatering Discharge Permit No. NEG671000.
   k. Contractor Qualification Form.
   l. Contractors Project Manager Qualification Form.
   m. Any executed Addenda or Change Orders.
   n. Sales Tax Exempt Forms (to be provided upon award of the Special Purchase).
      i. Form of Nebraska Resale or Exempt Sales Certificate.
      ii. Form of Purchasing Agent Appointment.
      <u>Note</u>: Any portion of this project used for providing water service, such as pipe for water mains, are not tax exempt and are subject to sales and use tax.
      <u>Note</u>: The remainder of this project, including items exclusively used for providing fire protection, such as fire hydrants, is exempt from sales and use tax.
   o. Requirements in 29 C.F.R. parts 1, 3 and 5.
   p. Report of Geotechnical Exploration – West Haymarket Pedestrian Bridge and Embankment, Lincoln, Nebraska.
   q. Environmental Contingency Plan – West Haymarket Redevelopment Site.
   r. Any other Bid Documents and/or Bid Attachments listed in the Bid Opportunity Detail not attached as part of Exhibit A or listed in the above list of other Non-Attached Contract Documents

This Contract, together with the other Contract Documents herein above mentioned, form this Contract and they are as fully a part of the Contract as if hereto attached or herein repeated.

The Contractor and JPA hereby agree that all the terms and conditions of this Contract shall, by these presents, be binding upon themselves, and their heirs, administrators, executors, legal and personal representatives, successors, and assigns.

IN WITNESS WHEREOF, the Contractor and JPA do hereby execute this Contract.

CONTRACTOR: **HAWKINS CONSTRUCTION COMPANY**

By: _____
Title: _____

JPA: **WEST HAYMARKET JOINT PUBLIC AGENCY**

By: _____
Chris Beutler, Chairperson of the West Haymarket Joint Public Agency Board of Representatives

EXHIBIT A

Bid Documents

Return to Login • Supplier Registration

Bid Opportunity Detail

Bid Number	12-291 Addendum 4 (Haymarket Improvements - Parking Lot, Festival Space and Pedestrian Bridge Project 870201 (PW/U - Eng. Services))
Close Date & Time	12/5/2012 2:30:00 PM Central
Bid Duration	1 month 3 days

Bid Information

Bid Type	Bid
Issue Date & Time	11/2/2012 2:58:45 PM Central
Close Date & Time	12/5/2012 2:30:00 PM Central
Bid Status	Unsealed
Bid Notes	PreBid on Nov. 14th at 1:30 pm at Olsson Associates, 1111 Lincoln Mall in the West Haymarket Arean Conf Room, 2nd Floor, east side of bldg. If you need assistance in preparing your bid, 1) Click the "Help" button in the upper right hand corner of any screen; 2) Contact our office at 402-441-7417 to set up a training session in Purchasing or assistance over the phone.

Contact Information

Contact Name	Vince M. Mejer
Address	Purchasing\City & County 440 S. 8th St. Lincoln, NE 68508 USA
Contact Phone	(402) 441-8314
Contact Fax	(402) 441-6513
Contact Email	vmejer@lincoln.ne.gov

Award Attachments

Location	File Name	Description
Header	Bid Tabs.pdf (610KB)	ITEMIZED PRICING

Bid Documents

Document	Format	Description
Invitation Document	Adobe (PDF)	PDF Invitation to Bid
Bid Tabulation by Supplier Spreadsheet	Spreadsheet (XLS)	Bid Tabulation by Supplier Spreadsheet
Bid Tabulation by Line Item Spreadsheet	Spreadsheet (XLS)	Bid Tabulation by Line Item Spreadsheet

Bid Attachments

Location	File Name	Description
Header	12-291 Adv.pdf (30KB)	Notice to Bidders
Header	INS, Bond and 29 CFR.pdf (1.76MB)	Insurance, Sample Bond and 29 CFR
Header	12-291 DB Rates.pdf (17KB)	Davis-Bacon Wage Rates
Header	Empl_Class_Act_EO.pdf (288KB)	Employee Classification Act, Executive Order 83319
Header	Empl_Class_Act_Aff.pdf (52KB)	Employee Classification Act Affidavit
Header	870201 Special Provisions Parking Lot and Ped Bridge Watermark.pdf (1.76MB)	Special Provisions
Header	FTP site.pdf (327KB)	Plan/Drawings and Geotechnical Report
Header	ECP Revision 3 2-3-12.pdf (2.06MB)	Environmental Contingency Plan
Header	North 48th Street Solid Waste Facility Location Map.pdf (3.81MB)	Location Map

EXHIBIT A OF CONTRACT AGREEMENT

Header	N 48th Street Grading Plan Sheet 01.pdf (1.33MB)	Grading Plan Sheet 1
Header	N 48th Street Grading Plan Sheet 02.pdf (362KB)	Grading Plan Sheet 2
Header	North 48th Street Solid Waste Facility Beneficial Soils.pdf (64KB)	Beneficial Soils and Construction and Demolition Waste Materials Requirements
Header	Contractor Certification of Compliance NPDES Dewatering Discharge Permit No. NEG671000.pdf (12KB)	Contractor Certification of Compliance
Header	Contractor Qualification Form.xlsx (14KB)	Contractor Qualification Form
Header	Contractors Project Manager Qualification Form.xlsx (14KB)	Contractors Project Manager Qualification Form
Header	12-291 Adn1.pdf (6KB)	Addendum No. 1
Header	Sample Agr-FestivalSpacePedBridge 12-291.pdf (49KB)	Sample Contract (Per Addendum No. 1)
Header	FTP site.pdf (327KB)	Addendum No. 2
Header	ADDENDUM NO 3 - Seal Haymarket Parking Lot and Ped Bridge 870201.pdf (4.48MB)	Addendum No. 3
Header	ADDENDUM NO 4 - Seal Haymarket Parking Lot and Ped Bridge 870201.pdf (943KB)	Addendum No. 4
Line 3	12-291 Bid Proposal.XLS (213KB)	Itemized Pricing (Per Addendum No. 3)

Event Activities

Activity Date	Title	Description
11/14/2012 1:30:00 PM CST	PreBid	PreBid on Nov. 14th at 1:30pm at Olsson Associates, 1111 Lincoln Mall in the West Haymarket Arena Conf Room, 2nd Floor, east side of the building.
12/5/2012 12:00:00 PM CST	General Contractors - Call 402-441-7417 or e-mail purchasing@lincoln.ne.gov to be added to this list.	Suppliers who will bid as a general contractor on this bid.

Activity Participants

Supplier Name	City	State	Intent
United Contractors, Inc.	Johnston	IA	
Sampson Construction Company, Inc.	Lincoln	NE	
Hawkins Construction Company	Omaha	NE	
McC, L.L.C.	Omaha	NE	
Commercial Construction Inc.	Lincoln	NE	

12/5/2012 12:00:00 PM CST	Sub-Contractors - Call 402-441-7417 or e-mail purchasing@lincoln.ne.gov to be added to this list.	Suppliers who will bid as a sub-contractor.

Activity Participants

Supplier Name	City	State	Intent
M.E. Collins Contracting Co., Inc.	Wahoo	NE	
T.J.Osborn Construction Inc.	Lincoln	NE	

EXHIBIT A OF CONTRACT AGREEMENT

Advertise 1 time
Friday, November 2, 2012

City of Lincoln/Lancaster County
Purchasing Division
NOTICE TO BIDDERS

Sealed bids will be received by the Purchasing Agent of the City of Lincoln/Lancaster County, Nebraska **BY ELECTRONIC BID PROCESS** until: **12:00 pm, Wednesday, December 5, 2012** for providing the following:

Haymarket Improvement Parking Lot, Festival Space and Pedestrian Bridge Project Project 870201 Bid No. 12-291

A Pre-bid meeting will be held Wednesday, November 14, 2012 at 1:30 p.m., at Olsson Associates, 1111 Lincoln Mall in the West Haymarket Arena Conference Room, 2nd Floor, East Side of the Building. All interested Vendors are strongly encouraged to attend.

Bidders must be registered on the City/County's E-Bid site in order to respond to the above Bid. To Register go to: lincoln.ne.gov (type: e-bid - in search box, then click "Supplier Registration")

Upon e-mail notification of registration approval, you may go to the E-Bid site to respond to this bid. Questions concerning this bid process may be directed to City/County Purchasing at (402) 441-8314 or (402) 441-7410 or *vmejer@lincoln.ne.gov*

EXHIBIT A OF CONTRACT AGREEMENT

Addendum No. 1

Haymarket Improvements - Parking Lot,

Festival Space and Pedestrian Bridge Project 870201

12-291

Addenda are instruments issued by the City prior to the date for receipt of offers which will modify or interpret the specification document by addition, deletion, clarification or correction.

Please acknowledge receipt of this addendum in the space provided in the Attribute Section. Be advised of the following changes and clarifications to the City's specification and bidding documents:

1. Added Sample Contract to the Attachment Section of the Bid.

Dated this 6nd day of November 2012.

Vince M. Mejer
Purchasing Agent

EXHIBIT A OF CONTRACT AGREEMENT

ADDENDUM NO. 2

WEST HAYMARKET JOINT PUBLIC AGENCY
HAYMARKET INFRASTRUCTURE IMPROVEMENT
PARKING LOT, FESTIVAL SPACE & PEDESTRIAN BRIDGE
PROJECT NO. 870201
BID NO. 12-291

Addenda are instruments issued by the Purchasing Office prior to the date or time for receipt of offers which will modify or interpret the specifications document by addition, deletion, clarification or correction.

Please acknowledge receipt of this addendum in the space provided in the Attribute Section.

Please be advised of the following changes and clarifications to the City's specification and bidding documents:

1. Refer to the Notice to Bidders and add the following:

   "Bidders who would like to prequalify as approved contractors for completing the pedestrian bridge construction work on this project shall submit their completed Contractor Qualification Form and Contractors Project Manager Qualification Form to the Purchasing Agent no later than 1:00 pm on Wednesday November 21, 2012. The JPA shall review the information provided by the prospective bidders and shall issue an addendum no later than November 28, 2012 identifying contractors that have prequalified for completing the bridge construction work on this project. Contractor's who do not submit their qualification forms by November 21, 2012 are still eligible to submit bids and must provide the qualification information with their respective proposal. The JPA reserves the right to reject their bid if it is determined by the JPA that the contractor has not demonstrated that they have the necessary qualifications to complete the construction work associated with the pedestrian bridge."

2. Refer to the Bid Form for the Base Bid and the Summary of Quantities, Sheets 2 through 5 in the plans. The following bid items have been added:

24.03230	Conduit, 3", Trenched	600 Lin. Ft.
24.05009	Pull Box T9	1 Each
50.00035	Granular Material for Subgrade Stabilization	4,200 Tons
50.00040	Geogrid	5,000 Sq. Yd.
50.00040	Site Grading	35,000 Sq. Yd.

This document was originally approved and sealed on November 16, 2012 by Thomas A. Leikam, a licensed professional engineer in the State of Nebraska E-6290. This media should not be considered a certified document.

The following bid quantities have been revised to reflect the quantities as shown below:

24.03210	Conduit, 1", Trenched	1,850 Lin. Ft.
24.03215	Conduit, 1 ½", Trenched	17,650 Lin. Ft.
24.12208	Cable, No 8 Circuit Ground	17,430 Lin. Ft
24.12504	Cable, No 4 Street Light	8,970 Lin. Ft
50.00005	Cable, No 6 RC	4,320 Lin. Ft

3. Refer to the Special Provisions. Add the following Special Provision for Site Grading:

SUBGRADE STABILIZATION

It is anticipated that a portion of the subgrade area for the excavation work in the lower portions of the parking lot may need to be stabilized in order to complete the work and provide a stable foundation for the pavement. The proposed method of stabilization is the use of a crushed rock material placed over a geogrid material. For this method the granular material shall consist of the "well-graded" crushed rock material as outlined in the State of Nebraska Standard Specification for Highway Construction Table 1033.10 for Foundation Course Mixture. The geogrid material shall be placed on the grade before placement of the crushed rock stabilization materials. Approved geogrid materials are Mirafi BXG11, Tensar BX1100, or industry equivalent. The geogrid shall be placed in accordance with the Geogrid Fabricator's installation and overlapping recommendations.

A lift of stabilization rock 12-inches in depth (after compaction) shall be pushed out in advance of light-size construction equipment. The crushed rock stabilization material shall be compacted using light-sized construction equipment and shall achieve a minimum of 98% compaction as determined using ASTM D 698. The Contractor shall assume that the first couple lifts of compacted soil placed atop the crushed rock stabilization material will need to be placed and compacted using the same installation technique discussed above for the crushed rock stabilization material (i.e., by pushing each lift of soil out in front of light-sized construction equipment and compacted using light- to moderate-sized construction equipment).

It shall be the responsibility of the Contractor to select the size of construction equipment that will be required to place and compact the crushed-rock stabilization materials and first several lifts of compacted fill materials while avoiding disturbance of the underlying natural subsurface materials. A layer of "geotextile fabric" (i.e., such as Mirafi 600X, Trevira 011/450, or industry equivalent) will not be required in addition to the geogrid specified above, as long as the gradation of the crushed rock stabilization material meets the specifications shown in the geotechnical report.

This document was originally approved and sealed on November 16, 2012 by Thomas A. Leikam, a licensed professional engineer in the State of Nebraska E-6290. This media should not be considered a certified document.

Approved geogrid materials as outlined in this Special Provision for use in subgrade stabilization shall be measured and paid for by the square yard at the contract unit price bid for the pay item "Geogrid". Granular Material for subgrade stabilization shall be measured and paid for by the ton at the contract unit price bid for the pay item "Granular Material for Subgrade Stabilization". Such payment for the geotextile and granular material shall be full compensation for the work required to stabilize the subgrade in accordance with the requirements outlined in the Geotechnical Report for "Stabilizing with a Geotextile and Granular Materials.

4. Refer to the Special Provisions. Add the following Special Provision for Site Grading:

SITE GRADING

The current preliminary grading project for the construction of the embankment for the north approach to the pedestrian bridge and rough grading of the eastern portion of the parking lot that lies outside the 500 foot limit of the levee will require some minor grading to obtain the finished grades shown on the plans. Grading of the areas outside of the embankment that have been rough graded for the parking lot shall be completed by the Contractor to obtain the required subgrade elevations shown for the new pavement. Measurement and payment for the completion of this work shall be by the square yard in accordance with the price bid for the item "Site Grading". Said payment shall be full compensation for furnishing all labor, equipment and materials necessary to grade the site to the proposed subgrade elevations including all minor excavation or placement of fill materials to achieve the required grades.

5. Refer to the Special Provisions, Page 4, Special Bidding Conditions (Incentives/Disincentives). Delete the first paragraph and replace with the following:

Schedule is a critical element of the West Haymarket Projects. The work to be completed under this contract is critical to the opening and use of the new Pinnacle Bank Arena. As such there is a benefit to the JPA to have this project completed as soon as practical. To this extent incentives have been included as part of this contract. If the Contractor completes the work outlined for substantial completion of the overall project (bridge construction, parking lot paving, walkways and other items as stipulated in these Special Provisions), ahead of the date stipulated in these Special Provisions, then the Contractor will receive incentive payments of $2,500 per day for each full day the work is completed prior to the September 6, 2012 substantial completion date, up to a maximum of $75,000. If the Contractor fails to complete all work associated with the substantial completion of the Project by September 6, 2013, considering approved extensions of time, then disincentives will be charged for each calendar day that the items of work required for substantial completion remain unfinished. Disincentives shall be $2,500 per day for each day that the work outlined for

This document was originally approved and sealed on November 16, 2012 by Thomas A. Leikam, a licensed professional engineer in the State of Nebraska E-6290. This media should not be considered a certified document.

substantial completion of the overall project remains unfinished. Furthermore if the Contractor fails to substantially complete the bridge construction by July 28, 2013, considering approved extensions of time, then disincentives will be charged for each calendar day that the items of work required for substantial completion of the bridge and the turnover of the structure to the aesthetic contractor to allow them to begin their work is delayed.

6. Refer to the Special Provisions, Page 11, Construction Within 500 Foot Limit of The Levee. Delete the last paragraph and replace with the following:

   The Contractor shall not utilize granular bedding for the construction of storm sewers or other utility lines in this area including conduits and/or direct buried cable. All bedding and backfill for utility work shall utilize suitable existing on-site cohesive soils or Engineer approved imported cohesive borrow material. All trench backfills shall be compacted as stipulated in the Geotechnical Report. The Contractor shall thoroughly backfill and compact all trenches as the utilities are constructed and shall not leave any open excavations for an extended period of time. Furthermore the Contractor shall have suitable soils and equipment available on site at all times to fill and compact any open excavations if it is determined by the Engineer that there is a potential for heavy rain or high waters at Salt Creek that may affect the levee system.

7. Refer to the Special Provisions, Page 79, Pervious Concrete Pavement. Delete the last paragraph for the Basis of Payment and replace with the following:

   Pervious concrete pavement that has been completed in conformance with the Plans and Standard Specifications and accepted by the Engineer shall be measured and paid for at the contract unit price bid per square yard for the pay item "Pervious Concrete Pavement". Such Payment shall be full compensation for all preparation of subgrade, subdrain pipes and fittings, aggregate base material, pervious concrete, forms or slip forming, materials, labor, tools, equipment, jointing, finishing, curing, sawing, sealing, backfilling, guarantee, cleanup and incidentals necessary to complete the work.

8. Refer to the Special Provisions, Page 91, BNSF Railway Special Provisions. Delete the last paragraph and replace with the following:

   The JPA will pay for flagging up to a maximum of 210 flagging days. A flagging day will be considered as any day that the JPA incurs costs associated with a BNSF flagger being assigned to the project regardless of the actual hours worked at the site by the Contractor. This shall include any flagging days that may be required after the bridge has been substantially completed when flagging is required to complete other work at the site such

This document was originally approved and sealed on November 16, 2012 by Thomas A. Leikam, a licensed professional engineer in the State of Nebraska E-6290. This media should not be considered a certified document.

as site fencing or seeding and when flagging is not required as part of the work being completed by the aesthetic contractor for the bridge.

9. Refer to the plans, Site Lighting Plans, sheets 112 through 120. Add the attached sketch that outlines changes to the conduit layout in the area of the MSE wall and stairs.

10. Refer to the plans, Special Plan 1, Pedestrian Bridge Plans, sheets 132 through 166. Add the attached plan sheets for Pier No. 4, for informational purposes only. This pier is being constructed as part of the current Preliminary Grading Project and the construction as outlined on these plans is not part of the scope of work for this project.

11. Refer to the plans, Special Plan 1, Pedestrian Bridge Plans, sheet 141. Refer to the detail "Pier No. 2 Section" and revise the dimension from the face of the column to the outside edge of the footing from 8'-0" to 8'-3". There are no changes in bid quantities as a result of this change.

12. The attached minutes from the pre-bid meeting are incorporated as part of the bid documents.

Dated this 16th day of November 2012.

This document was originally approved and sealed on November 16, 2012 by Thomas A. Leikam, a licensed professional engineer in the State of Nebraska E-6290. This media should not be considered a certified document.

LINCOLN haymarket infrastructure Team	WEST HAYMARKET	PROJECT NO. 870201	SHEET NO.
		Date 10/25/2012 Horz. Scale 1" 50'	Drawn JAK Checked Approved

EXHIBIT A OF CONTRACT AGREEMENT

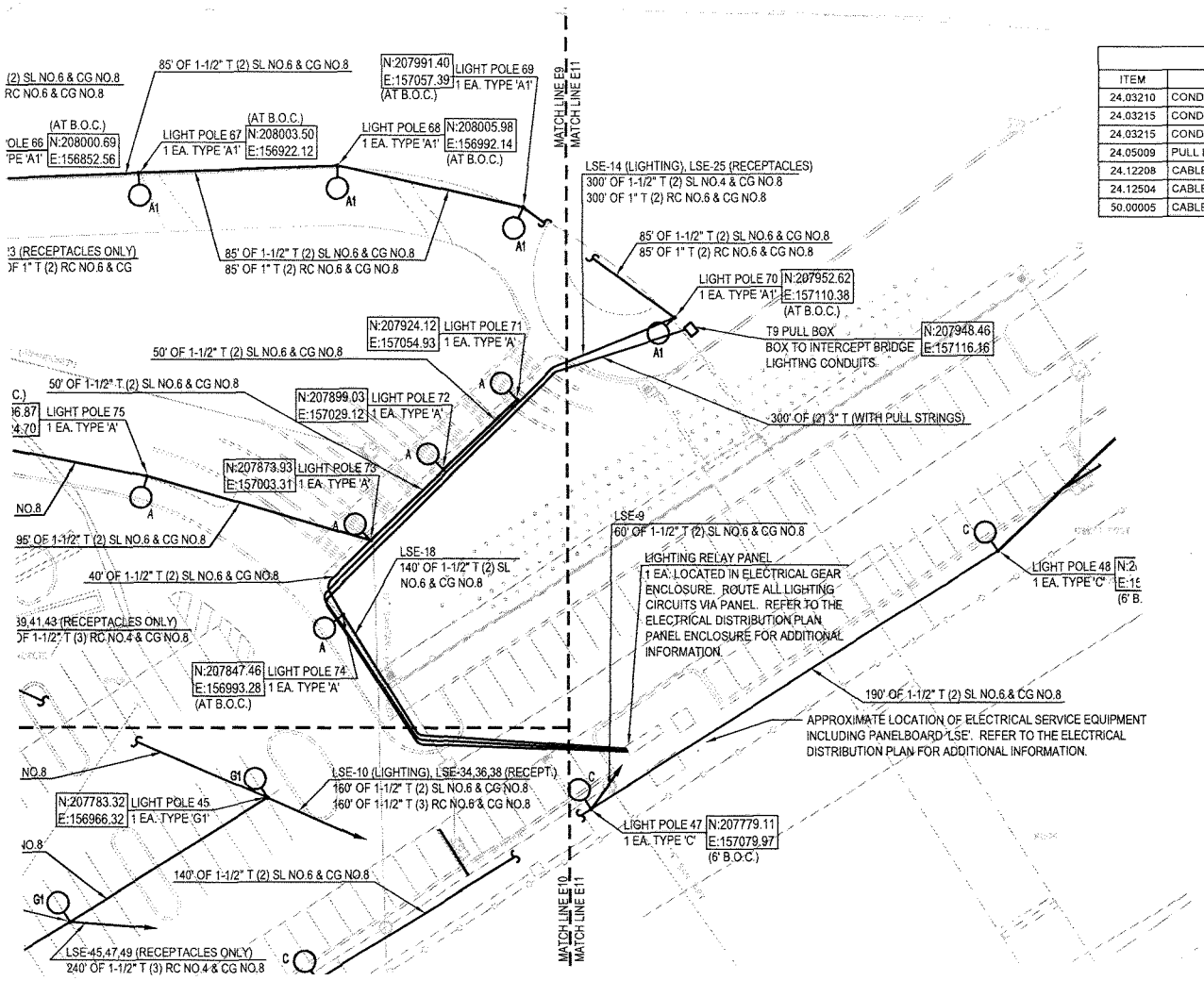

SITE LIGHTING PLAN SDE1
SCALE 1" = 40'-0"

ADDITIONAL SITE LIGHTING ITEMS			
ITEM	ITEM DESCRIPTION	UNIT	QUANTITY
24.03210	CONDUIT, 1", TRENCHED	LIN. FT.	50
24.03215	CONDUIT, 1 1/2", TRENCHED	LIN. FT.	50
24.03215	CONDUIT, 3", TRENCHED	LIN. FT.	600
24.05009	PULL BOX T9	EACH	1
24.12208	CABLE, NO 8 CG	LIN. FT.	100
24.12504	CABLE, NO 4 SL	LIN. FT.	100
50.00005	CABLE, NO 6 RC	LIN. FT.	100

0 20 40

PROFESSIONAL ELECTRICAL ENGINEER
JENNIFER A. KLEIN
E-10657
STATE OF NEBRASKA

SUPPLEMENTAL SITE LIGHTING PLAN (ADD#2)

117-E-97

R/1 09/06/2012
R/2 10/11/2012

JPA PROJECT NO.	SHEET NO.
870201A	40

STRUCTURE NUMBER

- THE CITY OF LINCOLN, NE -

- WEST HAYMARKET PEDESTRIAN BRIDGE OVER BNSF RR -

- PIER 4 -

- NOTES -

This structure is designed in accordance with AASHTO LRFD Bridge Design Specifications (AASHTO LRFD). 5TH Edition. AASHTO Guide Specifications for Design of Pedestrian Bridges (AASHTO Guide Specifications) 2009 Edition and NDOR BOPP Manual. 2011.

All reinforcing steel shall be epoxy coated and conform to the requirements of ASTM A615/A615M, Grade 60.

- The minimum clearance, measured from the face of the concrete to the surface of any reinforcing bar, shall be 3", except where otherwise noted.
- All dimensions shown are in the horizontal plane only.

The location of all underground utility facilities may not be indicated in these plans. underground utilities, whether indicated or not will be located and flagged by the Utility company at the request of the contractor. No excavation will be permitted in the area of underground facilities until all such facilities have been located and identified to the satisfaction of all parties. The excavation must be accomplished with extreme care in order to avoid any possibility of damage to the utilities facility.

All pile spacings are given at the bottom of concrete.

R/2 The minimum clearance between all conduits in bridge, shall be 6".

- QUANTITIES -

PIER NO. 4 EXCAVATION		1 LUMP SUM
CLASS 47B-4000 CONCRETE FOR BRIDGE		186.6 CY
PIERS	186.6 CY	
EPOXY COATED REINFORCING STEEL		28,338 ~~27,184~~ LB R/1
PIERS	~~27,184~~ LB	28,338 R/1
16"Φ AUGURED CAST-IN-PLACE CONCRETE PILES		1,824 LIN. FT.
4"Φ CONDUIT IN BRIDGE		72 LIN. FT. R/2
~~1½"Φ CONDUIT IN BRIDGE~~		~~36 LIN. FT.~~
½"Φ CONDUIT IN BRIDGE		50 LIN. FT. R/2
2"Φ CONDUIT IN BRIDGE		72 LIN. FT. R/2
3"Φ CONDUIT IN BRIDGE		72 LIN. FT. R/2

- INDEX -

R/1 R/2 GENERAL NOTES, QUANTITIES & INDEX ____ 1
PILE LAYOUT ____ 2
R/1 R/2 PIER NO. 4 PLAN, ELEVATION & SECTION ____ 3
R/1 PIER NO. 4 SECTIONS ____ 4
R/1 R/2 PIER NO. 4 DETAILS ____ 5
R/1 BILL OF BARS ____ 6

OLSSON ASSOCIATES

118-A-41

This document was originally issued and sealed by Joel D. Rossman, E-8759, on 10-11-12. This media should not be considered a certified document.

PIER NO. 4
PEDESTRIAN BRIDGE / ARENA DECK SHARED PIER
GENERAL NOTES, QUANTITIES & INDEX

COUNTY LANCASTER
HWY. NO. NA
REF. POST. NA
STA. 23+79.17

LOCATION HAYMARKET PED. BRIDGE OVER BNSF
SKEW 0°
ROADWAY 20'-0"
DESIGN LIVE LOAD AASHTO PED. W/HO

DETAILED BY BMW
CHECKED BY SAH
DATE AUGUST, 2012
DESIGNED BY VBR

WEST HAYMARKET JOINT PUBLIC AGENCY

JOEL D. ROSSMAN E-8759

SPECIAL PLAN NO. -1

-1 / -6

PROJ: OA_BRIDGE-STRUCT
FEN: 11_Workorg\NDOR screen 253.tbl
USER: jsmith
DATE: 10/11/2012
DGN: ...\Pier 4\01-Pier 4 Cover.dgn

1-7-Bill

EXHIBIT A OF CONTRACT AGREEMENT

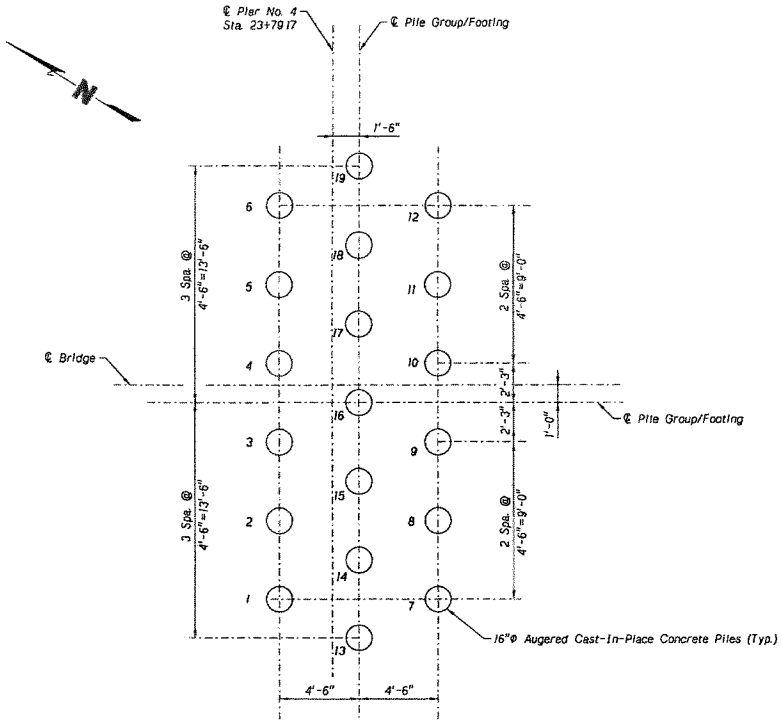

PILE LAYOUT
SCALE 1"=3'

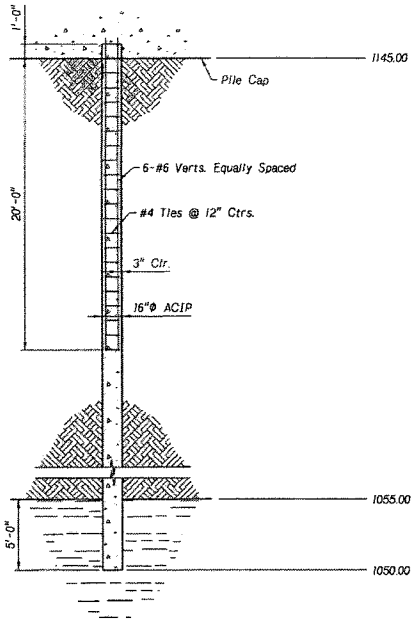

16"Φ AUGERED CAST-IN-PLACE CONCRETE PILE DETAIL
SCALE 1"=4'

AUGURED CAST-IN-PLACE CONCRETE (ACIPC) PILE DATA						
LOCATION	PILE NUMBER	TOP ELEVATION	MINIMUM DEPTH BELOW TOP (feet)	PILE DESIGN LENGTH (feet)	DESIGN PILE BEARING (tons/PILE)	PILE TYPE
Pier No. 4	1-19	1146.00	96.0	96.0	105	16"Φ ACP

OLSSON® ASSOCIATES

118-A-41

JPA PROJECT NO.	SHEET NO.
870201A	41

STRUCTURE NUMBER

LINCOLN Haymarket Infrastructure Teams

WEST HAYMARKET

COUNTY LANCASTER
HWY. NO. NA
REF. POST. NA
STA. 23+79.17

LOCATION HAYMARKET PED. BRIDGE OVER BNSF
SKEW 0°
ROADWAY 20'-0"
DESIGN LIVE LOAD AASHTO PED. W/H10

PIER NO. 4
PEDESTRIAN BRIDGE / ARENA DECK SHARED PIER
PILE LAYOUT

DESIGNED BY JBR
DETAILED BY BMW
CHECKED BY SAH
DATE AUGUST, 2012

WEST HAYMARKET JOINT PUBLIC AGENCY

PROFESSIONAL CIVIL ENGINEER JOEL B. ROSSMAN E-8739 STATE OF NEBRASKA

SPECIAL PLAN NO. 1

2/6

118-A-41

EXHIBIT A OF CONTRACT AGREEMENT

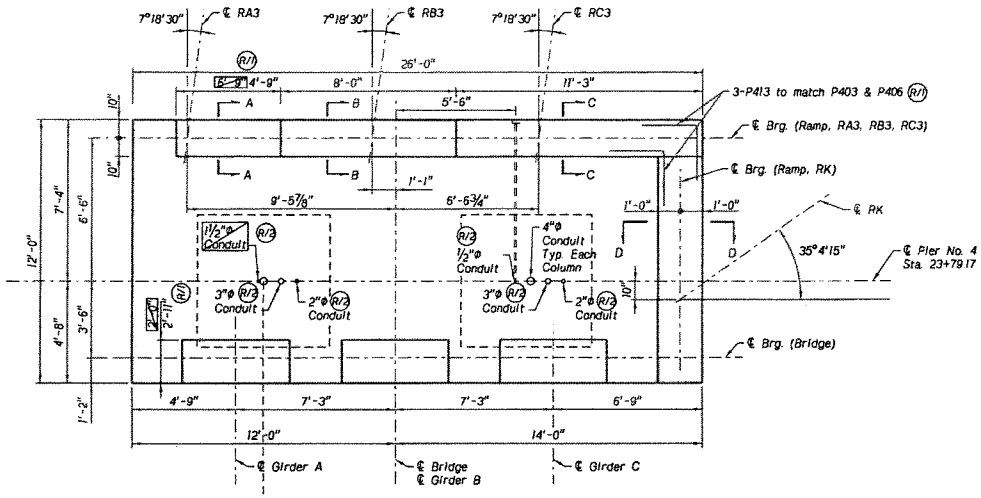

PIER NO. 4 PLAN
SCALE: ⅜"=1'-0"

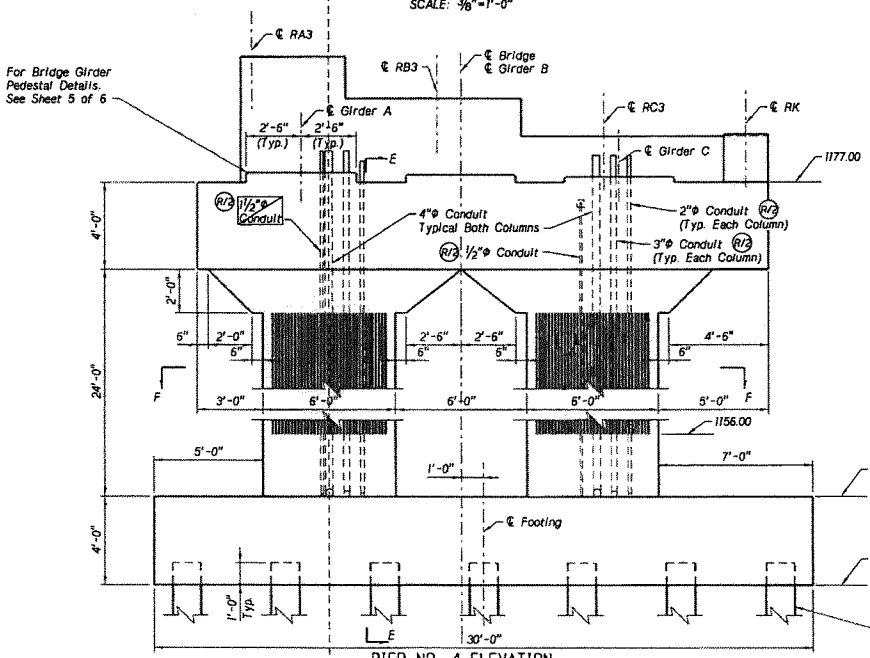

PIER NO. 4 ELEVATION
SCALE ⅜"=1'-0"

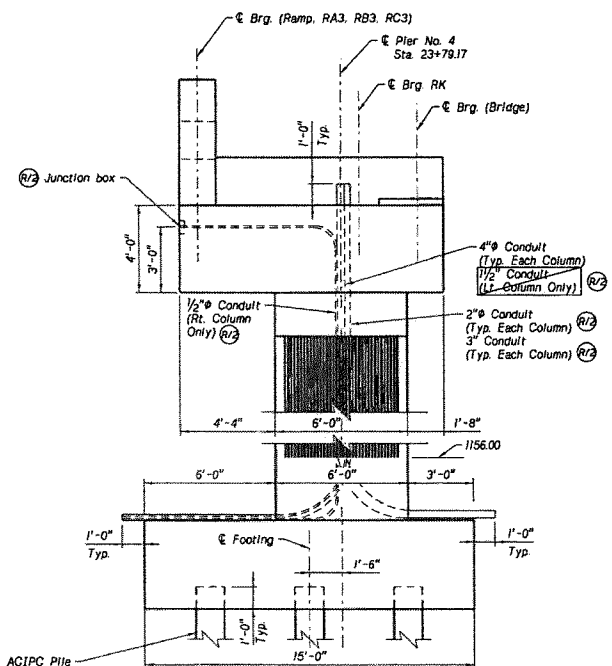

PIER NO. 4 SECTION
SCALE ⅜"=1'-0"

NOTE
For Section A-A, B-B, C-C D-D & E-E see Sheet 4 of 6
For Section F-F, see Sheet 5 of 6
For Pile Spacing, see Sheet 2 of 6

GIRDER SEAT ELEVATIONS	
GIRDER	PIER NO. 4
A	1177.50
B	1177.39
C	1177.28
RA3	1182.80
RB3	1180.89
RC3	1179.14
RK	1179.23

NOTE
(R/1) Seat Elevations at RA3, RB3, RC3, and RK shall be verified and coordinated with the Ramp Precast Supplier.
(R/1) Install 24 anchor bolts, provided by the Ramp Precast Supplier. Location of anchor bolts to be coordinated with Ramp Precast Supplier.

(R/1) 09/06/2012
(R/2) 10/11/2012

JPA PROJECT NO.	SHEET NO.
870201A	42

STRUCTURE NUMBER -

LINCOLN Haymarket Infrastructure Team

COUNTY LANCASTER
HWY. NO. NA
REF. POST. NA
STA. 23+79.17
LOCATION HAYMARKET PED BRIDGE OVER BNSF
SKEW 0°
ROADWAY 20'-0"
DESIGN LIVE LOAD AASHTO PED W/H10
PIER NO. 4
PEDESTRIAN BRIDGE / ARENA DECK SHARED PIER
PIER NO. 4 PLAN, ELEVATION & SECTION
DESIGNED BY JBR
DETAILED BY BMW
CHECKED BY SAH
DATE AUGUST, 2012

WEST HAYMARKET JOINT PUBLIC AGENCY

JOEL B. ROSSMAN E-8739 STATE OF KANSAS

OLSSON® ASSOCIATES

SPECIAL PLAN NO. 1 | 3/6

118-A-41

This document was originally issued and sealed by Joel B. Rossman, E-8739, on 10-11-12. This media should not be considered a certified document.

EXHIBIT A OF CONTRACT AGREEMENT

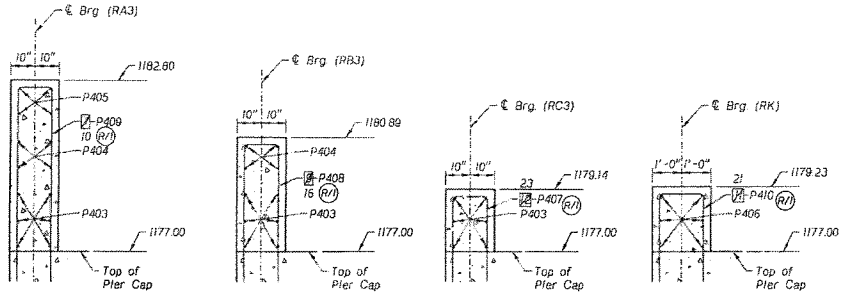

SECTION A-A
SCALE: 1/2"=1'-0"

SECTION B-B
SCALE 1/2"=1'-0"

SECTION C-C
SCALE: 1/2"=1'-0"

SECTION D-D
SCALE 1/2"=1'-0"

RAMP PEDESTAL SECTIONS

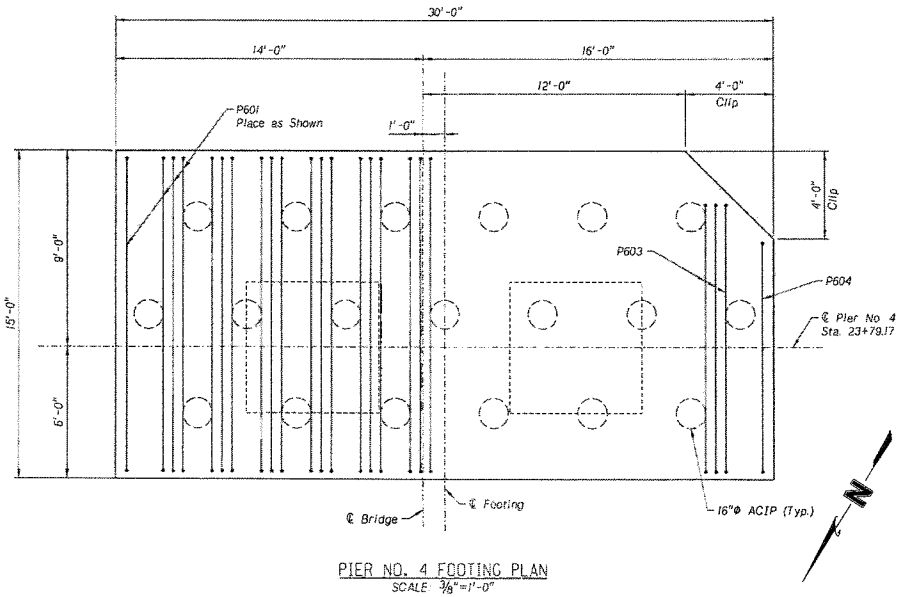

PIER NO. 4 FOOTING PLAN
SCALE: 3/8"=1'-0"

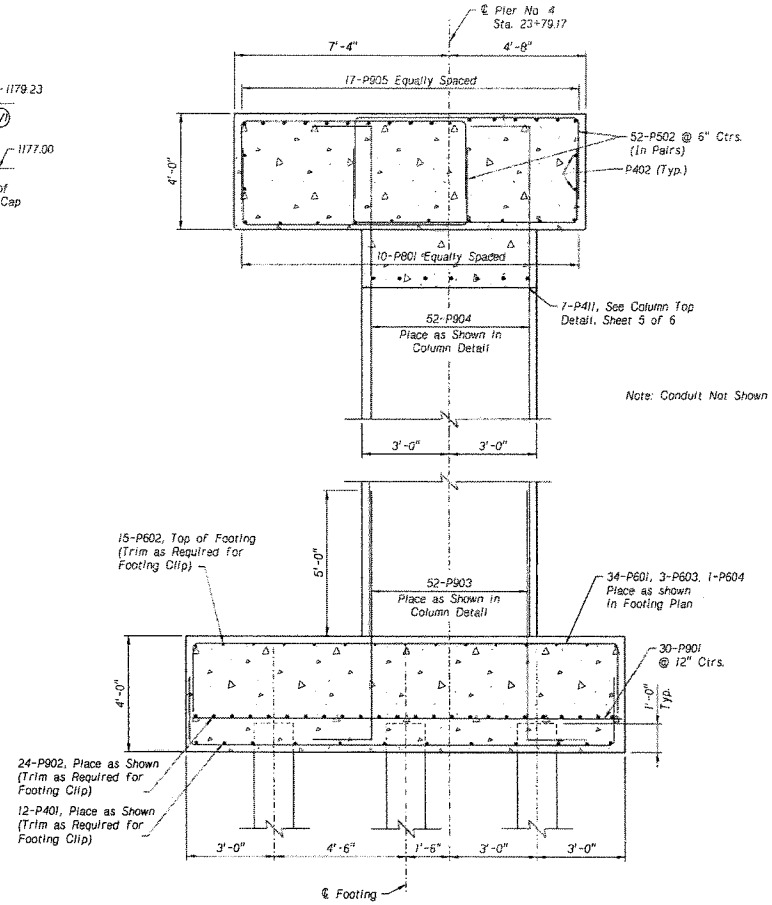

SECTION E-E
SCALE: 1/2"=1'-0"

OLSSON ASSOCIATES

118-A-41

(R/1) 09/06/2012	JPA PROJECT NO. 870201A
	SHEET NO. 43

STRUCTURE NUMBER

LINCOLN Haymarket Infrastructure Team

WEST HAYMARKET

PIER NO. 4
PEDESTRIAN BRIDGE / ARENA DECK SHARED PIER
PIER NO. 4 SECTIONS
DATE: AUGUST, 2012

COUNTY LANCASTER
HWY. NO. NA
REF. POST. NA
STA. 23+79.17
LOCATION HAYMARKET PED. BRIDGE OVER BNSF
SKEW 0°
ROADWAY 29'-0"
DESIGN LIVE LOAD AASHTO PED. W/HIG
DETAILED BY BMW
CHECKED BY SAH
DESIGNED BY JBR

WEST HAYMARKET JOINT PUBLIC AGENCY

PROFESSIONAL CIVIL ENGINEER JOEL B. ROSSMAN E-8739 STATE OF NEBRASKA

This document was originally issued and sealed by Joel B. Rossman, E-8739, on 9-6-12. This media should not be considered a certified document.

SPECIAL PLAN NO. 1

4/5

118-A-41

EXHIBIT A OF CONTRACT AGREEMENT

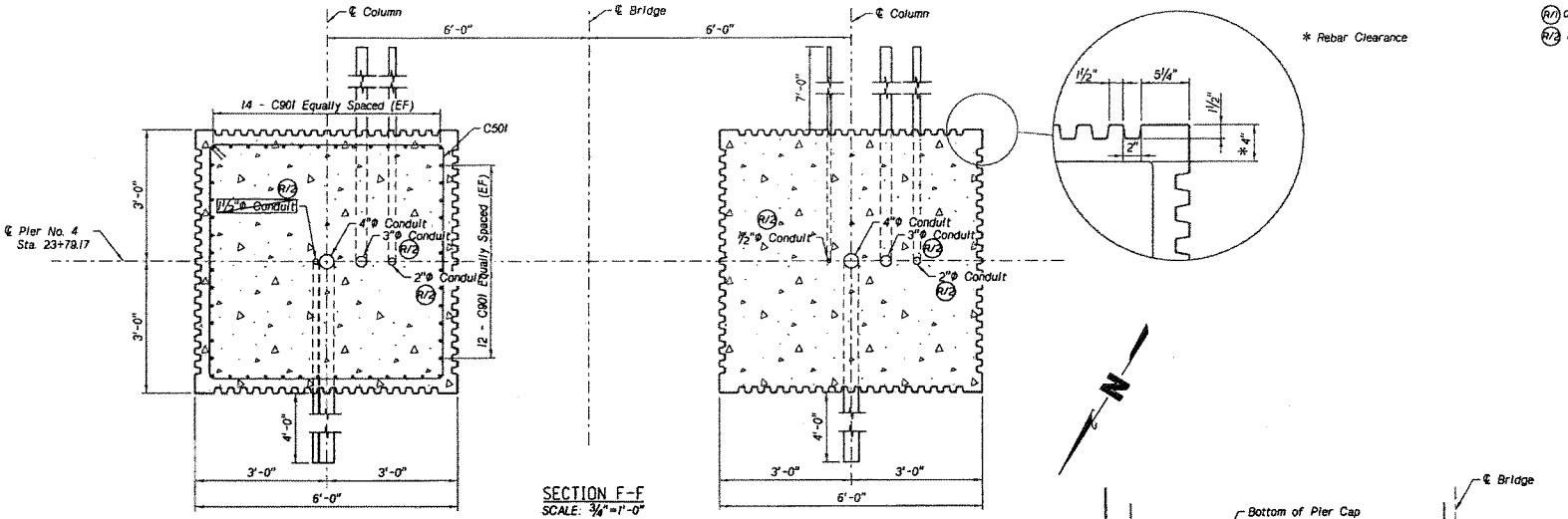

SECTION F-F
SCALE: ¾"=1'-0"

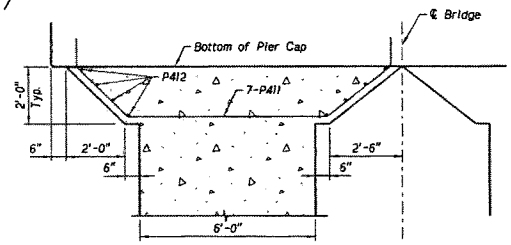

COLUMN TOP DETAIL
½" = 1'-0"

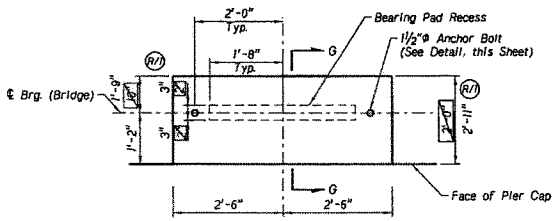

PEDESTAL DETAIL
¾" = 1'-0"

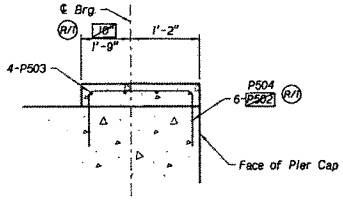

SECTION G-G
1" = 1'-0"

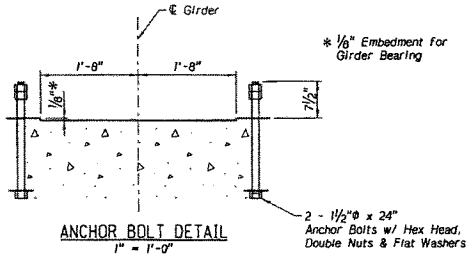

ANCHOR BOLT DETAIL
1" = 1'-0"

BRIDGE GIRDER PEDESTAL DETAILS

(R/1) 09/06/2012	JPA PROJECT NO. 870201A
(R/2) 10/11/2012	SHEET NO. 44

STRUCTURE NUMBER

LINCOLN Haymarket Infrastructure Team

PIER NO. 4
PEDESTRIAN BRIDGE / ARENA DECK SHARED PIER
PIER NO. 4 DETAILS

COUNTY LANCASTER
HWY. NO. NA
RBP. POST. NA
STA. 23+79.17
LOCATION HAYMARKET PED. BRIDGE OVER BNSF
SKEW 0°
ROADWAY 20'-0"
DESIGN LIVE LOAD AASHTO PED. W/H10
DETAILED BY GMW CHECKED BY SAH DATE AUGUST 2012
DESIGNED BY JBR

WEST HAYMARKET JOINT PUBLIC AGENCY

JOEL B. ROSSMAN E-8739 STATE OF NEBRASKA

SPECIAL PLAN NO. -1 -5/-6

OLSSON ASSOCIATES

This document was originally issued and sealed by Joel B. Rossman, E-8739, on 10-11-12. This media should not be considered a certified document.

118-A-41

EXHIBIT A OF CONTRACT AGREEMENT

BILL OF BARS - PIER NO. 4

	MARK	NO.	LENGTH	TYPE	"A"	"B"	"C"	"D"	"E"	"F"	"G"	PIN	HOOK	WEIGHT LB
FOOTING	P401	12	29'-6"	STR										236
	P601	34	41'-0"	108	3'-0"	14'-6"	3'-0"	2'-6"				4½"	8"	2094
	P602	15	29'-6"	STR										665
	P603	3	37'-2"	108	3'-0"	12'-7"	3'-0"	2'-6"				4½"	8"	167
	P604	1	33'-10"	108	3'-0"	10'-11"	3'-0"	2'-6"				4½"	8"	51
	P901	30	14'-6"	STR										1479
	P902	24	29'-6"	STR										2407
	P903	104	10'-9"	104	8'-9"	2'-0"						9½"		3801
													SUBTOTAL =	10,900 LB
COLUMNS	P411	14	14'-2"	134	6'-10	1'-9"	1'-0"	1'-9"	2'-2"	2'-6"	2'-10"	3"		132
	P412	16	5'-6"	STR										59
	P501	50	12'-3"	107	5'-8"	5'-8"						2½"	5½"	639
	P904	104	29'-6"	104	27'-6"	2'-0"						9½"		10431
													SUBTOTAL =	11,261 LB
PIER CAP	P402	4	29'-6"	STR										79
	P502	104	26'-4"	108	2'-9"	7'-8"	2'-9"	2'-0"				2½"		2856
	P801	10	28'-6"	103	1'-6"	25'-6"	1'-6"					6"		761
	P905	17	28'-10"	103	1'-8"	25'-6"	1'-8"					9½"		1557
													SUBTOTAL =	5,353 LB
PEDESTALS	P403	6	23'-6"	STR										94
	P404	4	12'-3"	STR										33
	P405	4	4'-3"	STR										11
	P406	6	9'-10"	STR										39
	P407	23	8'-0"	103	3'-5"	1'-2"	3'-5"					3"		123
	P408	16	11'-6"	103	5'-2"	1'-2"	5'-2"					3"		123
	P409	10	15'-4"	103	7'-1"	1'-2"	7'-1"					3"		102
	P410	21	8'-6"	103	3'-6"	1'-6"	3'-6"					3"		119
	P413	6	5'-0"	104	2'-6"	2'-6"						3"		20
	P503	12	4'-6"	STR										56
	P504	18	5'-11"	103	1'-9"	2'-5"	1'-9"					2½"		114
													SUBTOTAL =	814 LB
													TOTAL =	28,338 LB

NOTE For bending diagrams, hook lengths & pin diameters, see Sheet 36 of 36.

BAR MARK

(R/1) 09/06/2012

A413

- A = type of bridge element - A=Abutment (P=Pier, B=Bent, S=Slab, N=Barrier Rail)
- 4 = bar size
- 13 = bar number
  - 01 thru 49, general reinforcing
  - 70 thru 79, light pole reinforcing
  - 90 thru 99, curb or rail reinforcing

BAR SETS

MARK	MAX. LENGTH	MIN. LENGTH	NO. OF SETS	BARS PER SET

STANDARD HOOK LENGTH

PRIMARY STRESS BARS			STIRRUPS & TIES		
BAR SIZE	HOOK H 90°	HOOK H 180°	BAR SIZE	HOOK H 90°	HOOK H 135°
4	8"	6"	3	4"	4"
5	10"	7"	4	4½"	4½"
6	12"	8"	5	6"	5½"
7	15"	10"	6	12"	8"
8	17"	11"	7	14"	9"
9	19"	15"	8	16"	10½"
10	23"	17"			
11	24"	19"			

d = BAR SIZE
Dp = PIN DIAMETER

PIN DIAMETER

PRIMARY STRESS		STIRRUPS & TIES	
BAR SIZE	Dp	BAR SIZE	Dp
4	3"	3	1½"
5	3¾"	4	2"
6	4½"	5	2½"
7	5¼"	6	4½"
8	6"	7	5¼"
9	9½"	8	6"
10	11"		
11	12"		

DETAILING DIMENSION | HOOK H — d, Dp — 90°

DETAILING DIMENSION | HOOK H — d, Dp — 135°

DETAILING DIMENSION | HOOK H — d, Dp — 180°

BENDING DIAGRAMS

ALL DIMENSIONS ARE OUT TO OUT & NOT TO SCALE

ALL REINFORCING STEEL SHALL BE EPOXY COATED

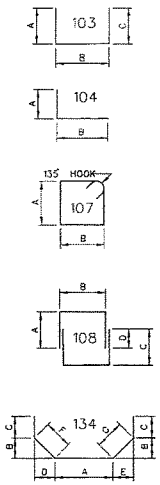

OLSSON ASSOCIATES

118-A-41

JPA PROJECT NO.	SHEET NO.
870201A	45

STRUCTURE NUMBER

LINCOLN Haymarket Infrastructure Team

WEST HAYMARKET

PIER NO. 4
PEDESTRIAN BRIDGE / ARENA DECK SHARED PIER
BILL OF BARS

DATE AUGUST, 2012

CHECKED BY SAH

DETAILED BY BMW

DESIGNED BY VBR

WEST HAYMARKET JOINT PUBLIC AGENCY

COUNTY LANCASTER
HWY. NO. NA
REF. POST. NA
STA. 23+78.17

LOCATION HAYMARKET PED. BRIDGE OVER BNSF
SKEW 0°
ROADWAY 20'-0"
DESIGN LIVE LOAD AASHTO PED. W/HO

PROFESSIONAL CIVIL ENGINEER JOEL B. ROSSMAN E-8739 STATE OF NEBRASKA

This document was originally issued and sealed by Joel B. Rossman, E-8739, on 9-6-12. This media should not be considered a certified document.

SPECIAL PLAN NO. 1 / 6

118-A-41

PROJ: $PROJECT$
PEN: $PENTBL$
USER: $$--USER--$$
DATE: $$--DATE--$$
DGN: $$--DESIGN-FILE-NAME--$$

EXHIBIT A OF CONTRACT AGREEMENT

LINCOLN
Haymarket Infrastructure Team©

Olsson Associates | Schemmer | Benesch | Clark Enersen
Farris Engineering | Sinclair Hille | Davis Design

MEETING MINUTES - PRE-BID
West Haymarket Joint Public Agency
Haymarket Infrastructure Improvement
Parking Lot, Festival Space & Pedestrian Bridge – Project 870201
Bid Number 12-291

DATE/TIME: November 14, 2012, 1:30 pm

LOCATION: Olsson Associates, 1111 Lincoln Mall, 2nd Floor East Arena Conference Room

I. Project Overview

a. Fencing and site access – *Access to the site will be across the west end of the 901 Maintenance lot. There is an existing gate at this location. There is a second entrance to the east of the 901 Building that can be used but is not suitable for larger trucks due to the tight turning radius. Contractor's need to limit the speed of all construction vehicles on the roadways around the 901 building and Haymarket Park. The Contractors shall not use 6th Street for access to the site.*

b. Initial Construction Area (Outside the 500' Levee Limit) – *Initial work on the project needs to be limited to the areas to the east of the 500' levee limit line shown on the plans. This would allow for work at the bridge, water main and the area where rough grading and embankment construction has already been completed under the Preliminary Grading Project.*

c. Bridge Construction – *A portion of the bridge construction will need to be completed within the limits of the arena construction site. Refer to the Special Provisions for requirements on safety training and other requirements for work within the Mortenson site. Also this work will need to be closely coordinated with Mortenson, the Core Area Contractor and the BNSF Railroad. No work can begin on BNSF property until all insurance submittals and the C-1 Agreement have been approved and executed by the BNSF. Work at Pier 3 can begin immediately since it is outside the limits of the BNSF ROW. However flagging may still be required by the BNSF for the Pier 3 construction if the crane boom can foul the tracks.*

d. Utility Construction – *The project includes water main construction, storm sewer and some sanitary sewer work associated with the sewer dumps for the festival uses. This will include construction of a 4-inch water meter/backflow enclosure and associated plumbing and yard hydrants. The water main construction will need to be phased as shown on the plans to allow the 901 facility to be used up to summer of 2013. The water main design has been set up to allow the first segment to be*

EXHIBIT A OF CONTRACT AGREEMENT

tested, disinfected, flushed and placed in service prior to completion of the entire main. There will also be work associated with reconstruction of sanitary sewer manholes due to the significant changes in grades. Refer to the plans and Special Provisions for notes/details on the manhole reconstruction.

e. Grading and Parking Lot Construction – *The embankment at the north approach to the bridge and eastern portion of the parking lot site has been rough graded. This project will complete the grading to the west and at the access drives into the site at the west and east ends. This project shall also include removal of the surcharge and placement of this material along the sides of the embankment to provide the finished slopes as shown. The Contractor shall also be required to perform some grading and at the existing rough graded area to prep the site for the paving. Some minor adjustments in the finished grades in the vicinity of the new electrical service panels and at the southwest corner of the MSE wall have been made as part of the final design for this project. A pay item for this grading work shall be added as part of a future addendum.*

f. Electrical and Lighting – *This project has a significant amount of lighting as shown on the plans. There will be a future addendum to add additional conduits from the electrical panel up to the north end of the bridge for the future bridge lighting to be installed by the Aesthetic Contractor. There will also be a significant amount of electrical work associated with the festival uses and this project will provide the 1600 amp main switchgear panel and the associated 100 amp, 200 amp and 400 amp company switches as shown on the plans.*

g. Maintenance of existing BMP's, installation of new BMP's and final site stabilization – *Upon completion of the grading project the BMP's installed under that contract and responsibility for erosion and sediment control/discharge from the site shall become the responsibility of the Contractor for this project. The Contractor shall familiarize themselves with the site and existing BMP's.*

h. Settlement plate monitoring - *The current project is installing settlement plates at the embankment to be used by the Geotechnical Engineer to determine when the surcharge can be removed. The monitoring of these settlement plates is being completed by others and the Contractor shall coordinate with the surveyors to provide them access to the plates throughout the course of the project. The plates are monitored on a weekly basis.*

i. Coordination with other Projects and adjacent 901 Facility – *There will need to be on-going coordination with the arena contractor as well as the Core Area contractor when working in the areas to the south of the tracks. There will be continual coordination with the BNSF and the staff at the 901 facility to ensure that their daily operations are not impacted by construction of the project. In addition there will need to be coordination with the landscape contractor and the bridge aesthetic contractor during the course of the project.*

j. Incentives/Disincentives – *Schedule is a critical factor for the West Haymarket Projects and for this project in particular. The arena cannot be used without the pedestrian bridge, parking and walkways in place so therefore this project needs to be completed on time or ahead of time. The JPA has added incentives to this project to encourage the contractor to complete the project as quickly as possible.*

k. Contractor Qualifications – *Due to the importance of this project the JPA is requesting that all bidders provide information on their qualifications for building the*

pedestrian bridge as well as the qualifications of their project manager. There are two separate forms that need to be completed and submitted with the bid proposals. The bids will be ranked based upon price to determine the lowest responsible bidders. The bidder's qualifications will then be reviewed to determine if the lowest responsive bidder has the qualifications and experience to complete the project.

l. Questions – *A question came up regarding allowing contractors to prequalify to verify that the JPA would accept them as a qualified bidder to complete the project. This is going to be reviewed and addressed in a future addendum.*

Bid Opening Date: 12:00pm, Wednesday, December 5, 2012 ***THIS DATE WILL NOT MOVE DUE OR THE PROJECT SCHEDULE WILL NOT BE MET***
Anticipated Notice to Proceed: Early NTP Monday, January 7, 2013
Davis Bacon Wages Apply - Highway

II. Discussion Topics

a. General Construction Work

i. Bridge construction, substantially completed by July 28, 2013 to allow aesthetic work to begin. Early completion June 28, 2013 for full incentives. Substantial Completion for overall project September 6, 2013 with early completion of August 7, 2013 to receive full incentives. Final completion October 25, 2013. *There was discussion on the incentives/disincentives. This will need to be clarified in an addendum. The Incentives apply to the Substantial Completion of the entire scope of work which would be the bridge, parking lot and pedestrian walkways. There will not be additional Incentives for completing the bridge prior to the July 28, 2013 date since there needs to be an allowance of 40 days for the aesthetic contractor to complete their work. The disincentives will apply to both the Substantial Completion date for the bridge which is July 28, 2013 and the overall project Substantial Completion date of September 6, 2013.*

ii. Three Phases outlined for the contract, Phase I includes bridge construction with work at constructing piers to begin immediately. Other Phase I work is a portion of the water main, grading and paving outside the 500' limit of the levee. Refer to Special Provisions for requirements for work at the BNSF ROW. *It was envisioned that the work on the bridge would begin immediately with work starting at Pier No. 3. PC Sports will be coordinating with Mortenson to verify that the site can be cleared to allow work at this pier to begin immediately upon receipt of an NTP. The bridge work would than most likely proceed north. A temporary crossing will be constructed by the BNSF to the west of the pedestrian bridge across the current tracks. The contractor will be required to construct the necessary access road up to the crossing on either side of the tracks. Temporary gates are shown on the plans to be installed at the temporary fences along the corridor at the access road. Phase I includes the initial water main work and will also allow any grading, demolition, prep work and paving at the parking lot area to the east of the 500' levee limit.*

iii. Phase II includes grading, storm sewer and paving work inside the 500' limit of the levee. This work cannot begin until final approval has been received

from the LPSNRD and the COE on work to be completed within the limits of the levee and final flood plain permit for this area has been issued by the City of Lincoln. *Phase II work can begin once approval has been obtained from the LPSNRD and the COE for work within the limits of the levee and once the floodplain permit has been issued for work in this area. This work can be completed concurrently with work on Phase I. LES will be relocating several poles and down guys at the 34.5 kV power line to accommodate the work on this phase. LES cannot begin their relocations until the necessary LPSNRD, COE and floodplain approvals are in place. The contractor shall coordinate their work with LES's work.*

iv. Phase III includes work associated with removal of the surcharge at the embankment, finish grading at the embankment and construction of walkways and bike path at the north approach to the bridge. This phase cannot begin until Geotechnical Engineer has determined settlement is complete. This phase cannot begin until 901 users have been relocated. This phase also includes final segment of water main. Note coordinate water main work on this segment with activities at Haymarket Park. *This phase can be completed concurrently with work on Phase I and II contingent upon the aforementioned requirements being met. It is anticipated that surcharge removal may begin sometime during June of 2013.*

v. Maintain access and fencing around the 901 building at all times. *Need to coordinate work at the site to maintain a permanent or temporary fence to secure the 901 yard at all times. Make sure all gates are closed and locked each day before leaving the site.*

vi. Maintain fence along BNSF right-of-entry line to prevent unauthorized entry into railroad property. *There is an existing temporary fence along the BNSF corridor, the contractor shall maintain this and add additional fence as shown on the plans or as directed by the Engineer to separate the construction site from the BNSF tracks.*

vii. New fence construction around the perimeter of the lot and all seeding outside the fence to be completed by the Contractor. Seeding and sodding inside the fence will generally be completed by the landscape contractor who will begin work at the end of August 2013. Contractor to coordinate final site work with landscape contractor.

viii. Coordinate construction of bridge work at the arena site with Mortenson Construction. Refer to Special Provisions for contractor safety requirements for work at the arena site.

ix. Parking lot and festival space construction. Paving, stage foundations, electrical work, lighting, modular retaining walls, pervious concrete paving, demolition at roundhouse foundations, grading. Amenities for festival use, electrical facilities, yard hydrants, sanitary sewer dumps and stage foundations and accessories. *The plans show different items to be constructed to support the use of this space for festivals. This includes foundations for a stage as well as the water, sewer and electrical facilities. The bidders shall familiarize themselves with the details shown on the plans for these items. It was noted that the water services will require construction of an enclosure for the water meter/backflow. The plans show a concrete*

block enclosure but the JPA will consider prefabricated enclosures that meet the requirements of LWS for access, are insulated and heated. Bidders who wish to use an alternate prefabricated structure are encouraged to submit details prior to bids being received so preliminary review and approval can be provided by the JPA through an addendum.

x. Discussion of the proposed bridge and construction sequencing. Temporary bent construction, pier construction, abutment construction (need to cut-off piles previously driven to proper elevation), and upcoming changes to the electrical conduits, the closure slab at Pier No. 4 and the deck drainage system at Pier No. 4. *A discussion of the construction sequencing for the bridge work was provided. It was noted that the bridge girders have a wider web and modified details for the end anchorage for the post tensioning. Contractor's shall review these details on the plans. It was also noted that there will be some additional details forthcoming in an addendum to cover work for construction of a closure slab and drainage system at Shared Pier 4. It was also clarified that the piling and CMP sleeves at the abutment will need to be cut-off to the elevations shown on the plans and that this work was subsidiary to the bridge construction.*

b. Status of Utilities

i. LES, relocation of several poles and down guys for 34.5 kV line along the 3rd Street corridor along the west side of the project. These relocations may need to be completed concurrently with work on Phase II since LES cannot begin work until the LPSNRD and COE have provide their approval for work within the limits of the levee. *The JPA is coordinating with LES to see that this work can begin as soon as approval is received. The Contractor needs to take into consideration that LES may need to complete this work concurrently with their work on Phase II.*

ii. There will be work associated with relocation of existing LES conduits and City of Lincoln Fiber conduits along the west side of the project. This work is included with the project.

iii. There are existing BNSF, Qwest and Verizon cables along the BNSF corridor, make sure these are located before beginning work on the bridge piers. There area also buried BNSF electrical lines adjacent to the temporary bent. This line will be approximately 3 to 4 feet outside the bent piles and will need to be located prior to start of any work at the temporary bent. *It was stated that the BNSF cables and other fiber lines will need to be potholed and located prior to any construction within the BNSF ROW including Pier No. 1 and the temporary bent.*

iv. The proposed amenities for the festival area will include construction of sanitary sewer services as shown on the plans.

v. There will be water main construction as shown on the plans. This will need to be completed in phases to avoid impacts to the 901 facilities prior to their relocation. *It was noted that all work associated with the construction of the service lines to the yard hydrants will need to be completed under the supervision of a licensed plumber since these are water services outside the main.*

c. Coordination with Others
   i. Preliminary Grading Contractor – Work to be substantially complete by December 20, 2012.
   ii. Arena Contractor
   iii. Bridge Aesthetic Contractor (not selected at this time)
   iv. Landscaping Contractor (not selected at this time)
   v. City 901 Building Staff
   vi. Core Area Contractor
   vii. Haymarket Park users

d. BNSF Railway Special Provisions and requirements – *A question was asked regarding the flagging and the days versus the total cost. It was stated that the aggressive schedule for this project will require construction and flagging that extends 12 hours or more per day and that the assumed $1,000 per day flagging cost is low. This will be reviewed and addressed as part of a future addendum.*

e. Environmental Requirements
   i. Environmental Contingency Plan – *Contractors shall familiarize themselves with the environmental protocols in the event potential contaminated or hazardous material is encountered. These need to be strictly adhered to.*
   ii. Dewatering Requirements – *No water can be pumped from the excavations and discharged without first being tested by the WH Environmental Team. Provisions are in the contract for containers to hold the water for testing. Based upon previous projects all water has been discharged into the sanitary sewers and the rate of discharge into the sewer needs to be controlled as required by LWWS.*
   iii. Other Environmental Discussion/Requirements

f. Earthwork/Geotechnical Requirements
   i. Construction requirements – *The geotechnical report contains the requirements for borrow and compaction that needs to be followed for the grading and pavement subgrade preparation.*
   ii. Subgrade stabilization at lower areas and at trenches – will add quantities to the project through future addendum for stabilization rock and geogrid. *It was noted that a pay item for crushed rock (or crushed concrete) stabilization and geogrid will be added as part of a future addendum in the event it is needed in the lower graded portions of the lot located to the south and west.*

g. Allowable substitutions
   i. Modular walls – Rockwell Classic Colonial Blocks are approved for use
   ii. Alternate for pervious pavement – *It was stated that the Filter Pave alternate was not acceptable for use in lieu of the Pervious Concrete.*

h. Upcoming Addendum Items
   i. Changes to electrical conduits to provide power to future bridge lights from parking lot/festival area electrical panel
   ii. Closure slab and drainage at Pier No. 4.

iii. Conduits across the bridge.

i. Questions or Other Discussion Items

1. There was a question regarding the dewatering special provisions stating that structures will be paid for as the depth of the structure times three. This would apply to a linear utility where you would have a manhole or other structure and would not apply to the bridge or stage foundations. Dewatering at the bridge footings or stage foundations or other stand alone structures would be paid for by the calendar day as noted in the Special Provisions.
2. There was a question about whether the BNSF safety training and e-rail safe requirements are needed for all workers. These requirements apply to any of the employees who will need to work within the BNSSF right-of-entry areas. This would include the water main work for the new 4-inch service line, fencing, some grading, some storm sewer work, final seeding and the bridge construction.
3. There was a question regarding the levee special provision and the requirement for cohesive material but not equipment. The Contractor will be required to have both cohesive material and equipment on-site at all times when completing excavations in this area to allow for the excavations to be backfilled in the event flooding along Salt Creek is predicted.

LINCOLN
Haymarket Infrastructure Team®

Olsson Associates | Schemmer | Benesch | Clark Enersen
Farris Engineering | Sinclair Hille | Davis Design

Pre-bid Meeting Sign In, November 12, 2012, 1:30 PM, Olsson Associates
Haymarket Infrastructure Improvement
Parking Lot, Festival Space & Pedestrian Bridge – Project 870201
Bid Number 12-291

NAME	ORGANIZATION	PHONE/E-MAIL
Dave Sandquist	United Contractors Inc	515-979-6081 davesandquist@ unitedcontractors.net
Josh Evans	OA	402-430-0893 jevans@oaconsulting.com
Joel Rossman	OA	402-938-2428 jrossman@olssonassociates.com
Craig Beebe	Sampson Construction	402-431-5403 craig.beebe@sampson-construction.com
Matt Firestone	CECM	402.474.1341 mfirestone@commonwealthelectric.com
Micah Edson	CECM	402 416 0202 medson@commonwealthelectric.com
Kurt Gregory	Hawkins	402-618-9180 kgregory@hawkins1.com
Tom Crockett	Hawkins	402-221-7637 tcrockett@hawkins2.com
Nick Gaeder	Hawkins	402-221-7629 ngaeder@hawkins1.com
Tom Thomssen	Benesch	402 560-1833 tthomssen@benesch.com
Tina Barker	City of Lincoln Solid Waste Op	402-405-5577 tbarker@lincoln.ne.gov

EXHIBIT A OF CONTRACT AGREEMENT

EXHIBIT A OF CONTRACT AGREEMENT

LINCOLN
Haymarket Infrastructure Team©

Olsson Associates | Schemmer | Benesch | Clark Enersen
Farris Engineering | Sinclair Hille | Davis Design

NAME	ORGANIZATION	PHONE/E-MAIL
JAYMES KRALICEK	HAUSMANN CONSTRUCTION	402-326-7109 JAYMESK@HAUSMANNCONSTRUCTION.COM
Matt Miller	Hausmann Construction	402 438 3230 MattM@hausmannconstruction.com
Steve Ragoss	TCW Construction, Inc.	(402)475-5030 sragoss@tcwconstruction.com
JOE DELGADO	TCW CONSTRUCTION INC.	475-5030 JDELGADO@TCWCONSTRUCTION.COM
Jason Muhle	CCI	450-1732 jason@ccibusiness.com
Casey Thompson	CCI	432-7528 casey@ccibusiness.com
Todd Paustian	CCI	450-7973 todd@CCIBusiness.com
BRIAN CLAYCOMB	OA	402-932-2632 bclaycombe@olssonassociates.com
DEREK BOOKSTROM	HR BOOKSTROM	402-464-4342 derek@hrbookstrom.com
Brian Egr	Graham	402-490-9025 brane@grahamus.com
Karen Nalow	TLEP	402-477-9291 karen.nalow@clarkenersen.com
Gary Varley	Land	402-477-5263 garyelandconstruction.com
John R. Judds	JBCC	(402) 467-4666 jjudds@juddsbros.com
Steve Samuelson	Constructors	434-1764 steves@constructorslincoln.com
John Whitmer	ABC Electric	435-3514 johnw@abcelectric.net
Robert Cramer	Cramer + Assoc Inc	515-265-1447 rcramer@cramerandassociatesinc.com

LINCOLN
Haymarket Infrastructure Team©

Olsson Associates | Schemmer | Benesch | Clark Enersen
Farris Engineering | Sinclair Hille | Davis Design

EXHIBIT A OF CONTRACT AGREEMENT

NAME	ORGANIZATION	PHONE/E-MAIL
Amgad F Morgan Girgis	econstruct USA LLC	402 3128172 / agirgis@econstruct.us
Dennis Drews	Coreslab Structures	402-291-0733 / ddrews@coreslab.com.
Caleb Swanson	PC Sports	402-477-0487 / caleb@projectcontrol.com
Maher K Tadros	econstruct USA LLC	402 215 1430 / mtadros@econstruct.us

EXHIBIT A OF CONTRACT AGREEMENT

LINCOLN
Haymarket Infrastructure Team©

Olsson Associates | Schemmer | Benesch | Clark Enersen
Farris Engineering | Sinclair Hille | Davis Design

NAME	ORGANIZATION	PHONE/E-MAIL

West Haymarket Infrastructure Team
1111 Lincoln Mall | Suite 111
Lincoln, NE | 68508

ADDENDUM NO. 3

WEST HAYMARKET JOINT PUBLIC AGENCY
HAYMARKET INFRASTRUCTURE IMPROVEMENT
PARKING LOT, FESTIVAL SPACE & PEDESTRIAN BRIDGE
PROJECT NO. 870201
BID NO. 12-291

Addenda are instruments issued by the Purchasing Office prior to the date or time for receipt of offers which will modify or interpret the specifications document by addition, deletion, clarification or correction.

Please acknowledge receipt of this addendum in the space provided in the Attribute Section.

Please be advised of the following changes and clarifications to the City's specification and bidding documents:

1. Refer to the Notice to Bidders and modify as follows:

   "Sealed bids will be received by the Purchasing Agent of the City of Lincoln/Lancaster County, Nebraska **BY ELECTRONIC BID PROCESS** until: **2:30 pm, Wednesday, December 5, 2012** for providing the following:

   Haymarket Improvement, Parking Lot,
   Festival Space and Pedestrian Bridge Project
   Project 870201
   Bid No. 12-291

2. Refer to the Bid Form and the Summary of Quantities, Sheets 2 through 5 in the plans. The following bid items have been added:

50.00001	Chain Link Fence Cantilevered Gate, 22'-0" Wide	2 Each
50.00005	PVC Storm Sewer, 8"	5 Lin. Ft.

   The following bid items have been deleted:

50.00001	*Chain Link Fence Cantilevered Gate, 44'-0" Wide	1 Each

   *Deleted Item replaced with two 22'-0" Wide Cantilevered Gates

   The following bid quantities have been revised to reflect the quantities as shown below:

04.09106	PCC Pavt w/Int Curb, 6"	33,584 Sq. Yd.
04.09108	PCC Pavt w/Int Curb, 8"	16,777 Sq. Yd.
04.09505	Conc Bikeway, 5"	38,854 Sq. Ft.

This document was originally approved and sealed on November 28, 2012 by Thomas A. Leikam, a licensed professional engineer in the State of Nebraska E-6290. This media should not be considered a certified document.

21.03318	RCP Storm Sewer, Cl III, 18"	478 Lin. Ft.
21.08011	Grate Inlet, Ty "F-1"	5 Each
21.12218	RC FES, 18"	2 Each
24.03240	Conduit, 4", Trenched	2,918 Lin. Ft
24.12100	Cable, Tracer Wire	4,351 Lin. Ft
50.00001	Chain Link Fence Walk Gate, 6'-0" W, 96" H	1 Each
50.00005	PVC Storm Sewer, 12"	430 Lin. Ft.
50.00005	2" Conduit in Bridge	1,172.33 Lin. Ft.
50.00005	3" Conduit in Bridge	1,390.33 Lin. Ft.
50.00005	4" Conduit in Bridge	1,372.00 Lin. Ft.
50.00045	Scour Stop	48 Sq. Ft.

3. Refer to Addendum No. 2, Contractors Prequalification.

   The following Contractor's have submitted the required qualifications forms for review prior to the bids opening. The JPA has reviewed the Contractors qualifications that were submitted and have approved the following Contractors as being prequalified to complete the bridge construction work as outlined for this project:

   Cramer & Associates
   Hawkins Construction
   Commercial Construction Inc.

4. Refer to the Special Provisions. Add the following Special Provision for Submittal of Subcontractor Information:

   SUBMITTAL OF SUBCONTRACTOR INFORMATION

   Following the opening of the bids, the JPA will notify the apparent low bidder, along with any other bidders as determined by the JPA, to request information on the subcontractors to be used in the completion of the project. The requested bidders shall provide a listing of the proposed subcontractors to be used for completion of the following items or shall identify that the work is to be completed by the contractors own forces:

   - Bridge construction
   - Post-tensioning work associated with the bridge construction
   - Pavement, sidewalk and bike path construction
   - Water main and sanitary sewer construction
   - Storm Sewer
   - Earthwork and grading
   - Lighting and electrical work

   The bidders shall provide this information to the Purchasing Agent no later than 4:00 pm on December 6, 2012.

This document was originally approved and sealed on November 28, 2012 by Thomas A. Leikam, a licensed professional engineer in the State of Nebraska E-6290. This media should not be considered a certified document.

5. Refer to the Special Provisions, Page 33, Chain Link Fence Requirements.

Add the following sentence to the beginning of the second paragraph from the top:

> "If specified on the plans, barbed wire shall be installed along the top of the chain link fence."

Delete the fourth paragraph from the top and replace with the following:

> "Terminal, end, corner and pull posts shall be set a minimum of 36 inches below grade in 18 inch diameter concrete footings by 42" depth."

Delete the first paragraph following the "Installation" sub-heading and replace with the following:

> "The permanent Galvanized Chain Link Fence along the north side of the BNSF Corridor shall be 8-foot high, 9 gauge industrial chain link fence. Barbed wire shall not be used for any of the fencing along the north side of the BNSF corridor or at other locations unless specified on the plans."

6. Refer to the Special Provisions, Page 35, Chain Link Construction Fence.

Delete the Special Provision and replace with the following:

CHAIN LINK CONSTRUCTION FENCE

The work covered by this section shall consist of furnishing all labor, equipment, tools, materials and incidentals necessary to construct a minimum 6-foot high chain link construction fence at the locations shown on the plans or as directed by the Engineer. Chain link construction fence built as part of this project shall comply with the requirements outlined in Chapter 8 of the City of Lincoln Standard Specifications for Municipal Construction for all material and installation. Used fence material that meets the requirements outlined in Chapter 8 and which is in good condition as determined by the Engineer, may be used for the temporary construction fence. Horizontal splicing of fence fabric to obtain the minimum 6-foot height will not be allowed.

For construction of the temporary fence the line and terminal posts shall be driven into the ground and permanent concrete footings are not required. A top rail is required and nine-gauge tension wire shall be installed at the bottom of the fence to support the fabric. The tension wires at the bottom of the fabric shall be installed with hog ring clips at maximum 2-foot spacing. The fence shall be maintained by the Contractor throughout the duration of the construction in a satisfactorily manner as directed by the Engineer.

This document was originally approved and sealed on November 28, 2012 by Thomas A. Leikam, a licensed professional engineer in the State of Nebraska E-6290. This media should not be considered a certified document.

The temporary fence shall be placed at the start of the project work to prevent unauthorized entry into the railroad property or other adjacent properties. The temporary fence shall extend to the limits shown on the plans or as directed by the Engineer.

Temporary chain link construction fence may also be installed around the construction area at other locations not specifically identified on the plans as directed by the Engineer. Chain link construction fence that is installed at the direction of the Engineer shall be paid for directly in accordance with the contract unit bid price.

Measurement and payment shall be made at the contract unit price bid per linear foot for the pay item "Chain Construction Link Fence". Said payment shall include furnishing all labor, equipment, materials and incidentals required to install the fence including removal and disposal of the fencing at the completion of the project following installation of the permanent site fencing.

7. Refer to the Special Provisions, Page 63, 2-Inch and 3-Inch Conduit in Bridge.

   Delete the first paragraph under the sub-heading "Material Requirements" and replace with the following paragraphs:

   "Junction boxes for use in the bridge conduit systems shall be the dimensions shown on the plans and shall be NEMA type 4 watertight and dust-tight construction. Boxes to be cast in concrete shall be of machine able quality gray iron castings, outside flange with recessed cover and designed specifically for flush mount in vertical cast-in-place concrete surfaces. The junction boxes to be cast in the rails shall be partitioned to separate the power wiring and control wiring in accordance with NEC requirements. The partition shall be of galvanized steel or other corrosion resistant material and shall be securely attached to the junction box. Cover and box shall have a hot-dip galvanized finish. Cover shall be gasket and secured to the box with hex head stainless steel screws. Conduit entrances into the box shall be through slip holes. Fasten conduit to box using sealing type locknuts. Junction boxes to be cast into the concrete shall be O-Z Gedney YR series, Spring City ER series or Crouse Hinds WJBF series.

   The junction boxes to be surface mounted to the concrete walls at Pier No. 4 shall be NEMA type 4 watertight and dust tight-construction. The surface mounted junction boxes shall meet all requirements outlined for the junction boxes to be cast into the rails with partitions required to separate the power and control wiring. Acceptable manufacturers for the surface mount junction boxes shall be O-Z Gedney, Spring City or Crouse Hinds."

This document was originally approved and sealed on November 28, 2012 by Thomas A. Leikam, a licensed professional engineer in the State of Nebraska E-6290. This media should not be considered a certified document.

8. Refer to the Special Provisions, Page 64 - 65, 4-Inch Conduit in Bridge.

Delete the first paragraph under the sub-heading "Material Requirements" and replace with the following paragraphs:

"All fiberglass conduit and fittings shall have a temperature range of -60 degrees F to + 250 degrees F. The conduit shall be designed for aboveground installation and GRAY in color on the structure and shall be design for underground installation north of Abutment No. 1 to the Fiberglass Vault located off the north end of the bridge as shown on the plans. The wall thickness should be extra heavy wall to provide the highest level of physical protection."

Add the following paragraph to the end of the subsection "Material Requirements":

"Junction boxes for use in the bridge conduit systems shall be the dimensions shown on the plans and shall be NEMA type 4 watertight and dust-tight construction. Boxes shall be of machine able quality gray iron castings and designed to be surface mounted on a vertical cast-in-place concrete surface. Cover and box shall have a hot-dip galvanized finish. Cover shall be gasket and secured to the box with hex head stainless steel screws. Conduit entrances into the box shall be through slip holes. Fasten conduit to box using sealing type locknuts. Acceptable manufacturers for the surface mount junction boxes shall be O-Z Gedney, Spring City or Crouse Hinds."

Delete the second paragraph on page 64 under the sub-heading "Construction Methods" and replace with the following:

"The conduit hanger support system shall have a maximum spacing of twelve (10) feet between hangers or as required to avoid a mid-span deflection exceeding 5/8 inches."

9. Refer to the Special Provisions, Page 82, Area Lighting Units.

Add the following paragraph to the end of this section:

"The JPA has received requests for substitutions for the LED fixtures for Lighting Units B, C, D, D1, F, G, and G1. The following lighting fixtures have been reviewed in accordance with the Project documents, and have been determined to be equivalent items to the fixture specified in the original bid documents subject to any additional requirements as specified below for the approved fixture. All fixtures, lamps, and drivers are required to meet the specification requirements outlined in the Special Provisions and City of Lincoln Standard Specifications as well as the requirements shown on the plans regardless of prior approval.

This document was originally approved and sealed on November 28, 2012 by Thomas A. Leikam, a licensed professional engineer in the State of Nebraska E-6290. This media should not be considered a certified document.

Type	Manufacturer and Catalog Number	
B, C, D, D1, F, G, G1	Cooper	GLEON-AA-03-LED-E1-T3/T4-AP-EA-TH*

*Fixture driver load exceeds that of the specified driver. The contractor shall submit calculations for voltage drops on the lighting circuiting as part of the shop plan submittal process to verify that the additional driver load does not require an increase in wire size. Any increases in wire size or conduit size that is required due to the additional driver load shall not be cause for additional compensation and all costs associated with the increase in wire or conduit size shall be subsidiary to the cost of the substitute fixture."

10. Refer to the Special Provisions, Page 82, Area Lighting Units.

    Add the following paragraph to the end of this section:

    "The parking area light poles and fixtures specified are to be finished with an electrostatically applied thermally cured TGIC polyester powdercoat finish."

11. Refer to the plans, Sheet 15, Curb Drop and Flume Details.

    For the Type I Curb Drop & Flume change the note for the scour stop apron to read as follows:

    "4' x 8' Scour Stop Apron Armor to be furnished and installed by Others as part of the Landscape Project".

12. Refer to the plans, Sheet 16, Stage Foundation Layout.

    Delete the sheet and replace with the attached sheet "Stage Foundation Layout, Addendum #3".

13. Refer to the plans, Sheet 20, Details.

    Add the attached sketch that shows details for a cast-in-place concrete curb inlet.

14. Refer to the plans, Detail Sheets.

    Add the attached three (3) plan sheets 20A, 20B and 20C that show line diagrams for the layout of the 2-inch, 3-inch and 4-inch conduits on the bridge along with associated details for the conduit installation.

This document was originally approved and sealed on November 28, 2012 by Thomas A. Leikam, a licensed professional engineer in the State of Nebraska E-6290. This media should not be considered a certified document.

15. Refer to the plans, Sheet 73, Construction and Removal.

    Revise the PCC Pavement Build Note as follows:

    Sta. 112+50.00 – Sta. 117+80.51, Lt & Rt; 8" Paving; 8,275 SY
    Sta. 112+56.40 – Sta. 117+80.51, Lt & Rt; 6" Paving; 1,850 SY

16. Refer to the plans, Sheet 76, Construction.

    Revise the PCC Pavement Build Note as follows:

    Sta. 122+84.00 – Sta. 127+58.59, Lt & Rt; 8" Paving; 2,084 SY

17. Refer to the plans, Sheet 77, Fencing.

    Revise the build tab for "Chain Link Fence Cantilevered Gate, 44'-0" Wide" to "Chain Link Fence Cantilevered Gate, 22'-0" Wide" and increase the quantity from 1 to 2 each.

    Revise the leader note on the plans pointing to the gate to read "Sta. 106+89.77 CL, 2 – 22'-0" Cantilevered Gates.

18. Refer to the plans, Sheet 109, Electrical One-Line Diagram & Schedules.

    Add the following Note 9 to the One-Line Diagram notes:

    Refer to the revised electrical sketch included with Addendum No. 2 that shows the bridge lighting conduits routed to the pedestrian bridge from Panel "LSE". In addition to the bridge lighting conduit shown, provide two (2) 2" spare conduits from Panel "LSE" to 5'-0" outside the concrete pad (spare conduits subsidiary to the panel).

19. Refer to the plans, Sheet 110, Electrical Panel Schedules.

    Refer to Panel "LSE"; Add three (3) 40A/2P breakers (breakers subsidiary to the panel).

20. Refer to the plans, Sheet 112, Site Lighting General Notes & Quantities.

    Add the following note to this plan sheet:

    The JPA has received requests for substitutions for the LED fixtures for Lighting Units B, C, D, D1, F, G, and G1. The following lighting fixtures have been reviewed in accordance with the Project documents, and are approved as equivalent items to the fixture specified in the original bid documents subject to any additional requirements as specified below for the approved fixture. All fixtures, lamps, and drivers are required to meet the specification requirements outlined in the Special Provisions and City of

This document was originally approved and sealed on November 28, 2012 by Thomas A. Leikam, a licensed professional engineer in the State of Nebraska E-6290. This media should not be considered a certified document.

Lincoln Standard Specifications as well as the requirements shown on the plans regardless of prior approval.

Type	Manufacturer and Catalog Number
B, C, D, D1, F, G, G1	Cooper GLEON-AA-03-LED-E1-T3/T4-AP-EA-TH*

*Fixture driver load exceeds that of the specified driver. The contractor shall submit calculations for voltage drops on the lighting circuiting as part of the shop plan submittal process to verify that the additional driver load does not require an increase in wire size. Any increases in wire size or conduit size required due to the additional driver load shall not be cause for additional compensation and all costs associated with the increase in wire or conduit size shall be subsidiary to the cost of the substitute fixture.

21. Refer to the plans, Sheet 112, Site Lighting General Notes & Quantities.

    Add the following note to this plan sheet:

    Refer to the Lighting Relay Panel Schedule, Sheet E12. Hubbell Building Automation CX Series relay panels have been reviewed in accordance with Project documents, and are included in the Contract Documents for bidding purposes. All relays, enclosures and components are required to meet the specification requirements regardless of prior approval. Prior approval does not waive any requirements indicated on the drawings or the special provisions.

22. Refer to the plans, Sheet 125, Communication Conduits.

    Revise the length of the 4" trenched conduit and tracer wire from 635' to 643' to account for the change in fiber vault location at the north end of the bridge.

23. Refer to the plans, Sheet 126, Communication Conduits.

    Change the location of Fiber Vault 5 to Sta. 17+26.00m 12' Lt.

24. Refer to the attached questions by the perspective bidders and the responses.

Dated this 28th day of November 2012.

This document was originally approved and sealed on November 28, 2012 by Thomas A. Leikam, a licensed professional engineer in the State of Nebraska E-6290. This media should not be considered a certified document.

QUESTIONS/REPONSES
Addendum No. 3
November 28, 2012

1. Sheet 111: Valmont DS330 poles shown says the finish needs to match the light poles. Is there a paint specification that tells us what process we need to use? Are the poles powder coated or wet coated or possibly even finish painted over galvanized surface?

   Response: Addendum No. 3 specifies the required finish for the light poles as an electrostatically applied thermally cured TGIC polyester powdercoat finish.

2. Bid Item #132 Chain Link Fence Cantilevered Gate, 44' Wide and #137 Chain Link Fence Walk Gate, 6', 96" height do not have a quantity.

   Response: Addendum No. 3 addresses this question. Item No.132 has been revised to Cantilevered Gate, 22' Wide and the quantity is 2 each. The quantity for the walk gate is 1 each.

3. Special Provisions Page 65 says: The communication conduit system will be measured for payment by the number of feet shown in the plans within the limits defined for the system. All 4" conduit, fittings, expansion fittings, bolts, anchor bolt assemblies, hanger assemblies, inserts, sleeves and other incidental items shall not be paid for directly but shall be considered subsidiary to the pay item 4 Conduit in Bridge. There isn't a page in the plans that show the 4" Conduit System. The same question applies to the 3-inch and 2-inch conduit systems. In addition there are two 2" conduits from the bridge junction boxes up to the top of the rail at each portal, will these conduits be paid for by the lineal foot under Item 205 – 2" Conduit in Bridge.

   Response: Addendum No. 3 includes a sketch for the 4" Conduit system at the bridge as well as the 3" conduit system and the 2" conduit system at the bridge. The 2" conduits from the junction box up to the top of the rail are included in the pay quantity for the 2" conduit as shown on the sketch. A quantity of 7'-0" has been added for the 2-2-inch conduits at each junction box at the portals.

4. In the temp fence specification it is state in one area that top tension wire is required and in another area that top rail is required. Please clarify which is required.

   Response: A top rail is required and this is clarified in Addendum No. 3.

5. Can used fence materials be utilized for tem fence materials? Are temp fence materials to meet the same requirements of the City of Lincoln Standard Specifications Chapter 8 for Chain Link Fence?

This document was originally approved and sealed on November 28, 2012 by Thomas A. Leikam, a licensed professional engineer in the State of Nebraska E-6290. This media should not be considered a certified document.

Response: Refer to Addendum No. 3. Used fence material in good condition as determined by the engineer can be used. All fence material and installation for the temporary construction fence shall be in accordance with the requirements of the Chapter 8 of the City Standard Specification for Municipal Construction.

6. In the plans and in the "Temporary Fencing" area of the specifications it is stated that both the existing temp fence and the temp fence installed as part of this project are to be removed at the end of this project and become property of the contractor. In the "Chain Link Construction Fence" area of the specifications it states that the chain link construction fence built along the right of entry line at the BNSF property shall remain in place at the end of this project and will be removed by others under a future project. Please clarify whether the fence will remain in place or be removed and become property of the contractor.

   Response: This is clarified in Addendum No. 3. All temporary chain link construction fence shall be removed at the end of this project once the permanent fence is installed.

7. There is a bid item for a 44' cantilevered gate. Industry standard is to construct cantilever gates for an opening no wider than 40'. The recommended option in this situation would be to provide two cantilever gates, one on either side of the opening, that meet in the middle. In this situation it would be two 22' cantilever gates in lieu of the 44' gate. Please advise whether this installation would be allowed.

   Response: This has been revised to show two 22' cantilevered gates as part of Addendum No. 3.

8. In the "Chain Link Fence Requirements – Chain Link Fence" section of the specifications it requires 6 strands of barbed wire on V-shaped arms to be installed at the top of the fence. In the "Chain Link Fence Requirements – Installation" section of the specification it states that barbed wire is not to be used at the permanent fencing. Please clarify whether barbed wire will be required on the 72" and 96" chain link fence.

   Response: Barbed wire is not required, this has been clarified as part of Addendum No. 3.

9. Plan sheet 79 shows a requirement of footings at corner, end or pull posts to be 18" diameter x 42" deep. The "Chain Link Fence Requirements' section of the specifications states footing size for terminal, end, corner and pull posts to be set in 12" dia. X 39" deep footings (industry standard). Please advise which footing size is allowed.

   Response: The footing at the corner, end or pull posts shall be 18" diameter x 42" deep. This has been clarified as part of Addendum No. 3.

10. Several lighting fixtures and a lighting relay panel have been submitted for review and approval as substitutions for the fixtures shown on the plans and specified in the original bid documents.

This document was originally approved and sealed on November 28, 2012 by Thomas A. Leikam, a licensed professional engineer in the State of Nebraska E-6290. This media should not be considered a certified document.

Response: Addendum No. 3 identifies which substitute items have been approved as equals. All other submitted substitute lighting items that are not shown as being preapproved in Addendum No. 3 are not approved for use on this project.

This document was originally approved and sealed on November 28, 2012 by Thomas A. Leikam, a licensed professional engineer in the State of Nebraska E-6290. This media should not be considered a certified document.

LINCOLN Haymarket Infrastructure Team	WEST HAYMARKET	PROJECT NO. 870201	SHEET NO. 21A
		Date: 11/28/2012	Drawn: JJW
		NOT TO SCALE	Checked: DLC
			Approved: TAL

117-E-97

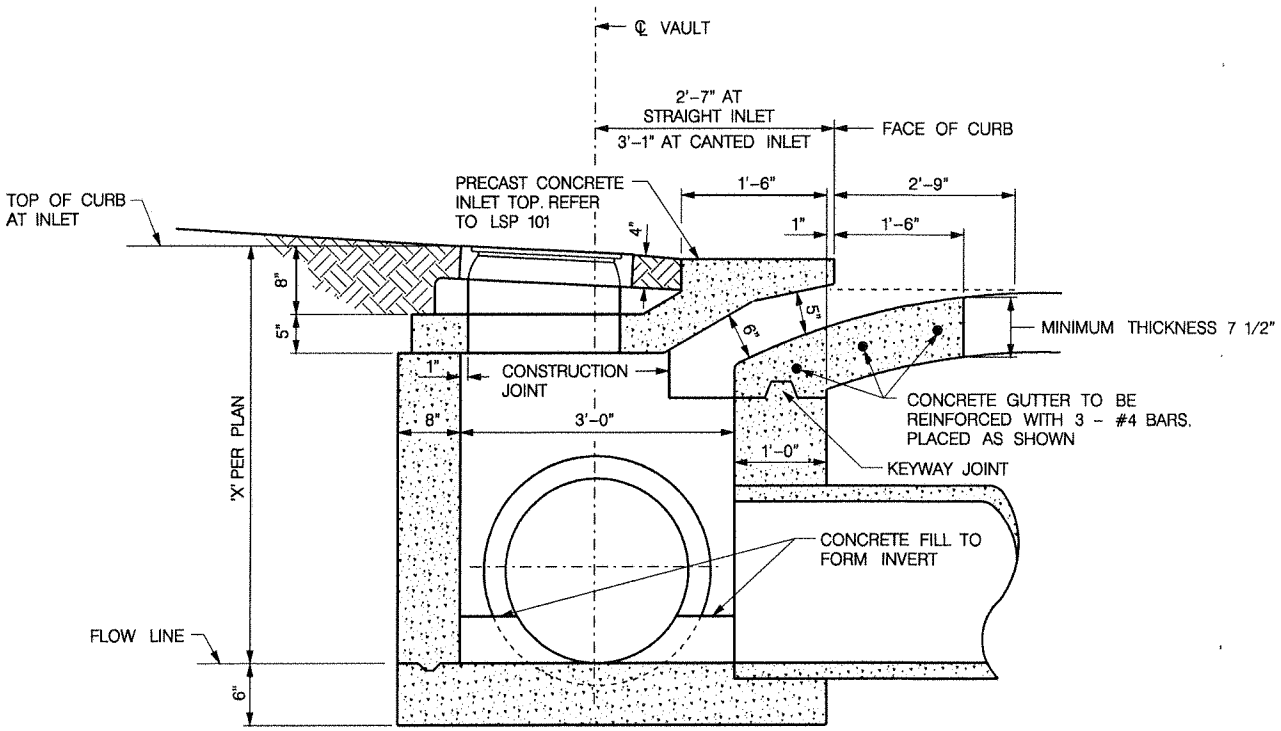

MIN. X = 22" PLUS PIPE DIAMETER PLUS PIPE WALL THICKNESS

SECTION OF CAST-IN-PLACE STORM DRAINAGE INLET, ALTERNATE FOR TYPE 'A-2' BRICK INLET

APPROX. QUANTITIES FOR DRAINAGE INLETS		
	L = 72"	
"X" DEPTH IN FT.	CONC. CU. YDS.	REINF. STEEL LBS.
3.3	2.96	101
4.0	3.38	101
5.0	3.98	101
6.0	4.58	101
7.0	5.18	101
8.0	5.78	101
9.0	6.38	101
ADD 0.1	0.06	0
TABLE DOES NOT INCLUDE DEDUCTION FOR PIPE OPENINGS		

PROJ: Parking Lot & Ped Bridge
PEN: BW_Pentable
USER: jwegner
DATE: 11/28/2012
DGN: F:\PROJECTS\010-2431\Design\Sheets_Parking_Ped_Bridge\Details\Addendum3_Inlet Detail.dgn

This document was originally approved and sealed on November 28, 2012 by Thomas A. Leikam, a licensed professional engineer in the State of Nebraska E-6290. This media should not be considered a certified document.

SKETCH "A"
PROJECT NO. 870201, ADDENDUM NO. 3
EXHIBIT A OF CONTRACT AGREEMENT

117-E-97

117-E-97

PROJ: Parking Lot & Ped Bridge
FILE: BM_Parmele
USER: Mark Hoover
DATE: 11/28/2012
DGN: P:\PROJECTS\870-249\Design\Sheets_Parking_Ped_Bridge\Details\870D7_A3.dgn

PROJECT NO.	SHEET NO.
870201	16

Date: 11/28/2012 Horz. Scale 1: Drawn: Checked: Approved:

LINCOLN Haymarket Infrastructure Tasks — WEST HAYMARKET

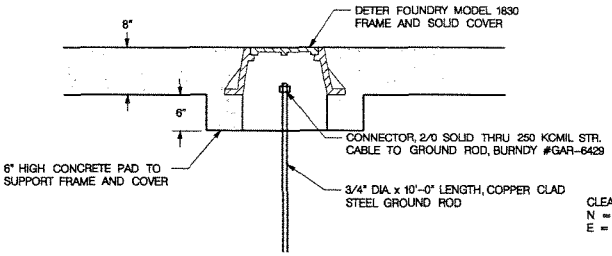

NOTE: THE GROUND ROD PAY ITEM SHALL INCLUDE THE 3/4"ø x 10'-0" ROD, FRAME AND COVER, CONNECTOR AND CONCRETE PAD TO SUPPORT THE FRAME AND COVER

GROUND ROD DETAIL

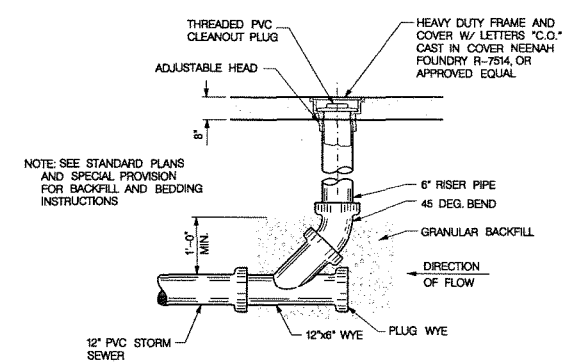

NOTE: SEE STANDARD PLANS AND SPECIAL PROVISION FOR BACKFILL AND BEDDING INSTRUCTIONS

STORM SEWER CLEAN-OUT

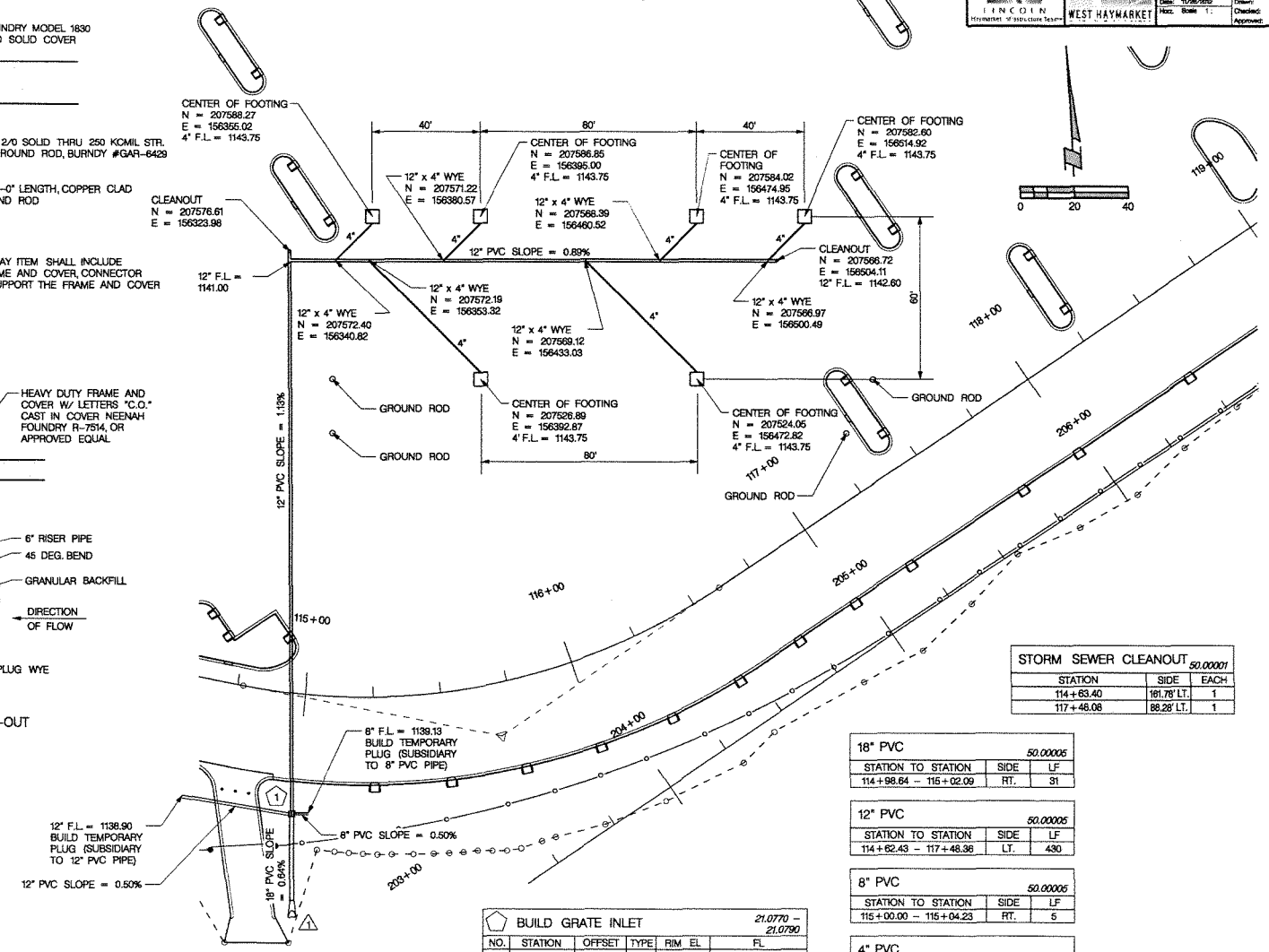

GROUND ROD* 24.09000		
STATION	SIDE	EACH
114+98.85	117.87' LT.	1
115+02.07	97.96' LT.	1
117+33.19	21.31' LT.	1
117+52.71	32.22' LT.	1

*VERIFY FINAL LOCATION OF GROUND RODS WITH EVENT STAFF

BUILD GRATE INLET 21.0770 – 21.0790					
NO.	STATION	OFFSET	TYPE	RIM EL	FL
1	114+99.18	44.50' RT.	F	1143.00	18" = 1138.70 (S) 12" = 1138.70 (N) 12" = 1138.70 (W) 8" = 1139.10 (E)

R.C. FLARED END SECTION 21.0600 – 21.0620				
NO.	STATION	OFFSET	FL	DESCRIPTION
1	115+01.53	76.43' RT.	1138.50	18" PVC PIPE OUTLET

STORM SEWER CLEANOUT 50.00001		
STATION	SIDE	EACH
114+63.40	161.78' LT.	1
117+46.08	88.28' LT.	1

18" PVC 50.00005		
STATION TO STATION	SIDE	LF
114+98.64 – 115+02.09	RT.	31

12" PVC 50.00005		
STATION TO STATION	SIDE	LF
114+62.43 – 117+48.36	LT.	430

8" PVC 50.00005		
STATION TO STATION	SIDE	LF
115+00.00 – 115+04.23	RT.	5

4" PVC 50.00005		
STATION TO STATION	SIDE	LF
114+62.91 – 117+48.36	LT.	195

12" x 4" PVC WYE 50.00001		
STATION TO STATION	SIDE	LF
114+62.91 – 117+48.36	LT.	6

STAGE FOUNDATIONS LAYOUT
REVISED ADDENDUM #3

117-E-97

117-E-97

EXHIBIT A OF CONTRACT AGREEMENT

This document was originally approved and sealed on November 28, 2012 by Thomas A. Leikam, a licensed professional engineer in the State of Nebraska E-6290. This media should not be considered a certified document.

PROJECT NO.	SHEET NO.
870201	20A
Date: 11/28/2012	Drawn: Checked: Approved:

WEST HAYMARKET

PAY QUANTITIES

4" DIA. CONDUIT IN BRIDGE = 1,372 LIN. FT.

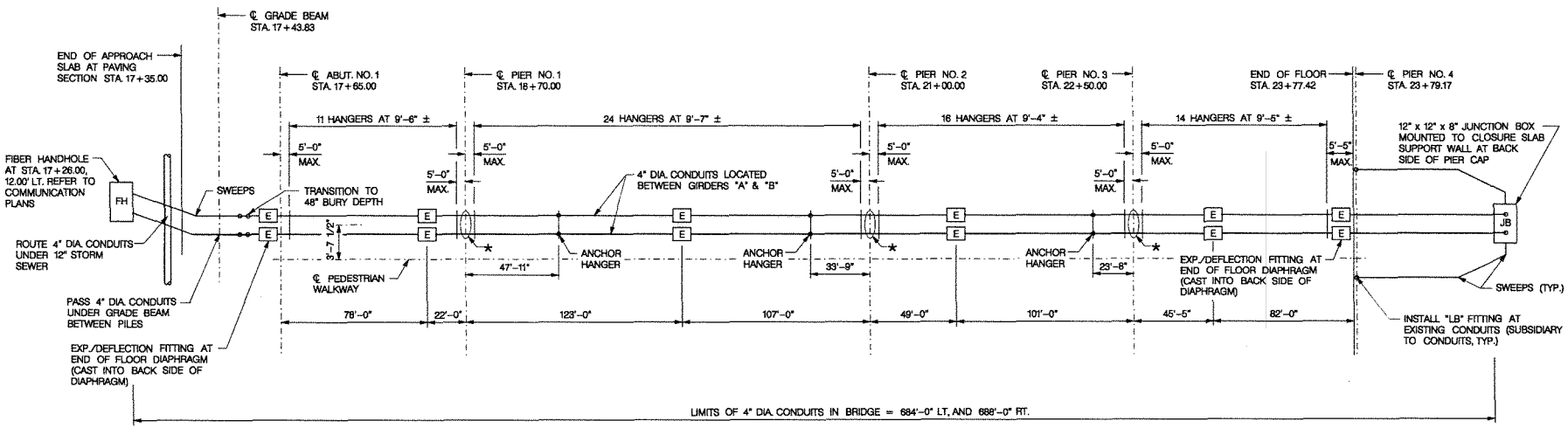

LINE DIAGRAM FOR 4" DIA. CONDUITS SUPPORTED UNDER BRIDGE DECK
NOT TO SCALE

* PROVIDE SLEEVES AT PIER DIAPHRAGMS REFER TO SHEETS 27 & 28 OF BRIDGE PLANS. ROUTE CONDUIT OVER INTERMEDIATE STEEL DIAPHRAGMS.

4" DIA. CONDUIT NOTES:

1. ALL HANGER ASSEMBLIES, EXPANSION FITTINGS, "LB" FITTINGS, SWEEPS AND JUNCTION BOXES SHALL NOT BE PAID FOR DIRECTLY BUT SHALL BE CONSIDERED SUBSIDIARY TO THE PAY ITEM FOR THE CONDUIT.
2. ALL JUNCTION BOXES AND LOW SPOTS ALONG THE CONDUIT RUNS SHALL BE PROVIDED WITH 1/2" DIAMETER DRAINS.
3. THE LOCATION OF THE HANGER ASSEMBLIES MAY BE ADJUSTED IN THE FIELD AS NECESSARY TO CLEAR THE PERMANENT OR TEMPORARY DIAPHRAGMS BETWEEN THE GIRDERS. MAXIMUM SPACING BETWEEN HANGERS SHALL BE 10'-0".
4. THE CONDUIT AND HANGER ASSEMBLIES SHALL BE INSTALLED SO THAT THE CONDUITS ARE ROUTED OVER THE TOP OF THE STEEL DIAPHRAGMS.
5. SIX INCH DIAMETER SLEEVES SHALL BE PLACED AT ALL INTERMEDIATE CONCRETE DIAPHRAGMS AND AT THE PIER DIAPHRAGMS TO ACCOMMODATE THE 4" CONDUIT INSTALLATION.
6. ALL EXPANSION FITTINGS SHALL BE INSTALLED WITH THE FITTING POSITIONED BASED UPON THE AMBIENT TEMPERATURE AT THE TIME OF INSTALLATION TO PROVIDE FOR MAXIMUM MOVEMENT AT THE FITTING THROUGH A TEMPERATURE RANGE OF -30° F AND 120° F.
7. ANCHOR HANGER ASSEMBLIES SHALL BE PROVIDED APPROXIMATELY MIDWAY BETWEEN EXPANSION FITTINGS. THE CONDUITS SHALL BE SECURED TO THE ANCHOR HANGERS WITH CLAMPS OR OTHER MECHANICAL DEVICES. CONDUITS SHALL BE FREE TO EXPAND OR CONTRACT ACROSS INTERMEDIATE HANGERS. ALL FITTINGS OR BELLS AT
8. CONDUITS SHALL BE LOCATED A MINIMUM OF 18 INCHES OUTSIDE THE HANGERS TO PREVENT THE FITTING FROM RESTRICTING THE CONDUIT MOVEMENT THROUGH THE HANGER.
9. ALL EXPANSION FITTINGS SHALL BE LOCATED WITHIN 30 INCHES OF A HANGER ASSEMBLY.
10. ALL SWEEPS SHALL BE ACCURATELY FORMED TO MEET ALL NEC REQUIREMENTS. SWEEPS SHALL BE USED AT ALL DEFLECTIONS IN CONDUIT RUNS BOTH HORIZONTALLY AND VERTICALLY.
11. ALL CONDUITS BELOW THE CLOSURE SLAB AT PIER NO. 4 SHALL BE SUPPORTED AS REQUIRED BY THE NEC CODE. CONDUIT SUPPORTS AT PIER NO. 4 SHALL NOT BE PAID FOR SEPARATELY BUT SHALL BE SUBSIDIARY TO THE CONDUIT.

LEGEND

E	EXPANSION FITTING
JB	JUNCTION BOX 12" x 12" x 8"
FH	FIBER VAULT AS SHOWN ON COMMUNICATION PLANS
	ANCHOR HANGER
	VERTICAL SWEEP OR TRANSITION

4" DIA. CONDUITS IN BRIDGE
ADDENDUM NO. 3

117-E-97

PROJ: Parking Lot & Ped Bridge
FILE: 117-E-97.dgn
USER: Thomas.Leikam
DATE: 11/28/2012
DGN: P:\PROJECTS\870-249\Design\Sheets_Parking_Ped_Bridge\Conduit Layout Addendum No 3\870201CONDUITR1.dgn

117-E-97

This document was originally approved and sealed on November 28, 2012 by Thomas A. Leikam, a licensed professional engineer in the State of Nebraska E-6290. This media should not be considered a certified document.

EXHIBIT A OF CONTRACT AGREEMENT

PROJECT NO.	SHEET NO.
870201	208

Date: 11/26/2012 Drawn: Checked: Approved:

LINCOLN Haymarket Infrastructure Tasks — WEST HAYMARKET

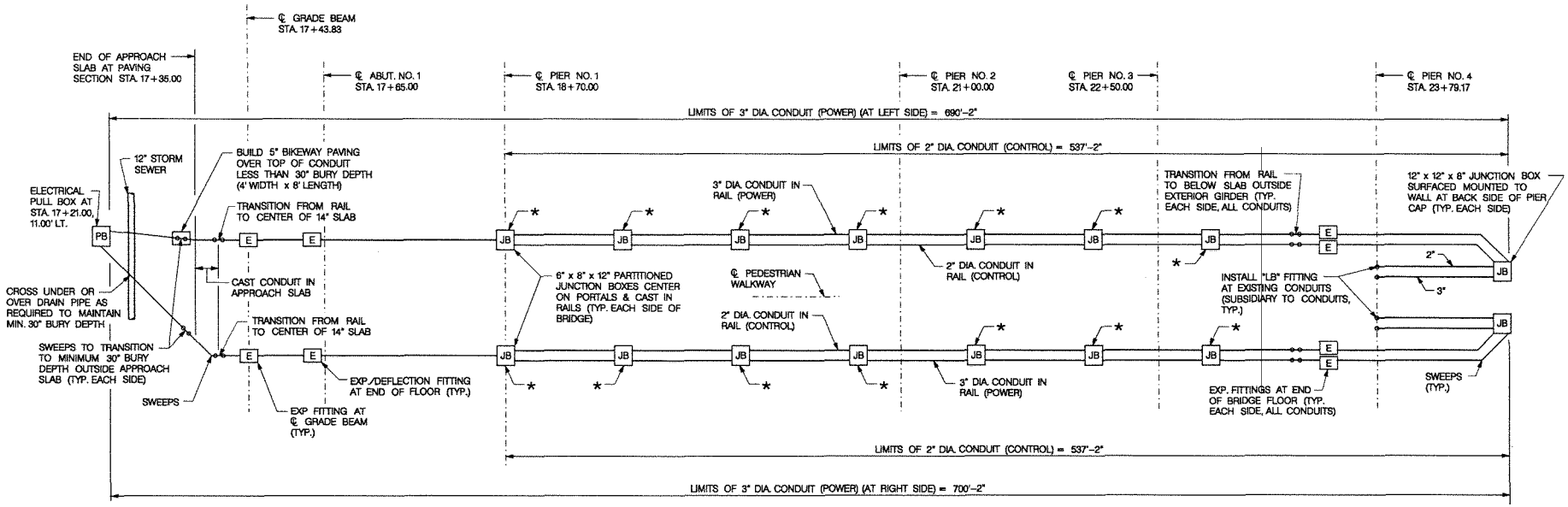

LINE DIAGRAM FOR 3" DIA. AND 2" DIA. CONDUITS CAST IN RAIL
NOT TO SCALE

* PROVIDE TWO - 2" DIA. CONDUITS, 3'-6" ± LENGTH FROM JUNCTION BOXES AT PORTALS TO EXTEND 6" ABOVE THE TOP OF RAIL AND PROVIDE TEMPORARY CAP. TOTAL PAY LENGTH OF 2" DIA. CONDUIT AT EACH JUNCTION BOXES AT PORTALS IS 7'-0"

3" AND 2" DIA. CONDUIT NOTES:

1. ALL EXPANSION FITTINGS, "LB" FITTINGS, SWEEPS AND JUNCTION BOXES SHALL NOT BE PAID FOR DIRECTLY BUT SHALL BE CONSIDERED SUBSIDIARY TO THE PAY ITEM FOR THE CONDUIT.
2. ALL JUNCTION BOXES AND LOW SPOTS ALONG THE CONDUIT RUNS SHALL BE PROVIDED WITH 1/2" DIAMETER DRAINS.
3. THE JUNCTION BOXES AT THE RAILS SHALL BE CAST IN PLACE AND SHALL PROVIDE A WATERTIGHT COVER. THE JUNCTION BOXES AT PIER NO. 4 SHALL BE SURFACE MOUNTED TO THE BACK SUPPORT WALL FOR THE CLOSURE SLAB AND SHALL BE A WATERTIGHT BOX.
4. ALL EXPANSION FITTINGS SHALL BE INSTALLED WITH THE FITTING POSITIONED BASED UPON THE AMBIENT TEMPERATURE AT THE TIME OF INSTALLATION TO PROVIDE FOR MAXIMUM MOVEMENT THROUGH A TEMPERATURE RANGE OF -30° F AND 120° F.
5. ALL SWEEPS SHALL BE ACCURATELY FORMED TO MEET ALL NEC REQUIREMENTS. SWEEPS SHALL BE USED AT ALL DEFLECTIONS IN CONDUIT RUNS BOTH HORIZONTALLY AND VERTICALLY.
6. ALL CONDUITS BELOW THE CLOSURE SLAB AT PIER NO. 4 SHALL BE SUPPORTED AS REQUIRED BY THE NEC CODE. CONDUIT SUPPORTS AT PIER NO. 4 SHALL NOT BE PAID FOR SEPARATELY BUT SHALL BE SUBSIDIARY TO THE CONDUIT.
7. JUNCTION BOXES AT THE RAIL SHALL HAVE A PARTITION INSTALLED IN ACCORDANCE WITH NEC REQUIREMENTS TO SEPARATE THE CONTROL WIRING FROM THE POWER WIRING. THE PARTITIONS MAY BE GALVANIZED STEEL OR OTHER MANUFACTURER APPROVED MATERIAL THAT MEETS THE NEC REQUIREMENTS.
8. THE PAY QUANTITIES FOR THE CONDUITS SHALL BE AS SHOWN ON THE LINE DIAGRAM.

ELECTRICAL CONDUIT QUANTITIES
3" DIA. CONDUIT IN BRIDGE = 1,390'-4"
2" DIA. CONDUIT IN BRIDGE = 1,172'-4"

LEGEND

- [E] EXPANSION FITTING (PROVIDE EXPANSION FITTING THAT WILL ACCOMMODATE MINER DEFLECTION/ROTATION AT END OF BRIDGE FLOOR)
- [JB] JUNCTION BOX 10" x 10" x 6" AT RAIL OR 12" x 12" x 8" AT PIER NO. 4
- [PB] PULL BOX AS SHOWN ON ELECTRICAL PLANS
- —o-o— VERTICAL SWEEP OR TRANSITION

3" DIA. AND 2" DIA. CONDUITS IN BRIDGE
ADDENDUM NO. 3

117-E-97

PROJ: Parking Lot & Ped Bridge
FILE: SW_Parkside
DESIGN: Walter Sieber
DATE: 11/26/2012
DGN: P:\PROJECTS\010-249\Design\Sheets_Parking_Ped_Bridge\Conduit Layout Addendum No 3\870201CONDUITR2.dgn

EXHIBIT A OF CONTRACT AGREEMENT

This document was originally approved and sealed on November 28, 2012 by Thomas A. Leikam, a licensed professional engineer in the State of Nebraska E-6290. This media should not be considered a certified document.

PROJECT NO.	SHEET NO.
870201	20C

Date: 11/28/2012 Horz. Scale: 1:
Drawn:
Checked:
Approved:

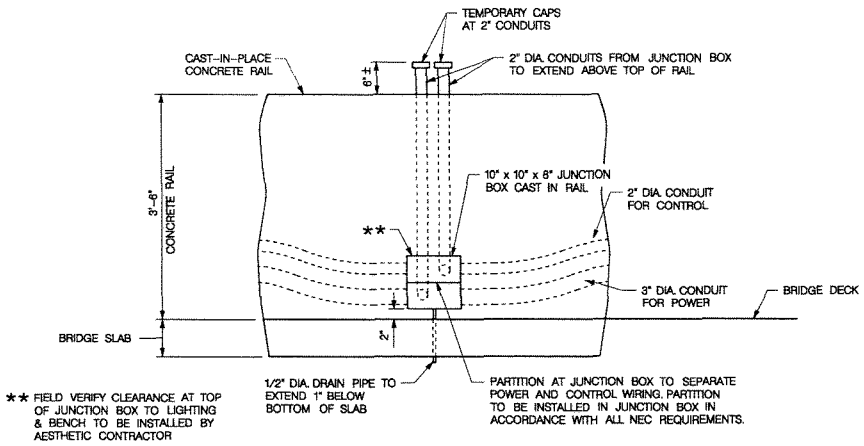

DETAIL OF JUNCTION BOX INSTALLATION AT CONCRETE RAIL
FOR 3" DIA. AND 2" DIA. CONDUITS

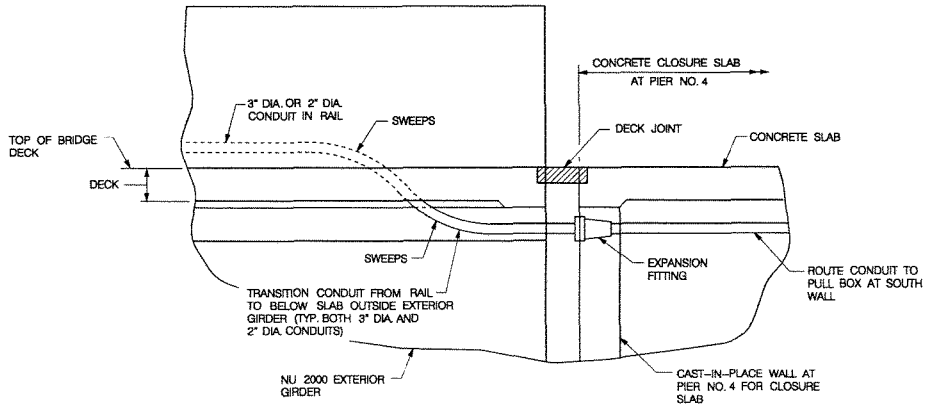

DETAIL OF 3" DIA. AND 2" DIA. CONDUIT TRANSITION
FROM RAIL TO BELOW DECK AT PIER NO. 4

CONDUIT DETAILS
ADDENDUM NO. 3

117-E-97

PROJ: Parking Lot & Ped Bridge
PTEN: SW Parcelle
PTEN: Haymarket
DATE: 11/28/2012
DGN: P:\projects\870-2407\design\sheets_parking_ped_bridge\conduit layout addendum no 3\870201CNDLUT03.dgn

117-E-97

EXHIBIT A OF CONTRACT AGREEMENT

This document was originally approved and sealed on November 28, 2012 by Thomas A. Leikam, a licensed professional engineer in the State of Nebraska E-6290. This media should not be considered a certified document.

ADDENDUM NO. 4

WEST HAYMARKET JOINT PUBLIC AGENCY
HAYMARKET INFRASTRUCTURE IMPROVEMENT
PARKING LOT, FESTIVAL SPACE & PEDESTRIAN BRIDGE
PROJECT NO. 870201
BID NO. 12-291

Addenda are instruments issued by the Purchasing Office prior to the date or time for receipt of offers which will modify or interpret the specifications document by addition, deletion, clarification or correction.

Please acknowledge receipt of this addendum in the space provided in the Attribute Section.

Please be advised of the following changes and clarifications to the City's specification and bidding documents:

1. Refer to Addendum No. 3, revised Sheet 16, Stage Foundation Layout.

   Replace the sheet with the attached sheet identified as "Revised Addendum # 4". The changes on this sheet revised the build tab for the 18" pipe which was inadvertently labeled as 18" PVC to read "RCP Storm Sewer", added some additional notes for pipe lengths on the layout plan for the storm sewer, added some additional coordinate information for the revised piping and corrected the description at the R.C. Flared End Section build tab to refer to 18" RCP Outlet. The revised quantities shown in Addendum No. 3 correctly identified this pipe as RCP Storm Sewer, Cl III, 18", so there are no revisions to the bid quantities associated with the storm sewer layout shown on this sheet as part of this addendum.

2. Refer to Addendum No. 3, Item 15 regarding the pavement construction quantities on Sheet 73 of the Construction and Removal plans.

   The PCC Pavement Build Note that was revised should be modified as follows to reference the 6" Paving only to the left of the station range shown in the note. The corrected note shall read as follows for the 6" paving:

   Sta. 112+56.40 – Sta. 117+80.51, Lt; 6" Paving; 1,850 SY

3. Refer to the Insurance Requirements.

   The Builders Risk Insurance requirement shall only apply to the construction work associated with the Pedestrian Bridge.

This document was originally approved and sealed on November 30, 2012 by Thomas A. Leikam, a licensed professional engineer in the State of Nebraska E-6290. This media should not be considered a certified document.

4. Refer to the Special Provisions, Contractor Qualifications.

   The following Contractor has submitted the required qualifications forms for review prior to the bids opening. The JPA has reviewed the Contractors qualifications that were submitted and have approved the following Contractor as being prequalified to complete the bridge construction work as outlined for this project:

   MCC, L.L.C.

   Addendum No. 3 preapproved the following contractors as qualified to complete the bridge construction work as outlined for this project:

   Cramer & Associates
   Hawkins Construction
   Commercial Construction Inc.

5. Refer to the Pre-bid Meeting Minutes, Discussion Topics, Paragraph a, Sub-paragraph x.

   The additional details for the closure slab and drainage system at Pier No. 4 that were identified to be added as an addendum to the project have not been completed and will not be available for perspective bidders to use in preparing their bids on this project prior to the bid opening date. Therefore the additional work and compensation required to construct the closure slab and drainage system at Pier No. 4 will be negotiated with the selected Contractor following award and added to the contract through change order.

Dated this 30th day of November 2012.

This document was originally approved and sealed on November 30, 2012 by Thomas A. Leikam, a licensed professional engineer in the State of Nebraska E-6290. This media should not be considered a certified document.

This document was originally approved and sealed on November 30, 2012 by Thomas A. Leikam, a licensed professional engineer in the State of Nebraska E-6290. This media should not be considered a certified document.

PROJECT NO.	SHEET NO.
870201	16

Date: 11/30/2012 Horz. Scale 1: Drawn: Checked: Approved:

LINCOLN Haymarket Associates Team — WEST HAYMARKET

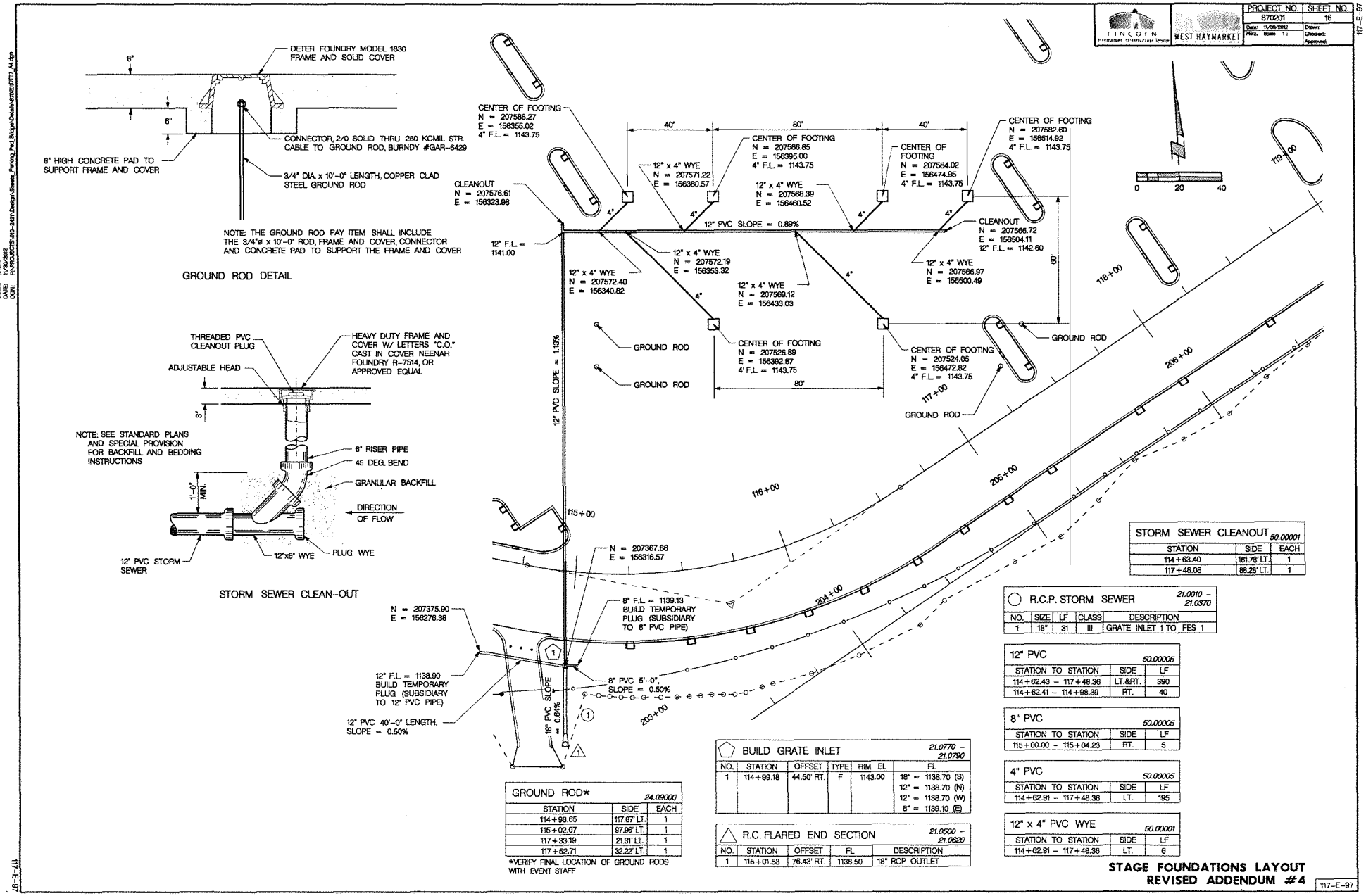

GROUND ROD* 24.09000		
STATION	SIDE	EACH
114+98.65	117.67' LT.	1
115+02.07	97.96' LT.	1
117+33.19	21.31' LT.	1
117+52.71	32.22' LT.	1

*VERIFY FINAL LOCATION OF GROUND RODS WITH EVENT STAFF

BUILD GRATE INLET 21.0770 – 21.0790					
NO.	STATION	OFFSET	TYPE	RIM EL	FL
1	114+99.18	44.50' RT.	F	1143.00	18" = 1138.70 (S) 12" = 1138.70 (N) 12" = 1138.70 (W) 8" = 1139.10 (E)

R.C. FLARED END SECTION 21.0500 – 21.0620				
NO.	STATION	OFFSET	FL	DESCRIPTION
1	115+01.53	76.43' RT.	1138.50	18" RCP OUTLET

STORM SEWER CLEANOUT 50.00001		
STATION	SIDE	EACH
114+63.40	161.78' LT.	1
117+48.08	88.28' LT.	1

R.C.P. STORM SEWER 21.0010 – 21.0370				
NO.	SIZE	LF	CLASS	DESCRIPTION
1	18"	31	III	GRATE INLET 1 TO FES 1

12" PVC 50.00005		
STATION TO STATION	SIDE	LF
114+62.43 – 117+48.36	LT.&RT.	390
114+62.41 – 114+98.39	RT.	40

8" PVC 50.00005		
STATION TO STATION	SIDE	LF
115+00.00 – 115+04.23	RT.	5

4" PVC 50.00005		
STATION TO STATION	SIDE	LF
114+62.91 – 117+48.36	LT.	195

12" x 4" PVC WYE 50.00001		
STATION TO STATION	SIDE	LF
114+62.91 – 117+48.36	LT.	6

STAGE FOUNDATIONS LAYOUT
REVISED ADDENDUM #4

117-E-97

PROJ: Parking Lot & Ped Bridge
PRN: BW_Permitte
USER: Brian Wilson
DATE: 11/30/2012
DGN: P:\PROJECTS\010-26th Design\Sheets_Parking_Ped_Bridge\Details\870201_A4.dgn

117-E-97

EXHIBIT A OF CONTRACT AGREEMENT

City of Lincoln/Lancaster County (Lincoln Purchasing)
Supplier Response

Bid Information

Bid Creator	Lori L. Irons
Email	lirons@lincoln.ne.gov
Phone	(402) 441-7416
Fax	(402) 441-6513
Bid Number	12-291 Addendum 4
Title	Haymarket Improvements - Parking Lot, Festival Space and Pedestrian Bridge Project 870201 (PW/U - Eng. Services)
Bid Type	Bid
Issue Date	11/02/2012
Close Date	12/5/2012 2:30:00 PM CST
Need by Date	

Contact Information

Address	Purchasing\City & County 440 S. 8th St. Lincoln, NE 68508
Contact	Vince M. Mejer
Department	
Building	
Floor/Room	
Telephone	(402) 441-8314
Fax	(402) 441-6513
Email	vmejer@lincoln.ne.gov

Ship to Information

Address	
Contact	
Department	
Building	
Floor/Room	
Telephone	
Fax	
Email	

Supplier Information

Company	Hawkins Construction Company
Address	2516 Deer Park Blvd Omaha, NE 68105
Contact	
Department	
Building	
Floor/Room	
Telephone	1 (402) 342-1607
Fax	1 (402) 342-3221
Email	
Submitted	12/5/2012 1:43:58 PM CST
Total	$7,270,489.12

Signature _____

Supplier Notes

Bid Notes

PreBid on Nov. 14th at 1:30 pm at Olsson Associates, 1111 Lincoln Mall in the West Haymarket Arean Conf Room, 2nd Floor, east side of bldg.

If you need assistance in preparing your bid, 1) Click the "Help" button in the upper right hand corner of any screen; 2) Contact our office at 402-441-7417 to set up a training session in Purchasing or assistance over the phone.

Bid Activities

Date	Name	Description
11/14/2012 1:30:00 PM	PreBid	PreBid on Nov. 14th at 1:30pm at Olsson Associates, 1111 Lincoln Mall in the West Haymarket Arena Conf Room, 2nd Floor, east side of the building.

EXHIBIT A OF CONTRACT AGREEMENT

12/5/2012 12:00:00 PM	General Contractors - Call 402-441-7417 or e-mail purchasing@lincoln.ne.gov to be added to this list.	Suppliers who will bid as a general contractor on this bid.
12/5/2012 12:00:00 PM	Sub-Contractors - Call 402-441-7417 or e-mail purchasing@lincoln.ne.gov to be added to this list.	Suppliers who will bid as a sub-contractor.

Bid Messages

Please review the following and respond where necessary

#	Name	Note	Response
1	Standard Specifications for Municipal Construction	I acknowledge reading and understanding the current City of Lincoln Standard Specifications for Municipal Construction and Lincoln Standard Plans (including General Provisions and Requirements, and Material and Construction Specifications) View at: http://www.lincoln.ne.gov/city/pworks/engine/dconst/standard/stndspec/index.htm	Yes
2	Form of Bonds	I acknowledge that a Performance Bond and a Payment Bond each in the amount of 100% of the Contract amount will be required with the signed contract upon award of this job.	Yes
3	Special Provisions/Traffic Control Provisions	I acknowledge reading and understanding the Special Provisions and/or Traffic Control Provisions.	Yes
4	Instructions to Bidders	I acknowledge reading and understanding the Instructions to Bidders.	Yes
5	Insurance Requirements	I acknowledge reading and understanding the Insurance Requirements.	Yes
6	Davis-Bacon	I acknowledge reading and understanding the 29 CFR and Davis-Bacon Wage Rates.	Yes
7	Special Provisions	I acknowledge reading and understanding the Special Provisions.	Yes
8	Plan, Profile & Detail Sheets	I acknowledge reading and understanding the Plan, Profile & Detail Sheets included with this bid.	Yes
9	Geotechnical Report	I acknowledge reading and understanding the Geotechnical Report.	Yes
10	Environmental Contigency Plan	I acknowledge reading and understanding the Environmental Contigency Plan.	Yes
11	Location Map	I acknowledge reviewing understand the Location Map.	Yes
12	Grading Plan Sheets 1 and 2	I acknowledge reading and understanding the Grading Plan Sheets 1 and 2.	Yes
13	Beneficial Soils and Construction and Demolition Waste Materials Requirements	I acknowledge reading and understanding the Beneficial Soils and Construction and Demolition Waste Materials Requirements.	Yes

14	Contractor Certification of Compliance	I acknowledge reading and understanding the Contractor Certification and Compliance.	Yes
15	Contractor Qualification Form	I acknowledge reading, understanding and returning the Contractor Qualification Form with my Bid.	Yes
16	Contractors Project Manager Qualifications Form	I acknowledge reading, understanding and returning the Contractors Project Manager Qualification Form with my Bid.	Yes
17	Tax Exempt Certificate Forms	Materials being purchased in this bid are tax exempt and unit prices are reflected as such. A Purchasing Agent Appointment form and a Exempt Sales Certificate form shall be issued with contract documents. (Note: State Tax Law does not provide for sales tax exemption for proprietary functions for government, thereby Water projects are taxable.)	Yes
18	Bid Bond Submission - City	I acknowledge and understand that my bid will not be considered unless a bid bond or certified check in the sum of five percent (5%) of the total amount of the bid is made payable to the order of the City Treasurer as a guarantee of good faith prior to the bid opening. The bid security may be scanned and attached to the 'Response Attachments' section of your response or faxed to the Purchasing Office (402)441-6513. The original bond/check must then be received in the Purchasing Office, 440 S. 8th Street, Ste. 200, Lincoln, NE 68508 within three (3) days of bid closing. YOU MUST INDICATE YOUR METHOD OF BID BOND SUBMISSION IN BOX TO RIGHT!	I have scanned and attached my bid bond.
19	Unit Pricing Rules	I acknowledge the Excel spreadsheet is attached to this bid in the Response Attachment Section. The unit price of the Excel Spreadsheet takes precedence over the total submitted in Line Items.	Yes
20	Project Dates	The Contractor agrees that the Work in this Contract shall begin as soon after the Notice to Proceed as is necessary for the Contractor to complete the Work within the number of calendar days allowed and prior to the stated completion date. The completion date shall be completed no later than October 25, 2013.	YES
21	Employee Class Act EO	I acknowledge reading and understanding the Employee Classification Act, Executive Order 83319.	Yes
22	Employee Class Act Affidavit	I acknowledge if awarded the contract I will abide by the law, notorize and attach the Employee Classification Act Affidavit to my contract.	Yes
23	Contact	Name of person submitting this bid:	Nick Gaebel
24	Electronic Signature	Please check here for your electronic signature.	Yes
25	Agreement to Addendum No. 1	Respondent hereby certifies that the change set forth in this addendum has been incorporated in their proposal and is part of their bid. Reason: See Bid Attachments section for Addendum information.	Yes
26	Sample Contract	I acknowledge reading and understanding the sample contract.	Yes
27	Agreement to Addendum No. 2	Respondent hereby certifies that the change set forth in this addendum has been incorporated in their proposal and is part of their bid. Reason: Attached Addendum No. 2 and revised pricing sheet.	Yes

28	Agreement to Addendum No. 3	Respondent hereby certifies that the change set forth in this addendum has been incorporated in their proposal and is part of their bid. Reason: See Bid Attachments section for Addendum information.	Yes
29	Agreement to Addendum No. 4	Respondent hereby certifies that the change set forth in this addendum has been incorporated in their proposal and is part of their bid. Reason: See Bid Attachments section for Addendum information.	Yes

Line Items

#	Qty	UOM	Description	Response
2	1	EA	Haymarket Improvements - Parking Lot, Festival Space and Pedestrian Bridge Project 870201 -- Total Lump Sum of Bid	$7,270,489.12

Item Notes: Fill out the itemized Excel spreadsheet attached below. Attach completed spreadsheet on the 'Response Attachments' of your response.

Supplier Notes:

Response Total: $7,270,489.12

EXHIBIT A OF CONTRACT AGREEMENT

12-291

HAWKINS CONSTRUCTION CO

Line No.	Pay Item No.	Description	Quantity	Unit	Unit Price	Amount
001	01.00001	Mobilization	1.0000	LS	$726,313.84	$726,313.84
002	01.01001	Const Staking	1.0000	LS	$40,802.98	$40,802.98
003	01.04001	Pavt & Sidewalk Rem	1,752.0000	CY	$21.67	$37,965.84
004	01.06001	Sawing, Type "B"	903.0000	LF	$2.63	$2,374.89
005	01.07001	Sawing, Type "C"	41.0000	LF	$2.63	$107.83
006	01.11001	Adj MH to Grade	4.0000	EA	$239.42	$957.68
007	01.12002	Adj Grate Inlet to Grade	1.0000	EA	$948.31	$948.31
008	01.13001	Adj Water Valve Box To Grade	1.0000	EA	$116.96	$116.96
009	02.01001	Gen Clearing & Grubbing	1.0000	LS	$27,771.27	$27,771.27
010	02.05001	Excavation	22,023.0000	CY	$4.01	$88,312.23
011	02.08001	Earthwork Measured in Embankment	27,905.0000	CY	$5.46	$152,361.30
012	04.09106	PCC Pavt w/Int Curb, 6"	33,584.0000	SY	$24.91	$836,577.44
013	04.09108	PCC Pavt w/Int Curb, 8"	16,777.0000	SY	$30.40	$510,020.80
014	04.09305	Conc Sidewalk, 5"	8,187.0000	SF	$3.16	$25,870.92
015	04.09306	Conc Sidewalk, 6"	821.0000	SF	$6.05	$4,967.05
016	04.09406	Conc Driveway, 6"	1,506.0000	SF	$3.41	$5,135.46
017	04.09505	Conc Bikeway, 5"	38,854.0000	SF	$2.97	$115,396.38
018	04.09601	Combined Curb & Gutter	388.0000	LF	$13.87	$5,381.56
019	04.09804	Conc Median Surfacing, 4"	1,041.0000	SF	$3.37	$3,508.17
020	04.11001	Detectable Warning Panels	180.0000	SF	$20.78	$3,740.40
021	07.08010	Conc for Steps & Retaining Walls	72.0000	CY	$467.95	$33,692.40
022	07.08020	Reinf Stl for Steps & Retaining Walls	5,520.0000	LBS	$0.92	$5,078.40
023	07.08030	Modular Block Retaining Wall	858.0000	SF	$24.63	$21,132.54
024	07.08040	Handrails	415.0000	LF	$75.06	$31,149.90
025	08.02072	Chain Link Fence, 72"	140.0000	LF	$17.95	$2,513.00
026	09.03001	Crushed Rock Roadway Surfacing	200.0000	TON	$29.83	$5,966.00
027	13.07004	Paint Mkg, 4" W	28,895.0000	LF	$0.40	$11,558.00
028	13.08010	Raised Pavt Markers	3.0000	EA	$17.24	$51.72
029	13.09001	Tubular Markers, Channel Mount	2.0000	EA	$189.67	$379.34
030	14.01010	Traffic Sign, < 4 Sq Ft	26.0000	EA	$126.44	$3,287.44
031	14.01012	Traffic Sign, 4 Sq Ft < 9 Sq Ft	2.0000	EA	$258.63	$517.26
032	14.03210	"U" Channel Sign Posts	151.0000	LF	$8.62	$1,301.62
033	14.03211	Ground Sleeve	4.0000	EA	$137.94	$551.76
034	14.04010	Street Name Posts (Round)	12.0000	LF	$14.36	$172.32
035	15.09001	Traffic Control for Const	1.0000	LS	$8,621.07	$8,621.07
036	20.05001	Found Material	300.0000	CY	$35.00	$10,500.00
037	20.07001	Conc for Collars, Elbows, Plugs & Hdwls	0.9500	CY	$580.39	$551.37
038	20.07002	Reinf Steel for Collars, Elbows, Plugs & Hdwls	116.0000	LBS	$0.90	$104.40
039	20.09001	Conc for Thrust Blocks & Anchorages	5.5400	CY	$410.93	$2,276.55
040	20.09002	Reinf Stl for Thrust Blks & Anchorages	84.1000	LBS	$2.02	$169.88
041	21.03018	Rem Storm Sewer Pipe, 18"	100.0000	LF	$6.60	$660.00

EXHIBIT A OF CONTRACT AGREEMENT

042	21.03030	Rem Storm Sewer Pipe, 30"	26.0000	LF	$6.60	$171.60
043	21.03315	RCP Storm Sewer, Cl III, 15"	582.0000	LF	$23.71	$13,799.22
044	21.03318	RCP Storm Sewer, Cl III, 18"	478.0000	LF	$33.32	$15,926.96
045	21.03324	RCP Storm Sewer, Cl III, 24"	40.0000	LF	$47.13	$1,885.20
046	21.05002	Tap Ex Storm Sewer Inlet & Replace	1.0000	EA	$652.76	$652.76
047	21.07015	Storm Sewer MH, 15" - 30"	3.0000	EA	$3,178.30	$9,534.90
048	21.08001	Storm Sewer Inlet, 72"	5.0000	EA	$2,354.84	$11,774.20
049	21.08002	Canted Storm Sewer Inlet, 72"	2.0000	EA	$2,292.69	$4,585.38
050	21.08011	Grate Inlet, Ty "F-1"	5.0000	EA	$1,231.98	$6,159.90
051	21.12018	Rem RC FES, 18"	1.0000	EA	$55.18	$55.18
052	21.12124	Rem & Reset RC FES, 24"	1.0000	EA	$78.53	$78.53
053	21.12215	RC FES, 15"	1.0000	EA	$552.49	$552.49
054	21.12218	RC FES, 18"	2.0000	EA	$472.74	$945.48
055	21.13001	Rem Ex Manhole	1.0000	EA	$244.84	$244.84
056	21.16001	Geotextile Filter Fabric	810.0000	SY	$2.07	$1,676.70
057	22.08201	Construct Sanitary Sewer Service	9.0000	EA	$338.77	$3,048.93
058	22.08304	Pipe Sewer Service, 4"	135.0000	LF	$43.55	$5,879.25
059	23.04006	Rem 6" Water Main	11.0000	LF	$11.96	$131.56
060	23.04106	Rem & Salvage Reducer	1.0000	EA	$119.54	$119.54
061	23.07004	Water Main, 4"	611.0000	LF	$26.35	$16,099.85
062	23.07008	Water Main, 8"	1,400.0000	LF	$34.03	$47,642.00
063	23.07072	Anchoring Coupling, MJ (L=18"), 6"	5.0000	EA	$172.21	$861.05
064	23.07081	Reducer, MJ, 8" X 6"	1.0000	EA	$202.33	$202.33
065	23.07100	Deg Bend, MJ, 4" x 90	3.0000	EA	$174.18	$522.54
066	23.07102	Deg Bend, MJ, 8" x 90	2.0000	EA	$245.85	$491.70
067	23.07111	Deg Bend, MJ, 8" X 45	2.0000	EA	$227.30	$454.60
068	23.07122	Deg Bend, MJ, 8" X 22.5	1.0000	EA	$225.37	$225.37
069	23.07123	Deg Bend, MJ, 12" X 22.5	1.0000	EA	$320.11	$320.11
070	23.07132	Deg Bend, MJ, 8" X 11.25	1.0000	EA	$218.98	$218.98
071	23.07133	Deg Bend, MJ, 12" X 11.25	1.0000	EA	$310.51	$310.51
072	23.07302	Tee, MJ, 8" X 6"	4.0000	EA	$340.63	$1,362.52
073	23.07506	Solid Sleeve, MJ (L=12"), 6"	2.0000	EA	$203.62	$407.24
074	23.07508	Solid Sleeve, MJ (L=12"), 8"	1.0000	EA	$246.50	$246.50
075	23.07704	Plug, MJ, 4"	1.0000	EA	$70.45	$70.45
076	23.07804	Retainer Glands, MJ, 4"	12.0000	EA	$50.35	$604.20
077	23.07806	Retainer Glands, MJ, 6"	17.0000	EA	$54.32	$923.44
078	23.07808	Retainer Glands, MJ, 8"	25.0000	EA	$71.50	$1,787.50
079	23.07812	Retainer Glands, MJ, 12"	4.0000	EA	$120.40	$481.60
080	23.08006	Gate Valve, MJ, 6"	6.0000	EA	$889.47	$5,336.82
081	23.08008	Gate Valve, MJ, 8"	1.0000	EA	$1,198.80	$1,198.80
082	23.08204	Tapping Sleeve & Valve, MJ, 8" x 4"	1.0000	EA	$2,728.86	$2,728.86
083	23.08355	Hydrant, L=5.5'	4.0000	EA	$2,077.69	$8,310.76
084	23.08400	Hydrant Extension	1.0000	EA	$873.60	$873.60

085	23.09001	Temporary Hydrant and Blow-off	1.0000	EA	$1,724.21	$1,724.21
086	23.10100	Copper Water Service Pipe, 1"	63.0000	LF	$23.68	$1,491.84
087	23.10200	Copper Water Service Pipe, 2"	36.0000	LF	$41.92	$1,509.12
088	23.10900	Construct Water Service	1.0000	EA	$477.04	$477.04
089	23.11001	Abandonment of Water Main	1.0000	LS	$1,724.21	$1,724.21
090	24.01012	Rem Street Light Pole	4.0000	EA	$517.72	$2,070.88
091	24.01022	Rem Pull Box	3.0000	EA	$103.72	$311.16
092	24.03210	Conduit, 1", Trenched	1,850.0000	LF	$7.95	$14,707.50
093	24.03215	Conduit, 1 1/2", Trenched	17,650.0000	LF	$8.26	$145,789.00
094	24.03220	Conduit, 2", Trenched	4,462.0000	LF	$10.50	$46,851.00
095	24.03240	Conduit, 4", Trenched	2,918.0000	LF	$13.32	$38,867.76
096	24.04000	Locate Stick	2.0000	EA	$257.47	$514.94
097	24.11006	Cabinet, Inst, F	1.0000	EA	$1,743.52	$1,743.52
098	24.12100	Cable, Tracer Wire	4,351.0000	LF	$0.72	$3,132.72
099	24.12204	Cable, No 4 Circuit Ground	1,070.0000	LF	$2.76	$2,953.20
100	24.12206	Cable, No 6 Circuit Ground	3,690.0000	LF	$1.84	$6,789.60
101	24.12208	Cable, No 8 Circuit Ground	17,430.0000	LF	$1.72	$29,979.60
102	24.12502	Cable, No 2 Street Light	1,160.0000	LF	$2.61	$3,027.60
103	24.12504	Cable, No 4 Street Light	8,970.0000	LF	$2.28	$20,451.60
104	24.12506	Cable, No 6 Street Light	18,170.0000	LF	$1.84	$33,432.80
105	30.07005	Seeding, Ty "E"	2.1000	AC	$3,448.43	$7,241.70
106	30.08001	Sodding	453.0000	SF	$7.99	$3,619.47
107	31.03001	Select Topsoil	2,740.0000	CY	$22.59	$61,896.60
108	32.02001	Synthetic Fabric Silt Fence Inst	3,387.0000	LF	$2.82	$9,551.34
109	32.02002	Synthetic Fabric Silt Fence Maint	15,958.0000	LF	$1.15	$18,351.70
110	32.02003	Synthetic Fabric Silt Fence Rem	7,979.0000	LF	$0.57	$4,548.03
111	32.03001	Construction Entrance Surfacing	720.0000	TON	$24.00	$17,280.00
112	32.04001	Curb Inlet Protection Inst	8.0000	EA	$126.44	$1,011.52
113	32.04002	Curb Inlet Protection Maint	8.0000	EA	$57.48	$459.84
114	32.04003	Curb Inlet Protection Rem	8.0000	EA	$34.49	$275.92
115	32.05101	BD ECB, Type I	1,937.0000	SY	$1.83	$3,544.71
116	50.00001	Type I Curb Drop and Flume	13.0000	EA	$80.19	$1,042.47
117	50.00001	Type II Curb Drop and Flume	17.0000	EA	$80.22	$1,363.74
118	50.00001	Type III Curb Drop and Flume	57.0000	EA	$55.70	$3,174.90
119	50.00001	Removable Sign Post Attachment	10.0000	EA	$288.52	$2,885.20
120	50.00001	Reconstruct MH at Sta. 10+95.76	1.0000	EA	$1,627.05	$1,627.05
121	50.00001	Reconstruct MH at Sta.11+00.46	1.0000	EA	$1,668.89	$1,668.89
122	50.00001	Reconstruct MH at Sta. 11+42.21	1.0000	EA	$1,737.29	$1,737.29
123	50.00001	Reconstruct MH at Sta. 115+28.03	1.0000	EA	$1,230.36	$1,230.36
124	50.00001	Reconstruct MH at Sta. 115+45.72	1.0000	EA	$1,715.16	$1,715.16
125	50.00001	Reconstruct MH at Sta. 117+51.02	1.0000	EA	$809.69	$809.69
126	50.00001	Reconstruct MH at Sta. 122+65.23	1.0000	EA	$835.84	$835.84
127	50.00001	Reconstruct MH at Sta.123+58.30	1.0000	EA	$857.17	$857.17

128	50.00001	Reconstruct MH at Sta. 302+15.92	1.0000	EA	$2,279.61	$2,279.61
129	50.00001	Removable Bollard	3.0000	EA	$1,020.68	$3,062.04
130	50.00001	Steel Cover for Stage Foundation	6.0000	EA	$4,138.11	$24,828.66
131	50.00001	Ground Rod Assembly	4.0000	EA	$172.42	$689.68
132	0.00001	Chain Link Fence Cantilevered Gate, 22'-0" Wide	2.0000	EA	$2,069.06	$4,138.12
133	50.00001	Chain Link Fence Cantilevered Gate, 30'-0" Wide	1.0000	EA	$2,218.49	$2,218.49
134	50.00001	Chain Link Fence Double Swing Gate, 24'-0" Wide	6.0000	EA	$1,080.51	$6,483.06
135	50.00001	Chain Link Fence Gate, 3'-0" Wide, 72" Height	1.0000	EA	$344.85	$344.85
136	50.00001	Chain Link Fence Walk Gate, 3'-0" Wide, 96" Height	1.0000	EA	$413.81	$413.81
137	50.00001	Chain Link Fence Walk Gate, 6'-0", 96" Height	1.0000	EA	$568.99	$568.99
138	50.00001	Pothole Existing Utility	7.0000	EA	$241.39	$1,689.73
139	50.00001	Furnish Dewatering Container	1.0000	EA	$2,034.57	$2,034.57
140	50.00001	Petroleum Contaminated Soil Load Fee	100.0000	EA	$5.00	$500.00
141	50.00001	PVC Wye, 12"x4"	6.0000	EA	$279.30	$1,675.80
142	50.00001	Storm Sewer Cleanout	2.0000	EA	$637.90	$1,275.80
143	50.00001	Sewer Service Hatch Cover and Pad	9.0000	EA	$694.57	$6,251.13
144	50.00001	Yard Hydrant	9.0000	EA	$1,188.26	$10,694.34
145	50.00001	Curb Stop and Box	10.0000	EA	$314.06	$3,140.60
146	50.00001	Tap Water Service Pipe	9.0000	EA	$251.73	$2,265.57
147	50.00001	Deg Bend, MJ, 4"x45	2.0000	EA	$167.15	$334.30
148	50.00001	Switchboard Meter/Panel Assembly	1.0000	EA	$37,953.06	$37,953.06
149	50.00001	Anchor Meter Socket	1.0000	EA	$314.33	$314.33
150	50.00001	Utility Transformer Pad	1.0000	EA	$2,334.50	$2,334.50
151	50.00001	400A Company Switch	1.0000	EA	$8,219.69	$8,219.69
152	50.00001	200A Company Switch	1.0000	EA	$6,613.48	$6,613.48
153	50.00001	100A Company Switch	9.0000	EA	$5,643.55	$50,791.95
154	50.00001	Wall Heater	1.0000	EA	$459.61	$459.61
155	50.00001	Lighting Controls NEMA 3R Enclosure	1.0000	EA	$2,130.50	$2,130.50
156	50.00001	Company Switch Pole with 3' Concrete Base	5.0000	EA	$2,509.76	$12,548.80
157	50.00001	Lighting Unit Type "A"	16.0000	EA	$4,861.62	$77,785.92
158	50.00001	Lighting Unit Type "A1"	12.0000	EA	$5,064.12	$60,769.44
159	50.00001	Lighting Unit Type "B"	1.0000	EA	$6,615.13	$6,615.13
160	50.00001	Lighting Unit Type "C"	23.0000	EA	$4,920.99	$113,182.77
161	50.00001	Lighting Unit Type "D"	10.0000	EA	$6,615.11	$66,151.10
162	50.00001	Lighting Unit Type "D1"	5.0000	EA	$6,838.53	$34,192.65
163	50.00001	Lighting Unit Type "F"	3.0000	EA	$7,916.60	$23,749.80
164	50.00001	Lighting Unit Type "G"	5.0000	EA	$6,376.35	$31,881.75
165	50.00001	Lighting Unit Type "G1"	3.0000	EA	$5,537.03	$16,611.09
166	50.00001	Lighting Relay Panel	1.0000	EA	$3,139.52	$3,139.52
167	50.00001	Fiber Vault (30"x48"x36")	5.0000	EA	$1,346.59	$6,732.95
168	50.00001	Install Tracer Wire Pedestal	2.0000	EA	$321.49	$642.98
169	50.00001	Paint Mkg, Handicap Stall Symbol	23.0000	EA	$431.05	$9,914.15
170	50.00001	Expansion Bearing, TFE Type	18.0000	EA	$2,224.14	$40,034.52

171	50.00001	Fixed Bearing	6.0000	EA	$1,649.40	$9,896.40
172	50.00001	Portal Frame Mounting Anchors	84.0000	EA	$16.66	$1,399.44
173	50.00001	End Post Anchors	16.0000	EA	$16.66	$266.56
174	50.00001	Fence Lower Cable Anchors	226.0000	EA	$16.66	$3,765.16
175	50.00001	Seat Bracket Anchors	56.0000	EA	$16.66	$932.96
176	50.00005	PVC Pipe Sleeve, 2"	1,629.0000	LF	$1.81	$2,948.49
177	50.00005	PVC Pipe Sleeve, 4"	1,077.0000	LF	$3.16	$3,403.32
178	50.00005	Remove Fence	4,332.0000	LF	$0.86	$3,725.52
179	50.00005	Chain Link Fence, 96"	3,507.0000	LF	$17.18	$60,250.26
180	50.00005	Chain Link Construction Fence	866.0000	LF	$4.71	$4,078.86
181	50.00005	PVC Storm Sewer, 12"	430.0000	LF	$24.63	$10,590.90
182	50.00005	PVC Storm Sewer, 4"	195.0000	LF	$22.82	$4,449.90
183	50.00005	Install PVC Storm Sewer With Restained Jointe, 12"	163.0000	LF	$23.13	$3,770.19
184	50.00005	Dewateromg for Storm Sewers or Water Mains	1,000.0000	LF	$2.51	$2,510.00
185	50.00005	DIP Water Main, Class 52, 6"	86.0000	LF	$49.66	$4,270.76
186	50.00005	Wall Heater Cable, No. 12	30.0000	LF	$0.99	$29.70
187	50.00005	Wall Heater Cable, No. 12 CG	15.0000	LF	$0.99	$14.85
188	50.00005	Cable, No. 1 SC	1,740.0000	LF	$3.54	$6,159.60
189	50.00005	Cable, No. 1/0SC	1,060.0000	LF	$3.99	$4,229.40
190	50.00005	Cable, No. 2/0 SC	1,300.0000	LF	$4.73	$6,149.00
191	50.00005	Cable, No. 3/0 SC	3,840.0000	LF	$5.84	$22,425.60
192	50.00005	Cable, No. 4/0 SC	4,280.0000	LF	$6.75	$28,890.00
193	50.00005	Cable, No. 350 KCMIL SC	3,360.0000	LF	$10.38	$34,876.80
194	50.00005	Cable No. 1 Circuit Ground	840.0000	LF	$3.31	$2,780.40
195	50.00005	Conduit, 2 1/2", Trenched	1,070.0000	LF	$11.95	$12,786.50
196	50.00005	Conduit (2) Each 3", Trenched	420.0000	LF	$41.53	$17,442.60
197	50.00005	Conduit (5) Each 3 1/2" Trenched	5.0000	LF	$514.98	$2,574.90
198	50.00005	Conduit, (5) Each 3 1/2"	5.0000	LF	$608.89	$3,044.45
199	50.00005	Cable, No. 2 RC	4,680.0000	LF	$2.81	$13,150.80
200	50.00005	Cable, No. 4 RC	3,825.0000	LF	$2.68	$10,251.00
201	50.00005	Cable, No. 6 RC	4,320.0000	LF	$1.84	$7,948.80
202	50.00005	HP 12x53 Steel Piling	920.0000	LF	$32.30	$29,716.00
203	50.00005	HP 14/73 Steel Piling	5,760.0000	LF	$41.06	$236,505.60
204	50.00005	Deck Joint Seal, Type IV	46.0000	LF	$308.51	$14,191.46
205	50.00005	2" Conduit in Bridge	1,172.3300	LF	$18.16	$21,289.51
206	50.00005	3" Conduit in Bridge	1,390.3300	LF	$7.85	$10,914.09
207	50.00005	4" Conduit in Bridge	1,372.0000	LF	$35.10	$48,157.20
208	50.00010	Excavation for Beneficial Reuse	4,000.0000	CY	$9.49	$37,960.00
209	50.00010	Concrete for Stage Foundations	61.9000	CY	$392.49	$24,295.13
210	50.00010	Breakdown Foundations at Roundhouse	100.0000	CY	$171.85	$17,185.00
211	50.00010	Class 47B-4000 Concrete for Bridges	432.0000	CY	$286.63	$123,824.16
212	50.00010	Class 47BD-5000 Concrete for Bridges	706.0000	CY	$334.18	$235,931.08
213	50.00010	Conrete for Pavement Approaches Class 47 BD-4000	42.4000	CY	$233.22	$9,888.53

214	50.00010	Granular Backfill	85.0000	CY	$24.60	$2,091.00
215	50.00015	Extra Work Items	1.0000	LS	$500,000.00	$500,000.00
216	50.00015	Water Meter and Backflow Enclosures	1.0000	LS	$30,933.24	$30,933.24
217	50.00015	Abutment No. 1 Excavation	1.0000	LS	$2,528.51	$2,528.51
218	50.00015	Pier No., 1 Excavation	1.0000	LS	$14,463.09	$14,463.09
219	50.00015	Pier No. 2 Excavation	1.0000	LS	$27,016.73	$27,016.73
220	50.00015	Pier No. 3 Excavation	1.0000	LS	$5,838.94	$5,838.94
221	50.00015	Precast/Prestressed Post Tensioned Concrete Superstructure at Sta.	1.0000	LS	$811,701.01	$811,701.01
222	50.00015	Concrete Coating at Sta. 20+70.75	1.0000	LS	$38,576.43	$38,576.43
223	50.00015	Concrete Coating at Sta. 17+72.50	1.0000	LS	$4,632.43	$4,632.43
224	50.00020	Cover Crop Seeding	7.0800	AC	$798.88	$5,656.07
225	50.00025	Epoxy Coated Reinforcing Steel for Stage Foundations	8,659.0000	LBS	$0.92	$7,966.28
226	50.00025	Epoxy Coated Reinforcing Steel for Bridges	301,293.0000	LBS	$0.87	$262,124.91
227	50.00025	Epoxy Coated Reinforcing Steel for Pavement Approaches	7,335.0000	LBS	$0.87	$6,381.45
228	50.00025	Structural Steel for Substructure	12,664.0000	LBS	$1.88	$23,808.32
229	50.00025	Structural Steel for Superstructure	627.0000	LBS	$1.37	$858.99
230	50.00035	Construction and Demolition Waste	2,000.0000	TON	$17.70	$35,400.00
231	50.00035	Petroleum Contaminated Soils	3,000.0000	TON	$27.59	$82,770.00
232	50.00035	Occupation Tax	1,500.0000	TON	$7.00	$10,500.00
233	50.00040	Pervious Concrete Pavement	274.0000	SY	$69.22	$18,966.28
234	50.00040	Concrete Slope Protection	242.0000	SY	$48.15	$11,652.30
235	50.00040	Subsurface Drainage Matting	30.0000	SY	$27.02	$810.60
236	50.00045	Scour Stop	48.0000	SF	$16.16	$775.68
237	50.00045	Concrete Bikeway 5" (Colored)	4,018.0000	SF	$4.79	$19,246.22
238	50.00050	Construction Staking for Utilities	40.0000	HRS	$109.20	$4,368.00
239	50.00060	Dewatering Container Usage	200.0000	CDAY	$63.23	$12,646.00
240	50.00060	Dewatering for Grading Work and Structures	100.0000	CDAY	$57.48	$5,748.00
241	24.03230	Conduit, 3", Trenched	600.0000	LF	$11.73	$7,038.00
242	24.05009	Pull Box, T9	1.0000	EA	$655.19	$655.19
243	50.00035	Granular Material for Subgrade Stabilization	4,200.0000	TON	$21.78	$91,476.00
244	50.00040	Geogrid	5,000.0000	SY	$2.13	$10,650.00
245	50.00040	Site Grading	35,000.0000	SY	$0.69	$24,150.00
246	50.00005	PVC Storm Sewer, 8"	5.0000	LF	$96.32	$481.60

$7,270,489.12

EXHIBIT B

Intentionally Omitted

EXHIBIT C

Construction and Maintenance Agreement
Between BNSF and the City of Lincoln

Approved by Law
12-6-2012

A- 86070

CONSTRUCTION AND MAINTENANCE AGREEMENT

THIS CONSTRUCTION AND MAINTENANCE AGREEMENT ("**C&M Agreement**") is made to be *effective the 18th day of October, 2010* ("***Effective Date***"), *by and between* **BNSF RAILWAY COMPANY**, a Delaware corporation ("**BNSF**"), and the **CITY OF LINCOLN, NEBRASKA**, a Nebraska municipal corporation ("**City**"). City and BNSF, respectively, are sometimes referred to in this C&M Agreement each as a "**Party**" and collectively, as the "**Parties**".

RECITALS

A. BNSF owns and operates a line of railroad in and through the City of Lincoln, State of Nebraska

B In an effort to strengthen the long-term economic and physical viability of the West Haymarket District and Downtown Lincoln, City plans to construct entertainment, recreation, lodging, offices, retail and/or other complementary and/or supporting facilities (collectively, the "**West Haymarket Project**") in the area shown on the map attached hereto as **Exhibit A** and incorporated herein by reference ("**Project Area**") The West Haymarket Project will include, among other things, an approximately 16,000-seat arena (the "**Arena**"), an ice center facility (the "**Ice Center**"), a district energy facility, and upgrades to parking, utilities, and surface transportation access to the area.

C. City and BNSF have entered into that certain Master Development Agreement of even date *herewith (the "**Master Agreement**"). In connection with certain economic development objectives of City* as set forth in the Master Agreement, City desires that BNSF grant certain permanent or temporary license and/or easement rights to City and certain third parties (each a "**Right of Entry**" and, in multiples, "**Rights of Entry**") for certain activities on BNSF's Property (defined below) (each a "**Right of Entry Work**" and collectively, "**Rights of Entry Work**"). For the purposes of this C&M Agreement, the term "BNSF's Property" shall mean the applicable Existing BNSF Property, Retained BNSF Property, and/or Replacement BNSF Property which is under BNSF ownership at the time work is done under the Right of Entry. All capitalized terms not defined herein shall have the same meaning as in the Master Agreement.

AGREEMENTS

NOW, THEREFORE, in consideration of the mutual covenants and agreements of the Parties contained herein, the receipt and sufficiency of which are hereby acknowledged, the Parties agree as follows.

ARTICLE I – CITY C&M WORK. The provisions of this C&M Agreement, in addition to and not in limitation of the provisions contained in the applicable Rights of Entry, shall apply with respect to the Rights of Entry Work and any other construction, maintenance, Operation (as defined in the Master Agreement), or other work being performed on or adjacent to BNSF property by or for City (collectively, the "**City C&M Work**"). In the event of conflicts between the terms of this C&M Agreement and any applicable Right of Entry agreement, the most restrictive provisions shall apply to City.

ARTICLE II – BNSF OBLIGATIONS. In consideration of the covenants of City set forth herein and the faithful performance thereof, BNSF agrees to do the following:

2.1 Grant to City the following temporary Rights of Entry in accordance with and as described in Section 3.2 of the Master Agreement:

2.1.1 The Temporary Access License for Initial Construction as defined and described in Section 3.2.1 of the Master Agreement and attached thereto as Exhibit EE;

2.1.2 The Temporary Grading License for Storm Water Mitigation as defined and described in Section 3.2.2(a) of the Master Agreement and attached thereto as Exhibit FF-1;

2.1.3 The Temporary Access License for Soil Staging as defined and described in Section 3.2.3 of the Master Agreement and attached thereto as Exhibit GG;

2.1.4 The Temporary Access License for Construction Staging - Pedestrian Bridge as defined and described in Section 3.2.4(a) of the Master Agreement and attached thereto as Exhibit HH-1;

2.1.5 The Temporary Access License for Amtrak Work as defined and described in Section 3.2.5 of the Master Agreement and attached thereto as Exhibit II;

2.1.6 The Temporary Grading License for Arena Drive and Parking Lot Construction as defined and described in Section 3.2.9 of the Master Agreement and attached thereto as Exhibit KK;

2.1.7 The Temporary Access License for Survey / Geotech / Environmental Activities as defined and described in Section 3.2.11(a) of the Master Agreement and attached thereto as Exhibit BB;

2.1.8 The Crossing Agreements as defined and described in Section 3.2.12 of the Master Agreement and attached thereto as Exhibit UU.

2.1.9 The Temporary Construction and Access License for Sanitary Sewer Work as defined and described in Section 3.2.11(b) of the Master Agreement and attached thereto as Exhibit BB-1.

2.2 Grant to City the following permanent Rights of Entry in accordance with and as described in Section 3.2 of the Master Agreement:

2.2.1 The Storm Water Mitigation Easement as defined and described in Section 3.2.2(b) of the Master Agreement and attached thereto as Exhibit FF;

2.2.2 The Pedestrian Bridge Easement as defined and described in Section 3.2.4(b) of the Master Agreement and attached thereto as Exhibit HH; and

2.2.3 The City Utility Easements as defined and described in Section 3.2.7 of the Master Agreement and attached thereto as Exhibit TT and Exhibit TT-1.

2.2.4 The 2nd & J Utility Easement as defined and described in Section 3.2.10 of the Master Agreement and attached thereto as Exhibit TT.

2.3 Grant to City the Security Fencing License in accordance with and as defined and described in Section 3.2.8 of the Master Agreement and attached thereto as Exhibit JJ.

ARTICLE III – CITY OBLIGATIONS

3.1 Plans.

3.1.1 If any City C&M Work is not included in the City Work Final Design (as defined in the Master Agreement), City must furnish to BNSF four sets of plans and specifications for such City C&M Work (reduced size 11" x 17"), together with two copies of calculations, and two copies of specifications in **English Units**, for approval prior to commencement of any construction. For each set of such plans and specifications submitted by City to BNSF, BNSF shall approve or reject such plans and specifications within thirty (30) days after BNSF's receipt thereof and, if rejected, the reasons for such rejection shall be set forth in reasonable detail. Corrected plans and specifications shall be approved or rejected in the manner hereinbefore provided. BNSF will give City final written approval of the plans and specifications substantially in the form of **Exhibit B**, attached hereto and incorporated herein by reference. Upon BNSF's final written approval of the plans and specifications (the "**Approved Plans**"), the Approved Plans will

become part of this C&M Agreement and incorporated herein. Any approval of the Approved Plans by BNSF shall in no way obligate BNSF in any manner with respect to the finished product design and/or construction. Any approval by BNSF shall mean only that the Approved Plans meet the subjective standards of BNSF, and such approval by BNSF shall not be deemed to mean that the Approved Plans or construction is structurally sound and appropriate or that the Approved Plans meet applicable regulations, laws, statutes or local ordinances and/or building codes.

3.1.2 City must provide for and maintain minimum vertical and horizontal clearances, as required in the Contractor Requirements in **Exhibit C**, attached hereto and incorporated herein by reference, and as approved by BNSF as part of the City Work Final Design or any other Approved Plans.

3.1.3 Prior to the start of any segment of City C&M Work on or affecting BNSF's property, City must provide to BNSF, and BNSF must approve, exact minimum vertical and horizontal clearances for such segment of City C&M Work being constructed pursuant to the City Work Final Design. Upon BNSF's approval of each segment of City C&M Work, BNSF and City agree to execute an amendment to this C&M Agreement incorporating the approved clearances into this C&M Agreement as **Exhibit D** ("**Final Clearances**"). City shall not deviate from the Final Clearances for the applicable segment of City C&M Work without the prior written approval of BNSF.

3.1.4 City or its contractor(s) must submit four (4) copies of any plans (including two sets of calculations in **English Units**) for proposed shoring, falsework or cribbing to be used over, under, or adjacent to BNSF's tracks to BNSF's Project Engineer (defined below) for approval. The shoring, falsework or cribbing used by City Contractors (defined below) shall comply with all applicable requirements *promulgated by state and federal agencies, departments, commissions and other legislative bodies.*

3.1.5 (a) For purposes of notices required under this C&M to be made to BNSF's Project Engineer, Division Engineer, Manager Signal, and Director Engineering Services, the following contact information is in effect at the Effective Date:

(i) BNSF's "**Project Engineer**" is:

Gerald Maczuga
Gerald.Maczuga@BNSF.com
402-458-7537 (office)
206-265-2427 (cell)
402-458-4376 (fax)

(ii) BNSF's "**Division Engineer**" is:

Andrew Shearer
Andrew.Shearer@BNSF.com
402-458-7724 (office)

(iii) BNSF's "**Manager Signal**" is:

Mike Koetter
Michael.Koetter@BNSF.com
402-458-7504 (office)
402-458-7590 (fax)

(iv) BNSF's "***Director Engineering Services***" is:

Tom Schmidt
Thomas.Schmidt@BNSF.com
913-551-4330 (office)

(b) The contact information in **Section 3.1.5(a)** may be changed from time to time in accordance with the notice provisions of **Section 4.6** below.

3.2 Additional City Requirements.

3.2.1 City must supervise and inspect the operations of all City Contractors to assure compliance with the City Work Final Design and all other Approved Plans, the terms of this C&M Agreement and all communicated and applicable safety requirements of BNSF.

3.2.2 City must make any required applications and obtain all required permits and approvals for the City C&M Work.

3.2.3 City must acquire all rights of way necessary for the City C&M Work.

3.2.4 City must furnish all labor, materials, tools and equipment for the performance of the City C&M Work.

3.2.5 City must advise BNSF's Project Engineer in writing of: (i) the completion date of each Right of Entry Work within thirty (30) days after each such completion date and (ii) the date on which City and/or City Contractor will meet with BNSF for the purpose of making final inspection of each Right of Entry Work.

3.2.6 City must notify and obtain prior authorization from BNSF's Project Engineer before entering BNSF's right-of-way for inspection, construction, maintenance, or any other purposes. Prior to performing any inspection, construction or maintenance with its own personnel, City shall: comply with all of BNSF's communicated and applicable safety rules and regulations; require any City employee performing maintenance to complete the safety training program at the Website "contractororientation.com"; notify BNSF when, pursuant to the requirements of **Exhibit C** or **Section 3.3.6** below, flaggers are required to be present; and procure, and have approved by BNSF's Risk Management Department, Railroad Protective Liability insurance.

3.2.7 City agrees to reimburse BNSF for work of an emergency nature caused by City or City Contractors in connection with the City C&M Work which BNSF deems is reasonably necessary for the immediate restoration of railroad operations, or for the protection of persons or BNSF property. Such emergency work may be performed by BNSF without prior approval of City and City agrees to fully reimburse BNSF for all such work.

3.2.8 The City C&M Work must be performed by City or City Contractors in a manner that will not endanger or interfere with the safe and timely operations of BNSF and its facilities.

3.2.9 City must include the following provisions in any contract with City Contractors:

3.2.9.1 City Contractor is placed on notice that fiber optic, communication and other cable lines and systems (collectively, the "**Lines**") owned by various telecommunications companies may be buried on BNSF's property or right-of-way. The locations of these Lines have been included on the plans based on information from the telecommunications companies. City Contractor will be responsible for contacting BNSF's Project Engineer, BNSF's Manager Signal, and the telecommunications companies and notifying them of any work that may damage these Lines or facilities and/or interfere with their service. City Contractor must also mark all Lines shown on the plans or marked in the field in order to verify their locations. City Contractor must also use all reasonable methods when working in the BNSF right-of-way or on BNSF property to determine if any other Lines (fiber optic, cable, communication or otherwise) may exist.

3.2.9.2 City Contractor will be responsible for the rearrangement of any facilities or Lines determined to interfere with the City C&M Work. City Contractor must cooperate fully with any telecommunications company(ies) in performing such rearrangements.

3.2.9.3 Failure to mark or identify these Lines will be sufficient cause for BNSF's Project Engineer to stop all or any part of the City C&M Work at no cost to City or BNSF until these items are completed.

3.2.9.4 All City C&M Work performed within the limits of BNSF's right-of-way must be performed in a good and workmanlike manner in accordance with plans and specifications approved by BNSF.

3.2.9.5 Changes or modifications during the City C&M Work that affect safety or BNSF operations must be subject to BNSF's approval.

3.2.9.6 No work will be commenced within BNSF's right-of-way until each of the prime contractors employed in connection with the City C&M Work have (i) executed and delivered to BNSF a letter agreement in the form of **Exhibit C-1(A)** attached hereto and incorporated herein by reference, and (ii) delivered to and secured BNSF's approval of the required insurance.

3.2.9.7 Notwithstanding the provisions of **Section 3.2.9.6** above, solely for the temporary Rights of Entry described in **Sections 2.1.1**, **2.1.3**, **2.1.4**, and **2.1.5** above, no work will be commenced within BNSF's right-of-way until each of the prime contractors employed in connection with the City C&M Work under the referenced temporary Rights of Entry have (i) executed and delivered to BNSF a letter agreement in the form of **Exhibit C-1(B)** attached hereto and incorporated herein by reference, and (ii) delivered to and secured BNSF's approval of the required insurance.

3.2.9.8 To facilitate scheduling for the City C&M Work, City Contractors shall give BNSF's Project Engineer eight (8) weeks' advance notice of the proposed times and dates for work windows, except in case of emergency, in which event City Contractors must notify BNSF's Project Engineer by telephone at (402) 458-7537 as soon as practicable and shall promptly thereafter follow up with written notice to BNSF's Project Engineer at City Contractor's earliest opportunity. Notwithstanding the foregoing, in no event shall City or any City Contractors enter onto BNSF's property prior to receiving written approval for such entry from BNSF's Project Engineer. BNSF and the City Contractors will establish mutually agreeable work windows for the City C&M Work. BNSF has the right at any time to revise or change the work windows, due to train operations or service obligations. BNSF will not be responsible for any additional costs and expenses resulting from a change in work windows. Additional costs and expenses resulting from a change in work windows shall be accounted for in the contractor's expenses for the City C&M Work.

3.3 Construction and Contractor Requirements.

3.3.1 Contractor Requirements. For the City C&M Work, City must comply, and cause all of its contractors (each a "**City Contractor**", and collectively the "**City Contractors**") to comply, with the obligations set forth in **Exhibit C** attached hereto and incorporated herein by reference, and cause all City Contractor(s) for such work to execute and deliver a Contractor Right of Entry ("**CROE**") in the form of **Exhibit C-1(A)** or **Exhibit C-1(B)**, as applicable. In addition, all City C&M Work must comply with all of the following requirements:

3.3.2 Standards. All City C&M Work must performed (i) in a good and workmanlike manner, (ii) in accordance with the applicable City Work Final Design or other Approved Plans, (iii) in conformance with applicable building codes and all applicable engineering, safety and any and all laws, statutes, regulations, ordinances, orders, covenants, restrictions, or decisions of any court of competent jurisdiction ("**Legal Requirements**"), (iv) in accordance with the accepted industry standards of care, skill and diligence, and (v) in such a manner as shall not adversely affect the structural integrity or maintenance of any BNSF improvements or other improvements on or near BNSF property, or any lateral support of any structures adjacent to or in the proximity of any BNSF improvements or BNSF property. In addition, each

portion of the City C&M Work must be promptly commenced by the Party obligated hereunder to perform the same and thereafter diligently prosecuted to conclusion in its logical order and sequence. Furthermore, any changes or modifications of the City C&M Work which affect BNSF will be subject to BNSF's written approval prior to the commencement of any such changes or modifications from BNSF's Project Engineer.

3.3.3 Site Cleanup and Restoration. City shall be responsible for all job site cleanup and restoration, including removal of all construction materials, concrete debris, surplus soil, refuse, *contaminated soils, asphalt debris, litter and other waste materials resulting from the City C&M Work to the* reasonable satisfaction of BNSF's Division Engineer.

3.3.4 Safety/Security.

3.3.4.1 During the City C&M Work, City, at City's sole cost, shall perform all activities and work in such a manner as to preclude personal injury or property damage to BNSF or any other party, and shall ensure that there is no interference with the railroad operations or other activities of BNSF, or anyone present on BNSF's property with the authority or permission of BNSF. City shall not disturb any improvements of BNSF or BNSF's existing lessees, licensees, license beneficiaries or lien holders, if any, or interfere with the use of such improvements, except as permitted by **Section 3.3.5** below.

3.3.4.2 Prior to entering BNSF's property to perform the City C&M Work, City shall *cause all City Contractor(s) to comply with all of BNSF's communicated and applicable safety and security* rules and regulations and complete the safety training program at the Website "www.contractororientation.com" or then-current program designated by BNSF (the "**Safety Orientation**") and eRAILSAFE or then-current security program designated by BNSF (the "**Security Orientation**") within one year prior to entering upon BNSF's property. Additionally, City must ensure that each and every employee of all City Contractors possess a card certifying completion of the Safety Orientation and the Security Orientation prior to entering upon BNSF's property. City must renew the Safety Orientation and Security Orientation annually.

3.3.4.3 City must supervise and inspect the activities of all City Contractors entering onto BNSF's property to perform the City C&M Work, and assure compliance with the applicable Approved Plans, the terms of this C&M Agreement, and all communicated and applicable safety requirements of BNSF. BNSF will have the right to stop work if any of the following events take place: (i) If BNSF determines that proper supervision and inspection are not being performed by City at any time during the City C&M Work, (ii) any City Contractor performs any work in a manner contrary to the applicable Approved Plans; (iii) any City Contractor, in BNSF's opinion, prosecutes its work in a manner which is hazardous to BNSF property, facilities, personnel, or the safe and expeditious movement of railroad traffic; or (iv) the insurance described herein or in **Exhibit C-1(A)** or **Exhibit C-1(B)**, as applicable, is canceled or expires. The work stoppage will continue until all necessary actions are taken by City to rectify the situation to the satisfaction of BNSF's Division Engineer or until additional insurance has been delivered to and accepted by BNSF. Any such work stoppage under this provision will not give rise to any liability on the part of BNSF. BNSF's right to stop the work is in addition to any other rights BNSF may have under this C&M Agreement or an applicable Right of Entry. In the event that BNSF desires to stop work, BNSF agrees to immediately notify City. Notwithstanding the foregoing, BNSF has no duty or obligation to observe or inspect, or to halt work by any City Contractor on BNSF's property, it being solely City's responsibility to ensure that work performed by any City Contractor is conducted in compliance with *the terms of this C&M Agreement, all Legal Requirements and the applicable Approved Plans.*

3.3.5 Disturbance of Improvements. City will be responsible at no cost to BNSF to locate and make any adjustments necessary to any wire lines, pipe lines, or other utilities, fences, buildings, improvements or other facilities located within BNSF's property (collectively, "**Other Improvements**"). City must contact the owner(s) of the Other Improvements notifying them of any work that may damage these Other Improvements and/or interfere with their service and, if required, obtain the owner's written approval prior to so affecting the Other Improvements. City must mark all BNSF improvements and Other Improvements on the applicable Approved Plans and mark all BNSF improvements and Other Improvements in the field in order to verify their locations. City must also use all reasonable methods when working on or near BNSF's property to determine if any BNSF improvements or

Other Improvements (fiber optic, cable, communication or otherwise) may exist. Failure to mark or identify any BNSF improvements or Other Improvements will be sufficient cause for BNSF to stop construction at no cost to BNSF until such items are completed. City must make all adjustments and other work described in this **Section 3.3.5**, including without limitation adjustments to Other Improvements and work on and affecting BNSF property, in a manner that does not adversely impact utility service to BNSF. City shall use commercially reasonable efforts to cause, at its expense, any utilities for its operations to be separately metered from utilities serving BNSF's operations by the date set forth on the Timeline (as defined in the Master Agreement).

3.3.6 Flagging. Subject to modification in writing by BNSF's Division Engineer, no City Contractor shall conduct any activities on, or be present on, any portion of BNSF's property that is within twenty-five (25) feet of any active railroad track or where any such activities have the potential to foul any active railroad track, except in the presence of a flagger. In addition to and not in limitation of the foregoing, City shall, and shall cause its City Contractors to, comply with all BNSF requirements concerning flagging, including without limitation the provisions of Section 1.05 of **Exhibit C**. BNSF shall arrange for the presence of flaggers as soon as practicable after receipt of notice from City in accordance with Section 1.05.01 of **Exhibit C**; provided, however, BNSF shall not be held responsible for City delays when flaggers are not available.

3.3.7 Flagging Costs. Flagging costs of the Included BNSF Work (as defined in the Master Agreement) are the responsibility of BNSF to the extent described in Section 2.2(i) of the Master Agreement. All other flagging costs, including without limitation flagging costs for City C&M Work, BNSF Additional Cost Work and any other work that is or becomes a part of the West Haymarket Project, shall be at City's cost and expense; provided, however, to the extent BNSF is performing work requiring flagging that is the responsibility of BNSF (under the first sentence of this **Section 3.3.7**) at the same time and in the same location as the City C&M Work, BNSF Additional Cost Work and/or any other work that is or becomes a part of the West Haymarket Project, such flagging costs and expenses shall be deemed to be part of the Included BNSF Work. Notwithstanding the foregoing, however, if the City C&M Work, BNSF Additional Cost Work or any other work that is or becomes part of the West Haymarket Project is of such magnitude that additional flaggers or additional flagging time is required, then City shall be responsible for all flagging costs and expenses for such incremental flaggers and additional flagging time as BNSF Additional City Cost Work. As further described in Section 1.05.03c of **Exhibit C**, the governmental flagging rate in effect at the time of performance by the flaggers will be used to calculate flagging costs. As more particularly described in Section 2.7.2 of the Master Agreement and also in the Escrow Agreement (as defined in the Master Agreement), City shall deposit additional amounts, including amounts for estimated flagging costs, into escrow for BNSF Additional City Cost Work.

3.3.8 No Unauthorized Tests or Digging. No City Contractor shall conduct any tests, investigations or any other activity using mechanized equipment and/or machinery, or place or store any mechanized equipment, tools or other materials, within twenty-five (25) feet of the centerline of any railroad track on BNSF's property, except after City has obtained written approval from BNSF Director Engineering Services, and then only in strict accordance with the terms and any conditions of such approval.

3.3.9 Drainage. Any and all cuts and fills, excavations or embankments as part of the City C&M Work shall be deemed to be a part of the City C&M Work and shall be made by City in such manner, form and to the extent as will provide adequate drainage of and from BNSF's property and any adjoining BNSF right of way. Wherever any such fill or embankment shall or may obstruct the natural and pre-existing drainage from either or both BNSF's property and BNSF's adjoining right of way, City shall construct such culverts or drains to preserve such natural and pre-existing drainage, and such culverts or drains shall also be deemed to be a part of the City C&M Work. City shall wherever necessary with respect to the City C&M Work, construct extensions of existing drains, culverts or ditches through or along BNSF's property (which extensions will also be deemed to be a part of the City C&M Work), such extensions to be of adequate sectional dimensions to preserve flowage of drainage or other waters, and/or material and workmanship equally as good as those now existing.

3.3.10 Liens. City shall promptly pay and discharge any and all liens arising out of any construction done, suffered or permitted to be done by City. BNSF is hereby authorized to post any notices

or take any other action upon or with respect to BNSF's property that is or may be permitted by Legal Requirements to prevent the attachment of any such liens to any portion of BNSF's property; provided, however, that failure of BNSF to take any such action shall not relieve City of any obligation or liability under this Section or any other section of this C&M Agreement. City shall include in its contracts with all City Contractors, and require all contractors performing any work on BNSF's property or providing materials to include in their contracts with their subcontractors, a notice and acknowledgement by the party providing work or materials that BNSF is not liable for any amounts due such contractor or contractors and waiving any right to place a lien on BNSF's property.

3.4 Environmental Compliance and Notification.

3.4.1 Compliance with Environmental Laws. City shall cause its contractors and employees to strictly comply with all federal, state and local environmental laws and regulations in its use of BNSF's property, including, but not limited to, the Resource Conservation and Recovery Act, as amended (RCRA), the Clean Water Act, the Oil Pollution Act, the Hazardous Materials Transportation Act, CERCLA (collectively, the "**Environmental Laws**") with respect to the BNSF property. City and its contractors, if any, shall not maintain a "treatment," "storage," "transfer" or "disposal" facility, or "underground storage tank," as those terms are defined by Environmental Laws, on BNSF's property. City and its contractors, if any, shall not handle, transport, release or suffer the release of "hazardous waste" or "hazardous substances", as "hazardous waste" and "hazardous substances" may now or in the future be defined by any Environmental Laws, except as may be pre-existing in BNSF's property and as encountered in the City C&M Work and then only in compliance with Environmental Laws and the SMP (defined below), and shall not use any soils or other materials containing hazardous waste or hazardous substances in connection with the City C&M Work, or otherwise bring any hazardous waste or hazardous substances onto any BNSF property.

3.4.2 Notice of Release. City shall give BNSF immediate notice to BNSF's Resource Operations Center at (800) 832-5452 in the event of any release of hazardous substances on or from BNSF's property, violation of Environmental Laws, or inspection or inquiry by governmental authorities charged with enforcing Environmental Laws with respect to City's use of BNSF's property. City shall use best efforts to promptly respond to any release arising from or related to its activities contemplated in this C&M Agreement only in compliance with Environmental Laws and the SMP. City shall also give BNSF notice of all measures undertaken on City's behalf to investigate, remediate, respond to or otherwise cure such release or violation.

3.4.3 Remediation of Release. In the event City has notice of a release or violation of Environmental Laws which occurred or may occur as a result of City's activities contemplated in this C&M Agreement, City shall take timely measures to investigate, remediate, respond to or otherwise cure as required by applicable law such release or violation affecting BNSF's property or improvements. If during the City C&M Work, soils or other materials considered to be environmentally contaminated are exposed, City will remove and safely dispose of said contaminated soils only in compliance with Environmental Laws and the SMP. Determination of soils contamination and applicable disposal procedures thereof will be made only by an agency having the capacity and authority to make such a determination.

3.4.4 Evidence of Compliance. City agrees to periodically to furnish BNSF upon written request with reasonable proof that it is in compliance with this **Article III, Section 3.4**.

3.4.5 Soil Management Plan. In addition to the other obligations of City and City Contractors as set forth herein, including but not limited to the provisions of **Exhibit C** and, as applicable, **Exhibit C-1(A)** or **Exhibit C-1(B)**, the Soil Management Plan attached hereto as **Exhibit E** ("**SMP**") sets forth additional obligations of City and BNSF with respect to the proper management of impacted environmental media during the Development Period (as defined in the Master Agreement).

3.5 Timing.

3.5.1 City will use commercially reasonable efforts to perform all City C&M Work in accordance with the Timeline.

3.5.2 BNSF and City mutually agree that no construction activities for the City C&M Work, nor future maintenance of any improvements which have a reasonable likelihood to delay train traffic on BNSF's main lines, will be permitted during the fourth quarter of each calendar year. Emergency work will be permitted only upon prior notification to BNSF's Network Operations Center (telephone number: 800 832-5452). BNSF and City mutually understand and agree that trains cannot be subjected to delay during this time period.

3.6 Indemnifications.

3.6.1 **TO THE FULLEST EXTENT PERMITTED BY LAW, CITY SHALL, AND SHALL CAUSE CITY'S CONTRACTORS TO, RELEASE, INDEMNIFY, DEFEND AND HOLD HARMLESS BNSF *AND BNSF'S AFFILIATED COMPANIES, PARTNERS, SUCCESSORS, ASSIGNS, LEGAL* REPRESENTATIVES, OFFICERS, DIRECTORS, SHAREHOLDERS, EMPLOYEES AND AGENTS FOR, FROM AND AGAINST ANY AND ALL CLAIMS, LIABILITIES, FINES, PENALTIES, COSTS, DAMAGES, LOSSES, LIENS, CAUSES OF ACTION, SUITS, DEMANDS, JUDGMENTS AND EXPENSES (INCLUDING, WITHOUT LIMITATION, COURT COSTS AND ATTORNEYS' FEES) OF ANY NATURE, KIND OR DESCRIPTION OF ANY PERSON (INCLUDING, WITHOUT LIMITATION, THE EMPLOYEES OF THE PARTIES HERETO) OR ENTITY DIRECTLY OR INDIRECTLY (COLLECTIVELY, "LIABILITIES") ARISING OUT OF, RESULTING FROM OR CAUSALLY RELATED TO (IN WHOLE OR IN PART):**

(i) **ANY RIGHTS OR INTERESTS GRANTED TO CITY OR ANY CITY PARTY (DEFINED BELOW) PURSUANT TO THIS C&M AGREEMENT, THE RIGHTS OF ENTRY, OR THE LICENSES AND/OR EASEMENTS GRANTED TO CITY PURSUANT TO THIS C&M AGREEMENT;**

(ii) **THE USE, OCCUPANCY OR PRESENCE OF CITY AND/OR CITY CONTRACTORS AND THEIR RESPECTIVE SUBCONTRACTORS, EMPLOYEES OR AGENTS (SUCH CITY CONTRACTORS, SUBCONTRACTORS, EMPLOYEES AND AGENTS BEING REFERRED TO INDIVIDUALLY AS A "CITY PARTY" AND COLLECTIVELY, THE "CITY PARTIES") AND/OR ANY *WORK PERFORMED BY CITY OR ANY CITY PARTY IN, ON, OR ABOUT BNSF'S PROPERTY OR* RIGHT-OF-WAY AND/OR THE WEST HAYMARKET PROJECT, INCLUDING, WITHOUT LIMITATION, OPERATION OF THE PEDESTRIAN BRIDGE, SECURITY FENCING (AS DEFINED IN THE MASTER AGREEMENT), OR STORM WATER MITIGATION (AS DEFINED IN THE MASTER AGREEMENT) BY CITY;**

(iii) **ANY ENVIRONMENTAL MATTERS ARISING FROM THE WEST HAYMARKET PROJECT AND/OR AFFECTING THE PROJECT AREA OR ANY PROPERTY ADJACENT THERETO;**

(iv) **ANY AND ALL CLAIMS BROUGHT BY ANY PARTY RELATED TO OR ARISING FROM THE ACQUISITION AND/OR DEVELOPMENT OF ANY AND ALL PROPERTY AS PART OF THE WEST HAYMARKET PROJECT, INCLUDING WITHOUT LIMITATION PROPERTY DESCRIBED IN THIS C&M AGREEMENT, THE MASTER AGREEMENT, THE EXCHANGE AGREEMENT, AND/OR THE RIGHTS OF ENTRY AGREEMENTS;**

(v) **THE CONDITION OF THE REPLACEMENT BNSF PROPERTY, INCLUDING WITHOUT LIMITATION ANY AND ALL CLAIMS RELATED TO OR ARISING FROM THE EXISTENCE OF ANY THIRD PARTY RESERVED RIGHTS AND/OR ANY THIRD PARTY'S EXERCISE OF ITS RESERVED RIGHTS;**

(vi) **ANY DAMAGE TO OR DESTRUCTION OF ANY TELECOMMUNICATION LINES IN CONNECTION WITH THE WEST HAYMARKET PROJECT BY CITY OR ANY CITY PARTY, INCLUDING BUT NOT LIMITED TO (A) ANY INJURY TO OR DEATH OF ANY PERSON EMPLOYED BY OR ON BEHALF OF ANY TELECOMMUNICATIONS COMPANY, AND/OR ITS CONTRACTORS, AGENTS AND/OR EMPLOYEES AS A RESULT OF SUCH DAMAGE OR DESTRUCTION, AND/OR (B) ANY CLAIM OR CAUSE OF ACTION FOR ALLEGED LOSS OF PROFITS**

OR REVENUE BY, OR LOSS OF SERVICE BY A CUSTOMER OR USER OF SUCH TELECOMMUNICATION COMPANY(IES) AS A RESULT OF SUCH DAMAGE OR DESTRUCTION;

(vii) **CITY'S OR ANY CITY PARTY'S BREACH OF THE TERMS AND CONDITIONS OF THIS C&M AGREEMENT, THE RIGHTS OF ENTRY, OR THE LICENSES AND/OR EASEMENTS GRANTED TO CITY PURSUANT TO THE MASTER AGREEMENT;**

(viii) **ANY ACT OR OMISSION OF CITY OR ITS OFFICERS, AGENTS, INVITEES, EMPLOYEES OR CONTRACTORS, OR A CITY PARTY, OR ANYONE DIRECTLY OR INDIRECTLY EMPLOYED BY ANY OF THEM, OR ANYONE THEY CONTROL OR EXERCISE CONTROL OVER.**

THE LIABILITY ASSUMED BY CITY AND THE CITY CONTRACTORS WILL NOT BE AFFECTED BY THE FACT, IF IT IS A FACT, THAT ANY DAMAGE, DESTRUCTION, INJURY OR DEATH WAS OCCASIONED BY OR CONTRIBUTED TO BY THE NEGLIGENCE OF BNSF, ITS AGENTS, SERVANTS, EMPLOYEES OR OTHERWISE, BUT EXCLUDING CLAIMS WHOLLY CAUSED BY BNSF'S SOLE NEGLIGENCE AND EXCLUDING CLAIMS TO THE EXTENT THAT SUCH CLAIMS ARE CAUSED BY THE WILLFUL MISCONDUCT OR GROSS NEGLIGENCE OF BNSF.

3.6.2 **FURTHER, TO THE FULLEST EXTENT PERMITTED BY LAW, CITY SHALL, AND SHALL CAUSE CITY'S CONTRACTORS TO, NOW AND FOREVER WAIVE ANY AND ALL CLAIMS, REGARDLESS OF WHETHER SUCH CLAIMS ARE BASED ON STRICT LIABILITY, NEGLIGENCE OR OTHERWISE, THAT BNSF IS AN "OWNER", "OPERATOR", "ARRANGER", OR "TRANSPORTER" WITH RESPECT TO THE EXCHANGE PROPERTIES (AS DEFINED IN THE EXCHANGE AGREEMENT), OR THE WEST HAYMARKET PROJECT AND/OR THE PROJECT AREA OR ANY PROPERTY ADJACENT THERETO, FOR THE PURPOSES OF CERCLA OR OTHER ENVIRONMENTAL LAWS. CITY WILL, AND WILL CAUSE CITY'S CONTRACTORS TO, INDEMNIFY, DEFEND AND HOLD BNSF HARMLESS FROM ANY AND ALL SUCH CLAIMS REGARDLESS OF THE NEGLIGENCE OF BNSF. CITY FURTHER AGREES THAT THE USE OF THE EXCHANGE PROPERTIES, OR THE WEST HAYMARKET PROJECT AND/OR THE PROJECT AREA OR ANY PROPERTY ADJACENT THERETO, AS CONTEMPLATED BY THIS C&M AGREEMENT SHALL NOT IN ANY WAY SUBJECT BNSF TO CLAIMS THAT BNSF IS OTHER THAN A COMMON CARRIER FOR PURPOSES OF ENVIRONMENTAL LAWS AND EXPRESSLY AGREES TO INDEMNIFY, DEFEND, AND HOLD BNSF HARMLESS FOR ANY AND ALL SUCH CLAIMS. IN NO EVENT SHALL BNSF BE RESPONSIBLE FOR THE ENVIRONMENTAL CONDITION OF THE EXCHANGE PROPERTIES, OR THE WEST HAYMARKET PROJECT AND/OR THE PROJECT AREA, OR ANY PROPERTY ADJACENT THERETO.**

3.6.3 **FURTHER, TO THE FULLEST EXTENT PERMITTED BY LAW, CITY AGREES, AND SHALL CAUSE CITY'S CONTRACTORS TO AGREE, REGARDLESS OF ANY NEGLIGENCE OR ALLEGED NEGLIGENCE OF BNSF, TO INDEMNIFY, DEFEND AND HOLD HARMLESS BNSF AGAINST AND ASSUME THE DEFENSE OF ANY LIABILITIES ASSERTED AGAINST OR SUFFERED BY BNSF UNDER OR RELATED TO THE FEDERAL EMPLOYERS' LIABILITY ACT ("FELA") WHENEVER EMPLOYEES OF CITY OR ANY OF ITS AGENTS, INVITEES, OR CONTRACTORS CLAIM OR ALLEGE THAT THEY ARE EMPLOYEES OF BNSF OR OTHERWISE. THIS INDEMNITY SHALL ALSO EXTEND, ON THE SAME BASIS, TO FELA CLAIMS BASED ON ACTUAL OR ALLEGED VIOLATIONS OF ANY FEDERAL, STATE OR LOCAL LAWS OR REGULATIONS, INCLUDING BUT NOT LIMITED TO THE SAFETY APPLIANCE ACT, THE LOCOMOTIVE INSPECTION ACT, THE OCCUPATIONAL SAFETY AND HEALTH ACT, THE RESOURCE CONSERVATION AND RECOVERY ACT, AND ANY SIMILAR STATE OR FEDERAL STATUTE.**

3.6.4 City agrees that its obligations under the provisions of this **Section 3.6** expressly includes claims related to property related to the West Haymarket Project that was formerly, but not currently, owned by BNSF and BNSF's predecessors-in-interest. City's indemnification obligations herein shall be in addition to, and not in limitation of, City's indemnification obligations pursuant to the terms and provisions of the Master Agreement, the Exchange Agreement and the Rights of Entry agreements.

3.7 Waiver of Municipal and Sovereign Immunity. To the fullest extent permitted by law, City waives its municipal immunity and its sovereign immunity with respect to BNSF for matters arising out of the West Haymarket Project, the Master Agreement, the Exchange Agreement, the Rights of Entry agreements, and this C&M Agreement, including, without limitation, (i) for environmental and other conditions of the Replacement BNSF Property that City is conveying to BNSF pursuant to the Master Agreement and the Exchange Agreement; (ii) for environmental and other conditions of the real property that BNSF is quitclaiming to City pursuant to the Master Agreement and the Exchange Agreement and of property related to the West Haymarket Project that was formerly, but not currently, owned by BNSF and BNSF's predecessors-in-interest, including remediation costs beyond Nebraska Department of Environmental Quality Title 200 funds ("**Title 200 Funding**"); (iii) for claims arising out of work performed by City or its contractors pursuant to the provisions of this C&M Agreement, the Master Agreement, the Exchange Agreement, the Rights of Entry agreements, and the Exchange Agreement; and (iv) for claims arising out of continuing rights of City to enter onto property of BNSF, including work performed by City and City Contractors on such property of BNSF. Any lawful waiver of City's sovereign immunity herein shall be in addition to, and not in limitation of, any lawful waiver of City's sovereign immunity pursuant to the terms and provisions of the Master Agreement, the Exchange Agreement, and the Rights of Entry agreements.

3.8 Insurance Obligations.

3.8.1 During the Development Period, City shall, at its sole cost and expense, procure and maintain the following insurance:

3.8.1.1 Commercial General Liability Insurance. This insurance shall contain broad form contractual liability in an amount of at least $25,000,000 per occurrence and an aggregate limit of $50,000,000, but in no event less than the amount otherwise carried by City. Coverage must be purchased on a post 1998 ISO occurrence form or equivalent and include coverage for, but not limited to, the following:

- Bodily Injury and Property Damage
- Personal Injury and Advertising Injury
- Fire legal liability
- Products and completed operations

This policy shall also contain the following endorsements, which shall be indicated on the certificate of insurance:

- The definition of insured contract shall be amended to remove any exclusion or other limitation for any work being done within 50 feet of railroad property.
- Waiver of subrogation in favor of and acceptable to Railroad.
- Additional insured endorsement in favor of and acceptable to Railroad
- Separation of insureds.
- The policy shall be primary and non-contributing with respect to any insurance carried by Railroad.

It is agreed that the workers' compensation and employers' liability related exclusions in the Commercial General Liability insurance policy(s) required herein are intended to apply to employees of the policy holder and shall not apply to Railroad employees.

3.8.1.2 Business Automobile Insurance. This insurance shall contain a combined single limit of at least $1,000,000 per occurrence, and include coverage for, but not limited to the following:

- Bodily injury and property damage
- Any and all vehicles owned, used or hired

This policy shall also contain the following endorsements or language, which shall be indicated on the certificate of insurance:

- Waiver of subrogation in favor of and acceptable to Railroad.
- Additional insured endorsement in favor or and acceptable to Railroad.
- Separation of insureds.
- The policy shall be primary and non-contributing with respect to any insurance carried by Railroad.

3.8.1.3 Workers' Compensation and Employers' Liability Insurance. This insurance shall include coverage for, but not limited to:

- City's statutory liability under the workers' compensation laws of the *state(s) in which the work is to be performed. If optional under State law,* the insurance must cover all employees anyway.
- Employers' Liability (Part B) with limits of at least $500,000 each accident, $500,000 by disease policy limit, $500,000 by disease each employee.

This policy shall also contain the following endorsements or language, which shall be indicated on the certificate of insurance:

- Waiver of subrogation in favor of and acceptable to Railroad.

3.8.1.4 Railroad Protective Liability Insurance. This insurance shall name only the Railroad as the Insured with coverage of at least $5,000,000.00 per occurrence and $10,000,000.00 in the aggregate. The policy shall be issued on a standard ISO form CG 00 35 10 93 and include the following:

- Endorsed to include the Pollution Exclusion Amendment (ISO form CG 28 31 10 93)
- Endorsed to include the Limited Seepage and Pollution Endorsement.
- *Endorsed to remove any exclusion for punitive damages.*
- No other endorsements restricting coverage may be added.
- The original policy must be provided to Railroad prior to performing any work or services under this C&M Agreement

In lieu of providing a Railroad Protective Liability Policy, City may participate in BNSF's Blanket Railroad Protective Liability Insurance Policy available to City and City Contractors.

3.8.1.5 Other Requirements:

All policies (applying to coverage listed above) must not contain an exclusion for punitive damages and certificates of insurance must reflect that no exclusion exists.

City agrees to waive its right of recovery against Railroad for all claims and suits against Railroad, except for claims and suits arising wholly out of the sole negligence, or to the extent caused by the gross negligence or willful misconduct, of Railroad. In addition, its insurers, through the terms of the policy or policy endorsement, waive their right of subrogation against Railroad for all claims and suits, except for claims and suits arising wholly out of the sole negligence, or to the extent caused by the gross negligence or willful misconduct, of Railroad. The certificate of insurance must reflect the waiver of subrogation endorsement. City further waives its right of recovery, and its insurers also waive their right of subrogation against Railroad for loss of its owned or leased property or property under City's care, custody or control, except for rights of recovery and rights of subrogation arising wholly out of the sole negligence, or to the extent caused by the gross negligence or willful misconduct, of Railroad.

City is allowed to self-insure up to $250,000 per occurrence and $250,000 aggregate on General Liability and Automotive Liability and up to $500,000 per occurrence and $500,000 aggregate on Worker's Compensation Liability without the prior written consent of Railroad. Any deductible, self-insured retention or other financial responsibility for claims must be covered directly by City in lieu of insurance. Any and all Railroad Liabilities that would otherwise, in accordance with the provisions

of this C&M Agreement, be covered by insurance will be covered as if City elected not to include a deductible, self-insured retention or other financial responsibility for claims.

Prior to commencing the City C&M Work, City must furnish to Railroad acceptable certificate(s) of insurance including an original signature of the authorized representative evidencing the required coverage, endorsements, and amendments. The policy(ies) must contain a provision that obligates the insurance company(ies) issuing such policy(ies) to notify Railroad in writing at least 30 days prior to any cancellation, non-renewal, substitution or material alteration. This cancellation provision must be indicated on the certificate of insurance. Upon request from Railroad, a certified duplicate original of any required policy must be furnished. Certificate(s) should be sent to the following address:

Ebix BPO
PO Box 12010-BN
Hemet, CA 92546-8010
Fax number: 951-652-2882
Email: bnsf@ebix.com

Upon notification to BNSF of cancellation, non-renewal, substitution or material alteration of any such policy(ies), BNSF shall have the option to (i) if feasible, pay, on behalf of the City, any and all such premiums, penalties, fees or expenses necessary to keep such policy(ies) in full force and effect; or (ii) in the event that such policy(ies) cannot be kept in full force and effect, enter into the open market and procure such policy(ies) of insurance on behalf of City as required by this C&M Agreement at the then-current market rate. Upon any of the above occurrences, BNSF shall invoice the City for reimbursement of all such premiums, penalties, fees or expenses advanced on City's behalf plus an additional fifteen (15%) of such advanced amounts as remuneration for BNSF's overhead. Such amounts advanced by BNSF shall be paid by City within thirty (30) days after delivery of a statement for such expense. Any insurance policy must be written by a reputable insurance company reasonably acceptable to Railroad or with a current Best's Guide Rating of A- and Class VII or better, and authorized to do business in the state(s) in which the service is to be provided.

City represents that this C&M Agreement has been thoroughly reviewed by its insurance agent(s)/broker(s), who have been instructed by City to procure the insurance coverage required by this C&M Agreement. Allocated Loss Expense must be in addition to all policy limits for coverages referenced above. City represents that it understands and its insurance agent(s)/broker(s) have been informed that the City's insurance coverage being procured by City herein is to protect, defend, indemnify and hold harmless BNSF from any and all Liabilities, as such term is defined herein, that may arise in connection with this C&M Agreement and City, to the fullest extent allowed by law, waives its sovereign and municipal immunity and any caps or limitations on legal liability that may result therefrom.

Not more frequently than once every five years, Railroad may reasonably modify the required insurance coverage to reflect then-current risk management practices in the railroad industry and underwriting practices in the insurance industry.

If any portion of the operation is to be subcontracted by City, City must require that City Contractors provide and maintain the insurance coverages set forth herein, naming Railroad as an additional insured; provided, however, that policy limits for Commercial General Liability Insurance may be reduced to $5,000,000 per occurrence and an aggregate limit of $10,000,000, but in no event less than the amount otherwise carried by the City Contractor. In addition, City must require that City Contractor release, defend and indemnify Railroad to the same extent and under the same terms and conditions as City is required to release, defend and indemnify Railroad herein.

Failure to provide evidence as required by this **Section 3.8** will entitle, but not require, Railroad to immediately suspend, until such default is cured, any and/or all work under this C&M Agreement, including without limitation: (i) BNSF Work, (ii) City C&M Work, and (iii) any other work on or affecting any BNSF property, subject to termination as provided in the Master Agreement. Acceptance of a certificate that does not comply with this section will not operate as a waiver of City's obligations hereunder.

The fact that insurance (including, without limitation, self-insurance) is obtained by City will not be deemed to release or diminish the liability of City including, without limitation, liability under the indemnity provisions of this C&M Agreement. Damages recoverable by Railroad will not be limited by the amount of the required insurance coverage.

For purposes of this **Section 3.8**, Railroad means "Burlington Northern Santa Fe, LLC", "BNSF Railway Company" and the subsidiaries, successors, assigns and affiliates of each.

3.8.2 During the Post-Development Period (as defined in the Master Agreement), City shall, and shall require City Contractors to, at City's sole cost and expense, procure and maintain the insurance coverages listed in the applicable Rights of Entry, continuing thereafter so long as the C&M Agreement and/or any Right of Entry agreement is in effect.

3.9 Adherence to Timeline. City must require City Contractors to reasonably adhere to the Timeline. The Parties mutually agree that BNSF's failure to complete the BNSF Work in accordance with *the Timeline due to inclement weather or unforeseen railroad emergencies will not constitute a breach of* this C&M Agreement by BNSF and will not subject BNSF to any liability. Regardless of the requirements of the Timeline, BNSF reserves the right to reallocate the labor forces assigned to complete the BNSF Work in the event of an emergency to provide for the immediate restoration of railroad operations (BNSF or its related railroads) or to protect persons or property on or near any BNSF owned property. BNSF will not be liable for any additional costs or expenses resulting from any such reallocation of its labor forces. The Parties mutually agree that any reallocation of labor forces by BNSF pursuant to this provision and any direct or indirect consequences or costs resulting from any such reallocation will not constitute a breach of this C&M Agreement by BNSF.

ARTICLE IV – MISCELLANEOUS

4.1 Any books, papers, receipts, and accounts of the Parties relating to the City C&M Work and the BNSF Additional City Cost Work will at all reasonable times and upon reasonable prior written notice be open to inspection and audit by the agents and authorized representatives of the Parties for a period of one (1) year after the date of the final disbursement from the Escrow Account.

4.2 The terms and conditions of indemnification and liability provisions of **Sections 3.6** and **3.7** shall survive expiration or termination of this C&M Agreement, the Master Agreement and the Exchange Agreement, and all Closings under the Exchange Agreement.

4.3 The covenants and provisions of this C&M Agreement are binding upon and inure to the benefit of the successors and assigns of the Parties. Notwithstanding the preceding sentence, neither Party may assign its rights and obligations hereunder without the prior written consent of the other Party. Any permitted assignment shall not terminate the liability of the assigning Party, unless a specific release of such liability in writing is given and signed by the other Party. Notwithstanding any contrary provision herein; City shall have the right to assign this C&M Agreement to the West Haymarket Joint Public Agency, a Nebraska joint public agency ("**JPA**") without further consent of BNSF provided (i) City delivers prior written notification to BNSF of the assignment, (ii) City and JPA enters into BNSF's then-standard Consent to Assignment form, pursuant to which City will remain jointly and severally liable for all of City's obligations hereunder, including without limitation City's liability and indemnification obligations; provided that BNSF agrees it will first send any claim or notice of default to JPA and will not pursue any action against City until thirty (30) days after the date of such claim or notice to JPA, unless failure to pursue action against City during such time would otherwise prejudice BNSF's rights, and (iii) City's entire interest under the Master Agreement, the Exchange Agreement, and all Rights of Entry agreements are assigned at the same time to JPA.

4.4 This C&M Agreement shall be in effect for so long as the Master Agreement and/or any Right of Entry is in effect; provided, however, that if the Master Agreement and all Rights of Entry have expired or been terminated, BNSF has the right to terminate this C&M Agreement upon written notice to City.

4.5 Neither termination nor expiration of this C&M Agreement will release either Party from any liability or obligation under this C&M Agreement, whether of indemnity or otherwise, resulting from any acts, omissions or events happening prior to the date of termination or expiration.

4.6 Any notice required or permitted to be given hereunder by one Party to the other shall be in writing and the same shall be given and shall be deemed to have been served and given if: (i) placed in the United States mail, certified, return receipt requested, or (ii) deposited into the custody of a nationally recognized overnight delivery service, addressed to the Party to be notified at the address for such Party specified below, or to such other address as the Party to be notified may designate by giving the other Party no less than thirty (30) days' advance written notice of such change in address.

If to BNSF: BNSF Railway Company
P.O. Box 961034
Fort Worth, TX 76161-0034.
Attn: Robert J. Boileau, P.E., Assistant Vice President, Engineering Services

If to City: City of Lincoln, Nebraska
555 South 10th Street
Lincoln, NE 68508
Attn: City Attorney

4.7 Time is of the essence of this C&M Agreement.

4.8 In any action (declaratory or otherwise) brought by either Party in connection with or arising out of the terms of this C&M Agreement, the prevailing Party in such action will be entitled to recover from the non-prevailing Party all actual costs, actual damages, and actual expenses, including, without limitation, reasonable attorneys' fees and charges to the fullest extent permitted by law.

4.9 Each Party and its counsel have reviewed and revised this C&M Agreement. The Parties agree that the rule of construction that any ambiguities are to be resolved against the drafting Party must not be employed to interpret this C&M Agreement or its amendments or exhibits.

4.10 If any clause or provision of this C&M Agreement is illegal, invalid or unenforceable under present or future laws effective during the term of this C&M Agreement, then and in that event, it is the intention of the Parties that the remainder of this C&M Agreement shall not be affected thereby, and it is also the intention of the Parties that in lieu of each clause or provision of this C&M Agreement that is illegal, invalid or unenforceable, there be added, as a part of this C&M Agreement, a clause or provision as similar in terms to such illegal, invalid or unenforceable clause or provision as may be possible and be legal, valid and enforceable.

4.11 This C&M Agreement, the Master Agreement, the Exchange Agreement, and, to the extent executed, the Right of Entry licenses and/or easements described herein, contain the entire agreement between BNSF and City with respect to the West Haymarket Project. Oral statements or prior written matters not specifically incorporated into this C&M Agreement are superseded hereby. No variation, modification, or change to this C&M Agreement, the Exchange Agreement or the Rights of Entry agreements shall bind either Party unless set forth in a document signed by both Parties. No failure or delay of either Party in exercising any right, power or privilege hereunder shall operate as a waiver of such Party's right to require strict compliance with any term of this C&M Agreement. The captions next to the section numbers of this C&M Agreement are for reference only and do not modify or affect this C&M Agreement.

4.12 No director, officer, elected or appointed official, or employee of either of the Parties shall be personally liable in the event of any default.

4.13 This C&M Agreement may be executed in more than one counterpart, including facsimile transmissions, each of which shall be deemed an original.

4.14 As of this same Effective Date, City and BNSF have also entered into the Master Agreement, the Exchange Agreement and to the extent executed, certain Right of Entry licenses and/or easements. After the Effective Date and upon completion of additional design work, City and BNSF expect to execute other Right of Entry licenses and/or easements. City and BNSF agree that, except as otherwise stated in **Article 1** of this C&M Agreement: (i) in the event the terms of the Master Agreement and the terms of the C&M Agreement, the Exchange Agreement and the various licenses and/or easements are inconsistent, then the Master Agreement shall prevail; (ii) in the event the terms of the Exchange Agreement and the terms of the C&M Agreement and the various licenses and/or easements are inconsistent, then the Exchange Agreement shall prevail, and (iii) in the event the terms of the C&M Agreement and the various licenses and/or easements are inconsistent, then the C&M Agreement shall prevail.

4.15 All aspects of this C&M Agreement shall be governed by the laws of the State of Nebraska.

4.16 To the fullest extent permitted by law any dispute arising under or in connection with this C&M Agreement or related to any subject matter which is the subject of this C&M Agreement shall be subject to the sole and exclusive jurisdiction of the United States District Court for the District of Nebraska. The aforementioned choice of venue is intended by the Parties to be mandatory and not permissive. Each Party hereby irrevocably consents to the jurisdiction of the United States District Court for the District of Nebraska in any such dispute and irrevocably waives, to the fullest extent permitted by law, any objection that it may now have or hereafter have to the laying of venue in such court and that any such dispute which is brought in such court has been brought in an inconvenient forum.

4.17 By signing below, the Parties affirm they have the legal authority to enter into this C&M Agreement.

4.18 Each Party will, whenever it shall be reasonably requested to do so by the other, promptly execute, acknowledge, and deliver, or cause to be executed, acknowledged, or delivered, any and all such reasonable further confirmations, instruments, or further assurances and consents as may be reasonably necessary or proper in order to effectuate the covenants and agreements herein provided. Each Party shall reasonably cooperate in good faith with the other and shall do any and all other acts and execute, acknowledge and deliver any and all documents so reasonably requested in order to satisfy the conditions set forth herein and carry out the intent and purposes of this C&M Agreement.

[*Signature page follows*]

Signature Page - C&M Agreement

IN WITNESS WHEREOF, the Parties have caused this C&M Agreement to be executed as of the date below each Party's signature; to be effective, however, as of the Effective Date above.

CITY OF LINCOLN, NEBRASKA, a Nebraska municipal corporation

By: _____
Chris Beutler, Mayor of Lincoln

Date: 10/19/2010

BNSF RAILWAY COMPANY, a Delaware corporation

By: _____
David L. Freeman, Vice President – Engineering

Date: _____

Signature Page - C&M Agreement

IN WITNESS WHEREOF, the Parties have caused this C&M Agreement to be executed as of the date below each Party's signature; to be effective, however, as of the Effective Date above.

CITY OF LINCOLN, NEBRASKA, a Nebraska municipal corporation

By: _____
Chris Beutler, Mayor of Lincoln

Date: _____

BNSF RAILWAY COMPANY, a Delaware corporation

By: _____
David L. Freeman, Vice President – Engineering

Date: _____

EXHIBIT A

Project Area

[See attached]

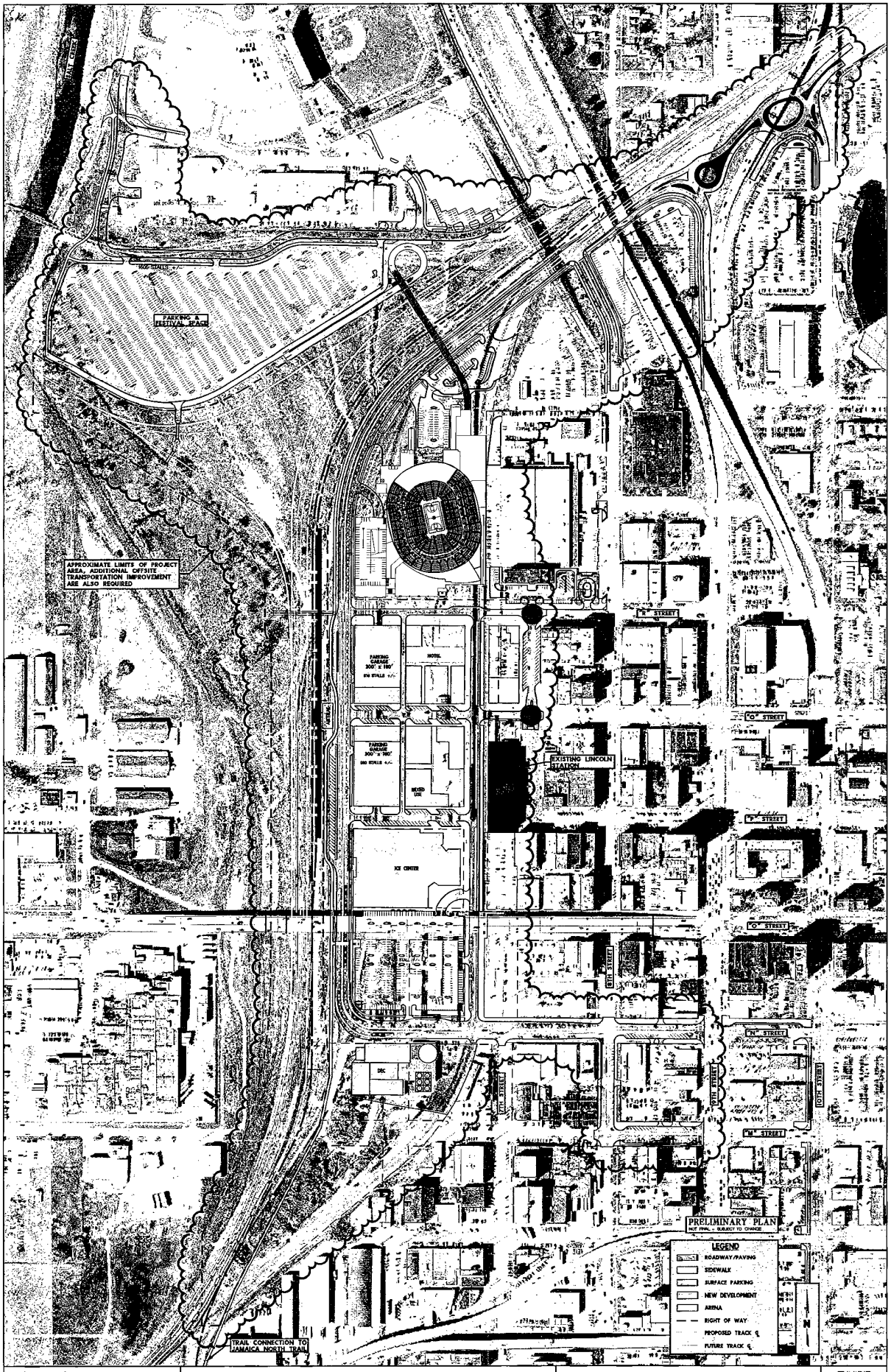
PARKING & FESTIVAL SPACE
APPROXIMATE LIMITS OF PROJECT AREA; ADDITIONAL OFFSITE TRANSPORTATION IMPROVEMENT ARE ALSO REQUIRED
PARKING GARAGE 300' x 180' 816 STALLS +/-
HOTEL
PARKING GARAGE 300' x 180' 360 STALLS +/-
MIXED USE
ICE CENTER
EXISTING LINCOLN STADIUM
"N" STREET
"O" STREET
"P" STREET
"Q" STREET
"R" STREET
"S" STREET
"T" STREET
"U" STREET
"V" STREET
"W" STREET
"X" STREET
"Y" STREET
"Z" STREET
"AA" STREET
"BB" STREET
"CC" STREET
"DD" STREET
"EE" STREET
"FF" STREET
"GG" STREET
"HH" STREET
"II" STREET
"JJ" STREET
"KK" STREET
"LL" STREET
"MM" STREET
"NN" STREET
"OO" STREET
"PP" STREET
"QQ" STREET
"RR" STREET
"SS" STREET
"TT" STREET
"UU" STREET
"VV" STREET
"WW" STREET
"XX" STREET
"YY" STREET
"ZZ" STREET
"AAA" STREET
"BBB" STREET
"CCC" STREET
"DDD" STREET
"EEE" STREET
"FFF" STREET
"GGG" STREET
"HHH" STREET
"III" STREET
"JJJ" STREET
"KKK" STREET
"LLL" STREET
"MMM" STREET
"NNN" STREET
"OOO" STREET
"PPP" STREET
"QQQ" STREET
"RRR" STREET
"SSS" STREET
"TTT" STREET
"UUU" STREET
"VVV" STREET
"WWW" STREET
"XXX" STREET
"YYY" STREET
"ZZZ" STREET
"AAAA" STREET
"BBBB" STREET
"CCCC" STREET
"DDDD" STREET
"EEEE" STREET
"FFFF" STREET
"GGGG" STREET
"HHHH" STREET
"IIII" STREET
"JJJJ" STREET
"KKKK" STREET
"LLLL" STREET
"MMMM" STREET
"NNNN" STREET
"OOOO" STREET
"PPPP" STREET
"QQQQ" STREET
"RRRR" STREET
"SSSS" STREET
"TTTT" STREET
"UUUU" STREET
"VVVV" STREET
"WWWW" STREET
"XXXX" STREET
"YYYY" STREET
"ZZZZ" STREET
"AAAAA" STREET
"BBBBB" STREET
"CCCCC" STREET
"DDDDD" STREET
"EEEEE" STREET
"FFFFF" STREET
"GGGGG" STREET
"HHHHH" STREET
"IIIII" STREET
"JJJJJ" STREET
"KKKKK" STREET
"LLLLL" STREET
"MMMMM" STREET
"NNNNN" STREET
"OOOOO" STREET
"PPPPP" STREET
"QQQQQ" STREET
"RRRRR" STREET
"SSSSS" STREET
"TTTTT" STREET
"UUUUU" STREET
"VVVVV" STREET
"WWWWW" STREET
"XXXXX" STREET
"YYYYY" STREET
"ZZZZZ" STREET
"AAAAAA" STREET
"BBBBBB" STREET
"CCCCCC" STREET
"DDDDDD" STREET
"EEEEEE" STREET
"FFFFFF" STREET
"GGGGGG" STREET
"HHHHHH" STREET
"IIIIII" STREET
"JJJJJJ" STREET
"KKKKKK" STREET
"LLLLLL" STREET
"MMMMMM" STREET
"NNNNNN" STREET
"OOOOOO" STREET
"PPPPPP" STREET
"QQQQQQ" STREET
"RRRRRR" STREET
"SSSSSS" STREET
"TTTTTT" STREET
"UUUUUU" STREET
"VVVVVV" STREET
"WWWWWW" STREET
"XXXXXX" STREET
"YYYYYY" STREET
"ZZZZZZ" STREET
"AAAAAAA" STREET
"BBBBBBB" STREET
"CCCCCCC" STREET
"DDDDDDD" STREET
"EEEEEEE" STREET
"FFFFFFF" STREET
"GGGGGGG" STREET
"HHHHHHH" STREET
"IIIIIII" STREET
"JJJJJJJ" STREET
"KKKKKKK" STREET
"LLLLLLL" STREET
"MMMMMMM" STREET
"NNNNNNN" STREET
"OOOOOOO" STREET
"PPPPPPP" STREET
"QQQQQQQ" STREET
"RRRRRRR" STREET
"SSSSSSS" STREET
"TTTTTTT" STREET
"UUUUUUU" STREET
"VVVVVVV" STREET
"WWWWWWW" STREET
"XXXXXXX" STREET
"YYYYYYY" STREET
"ZZZZZZZ" STREET
"AAAAAAAA" STREET
"BBBBBBBB" STREET
"CCCCCCCC" STREET
"DDDDDDDD" STREET
"EEEEEEEE" STREET
"FFFFFFFF" STREET
"GGGGGGGG" STREET
"HHHHHHHH" STREET
"IIIIIIII" STREET
"JJJJJJJJ" STREET
"KKKKKKKK" STREET
"LLLLLLLL" STREET
"MMMMMMMM" STREET
"NNNNNNNN" STREET
"OOOOOOOO" STREET
"PPPPPPPP" STREET
"QQQQQQQQ" STREET
"RRRRRRRR" STREET
"SSSSSSSS" STREET
"TTTTTTTT" STREET
"UUUUUUUU" STREET
"VVVVVVVV" STREET
"WWWWWWWW" STREET
"XXXXXXXX" STREET
"YYYYYYYY" STREET
"ZZZZZZZZ" STREET
"AAAAAAAAA" STREET
"BBBBBBBBB" STREET
"CCCCCCCCC" STREET
"DDDDDDDDD" STREET
"EEEEEEEEE" STREET
"FFFFFFFFF" STREET
"GGGGGGGGG" STREET
"HHHHHHHHH" STREET
"IIIIIIIII" STREET
"JJJJJJJJJ" STREET
"KKKKKKKKK" STREET
"LLLLLLLLL" STREET
"MMMMMMMMM" STREET
"NNNNNNNNN" STREET
"OOOOOOOOO" STREET
"PPPPPPPPP" STREET
"QQQQQQQQQ" STREET
"RRRRRRRRR" STREET
"SSSSSSSSS" STREET
"TTTTTTTTT" STREET
"UUUUUUUUU" STREET
"VVVVVVVVV" STREET
"WWWWWWWWW" STREET
"XXXXXXXXX" STREET
"YYYYYYYYY" STREET
"ZZZZZZZZZ" STREET
"AAAAAAAAAA" STREET
"BBBBBBBBBB" STREET
"CCCCCCCCCC" STREET
"DDDDDDDDDD" STREET
"EEEEEEEEEE" STREET
"FFFFFFFFFF" STREET
"GGGGGGGGGG" STREET
"HHHHHHHHHH" STREET
"IIIIIIIIII" STREET
"JJJJJJJJJJ" STREET
"KKKKKKKKKK" STREET
"LLLLLLLLLL" STREET
"MMMMMMMMMM" STREET
"NNNNNNNNNN" STREET
"OOOOOOOOOO" STREET
"PPPPPPPPPP" STREET
"QQQQQQQQQQ" STREET
"RRRRRRRRRR" STREET
"SSSSSSSSSS" STREET
"TTTTTTTTTT" STREET
"UUUUUUUUUU" STREET
"VVVVVVVVVV" STREET
"WWWWWWWWWW" STREET
"XXXXXXXXXX" STREET
"YYYYYYYYYY" STREET
"ZZZZZZZZZZ" STREET
"AAAAAAAAAAA" STREET
"BBBBBBBBBBB" STREET
"CCCCCCCCCCC" STREET
"DDDDDDDDDDD" STREET
"EEEEEEEEEEE" STREET
"FFFFFFFFFFF" STREET
"GGGGGGGGGGG" STREET
"HHHHHHHHHHH" STREET
"IIIIIIIIIII" STREET
"JJJJJJJJJJJ" STREET
"KKKKKKKKKKK" STREET
"LLLLLLLLLLL" STREET
"MMMMMMMMMMM" STREET
"NNNNNNNNNNN" STREET
"OOOOOOOOOOO" STREET
"PPPPPPPPPPP" STREET
"QQQQQQQQQQQ" STREET
"RRRRRRRRRRR" STREET
"SSSSSSSSSSS" STREET
"TTTTTTTTTTT" STREET
"UUUUUUUUUUU" STREET
"VVVVVVVVVVV" STREET
"WWWWWWWWWWW" STREET
"XXXXXXXXXXX" STREET
"YYYYYYYYYYY" STREET
"ZZZZZZZZZZZ" STREET
"AAAAAAAAAAAA" STREET
"BBBBBBBBBBBB" STREET
"CCCCCCCCCCCC" STREET
"DDDDDDDDDDDD" STREET
"EEEEEEEEEEEE" STREET
"FFFFFFFFFFFF" STREET
"GGGGGGGGGGGG" STREET
"HHHHHHHHHHHH" STREET
"IIIIIIIIIIII" STREET
"JJJJJJJJJJJJ" STREET
"KKKKKKKKKKKK" STREET
"LLLLLLLLLLLL" STREET
"MMMMMMMMMMMM" STREET
"NNNNNNNNNNNN" STREET
"OOOOOOOOOOOO" STREET
"PPPPPPPPPPPP" STREET
"QQQQQQQQQQQQ" STREET
"RRRRRRRRRRRR" STREET
"SSSSSSSSSSSS" STREET
"TTTTTTTTTTTT" STREET
"UUUUUUUUUUUU" STREET
"VVVVVVVVVVVV" STREET
"WWWWWWWWWWWW" STREET
"XXXXXXXXXXXX" STREET
"YYYYYYYYYYYY" STREET
"ZZZZZZZZZZZZ" STREET
"AAAAAAAAAAAAA" STREET
"BBBBBBBBBBBBB" STREET
"CCCCCCCCCCCCC" STREET
"DDDDDDDDDDDDD" STREET
"EEEEEEEEEEEEE" STREET
"FFFFFFFFFFFFF" STREET
"GGGGGGGGGGGGG" STREET
"HHHHHHHHHHHHH" STREET
"IIIIIIIIIIIII" STREET
"JJJJJJJJJJJJJ" STREET
"KKKKKKKKKKKKK" STREET
"LLLLLLLLLLLLL" STREET
"MMMMMMMMMMMMM" STREET
"NNNNNNNNNNNNN" STREET
"OOOOOOOOOOOOO" STREET
"PPPPPPPPPPPPP" STREET
"QQQQQQQQQQQQQ" STREET
"RRRRRRRRRRRRR" STREET
"SSSSSSSSSSSSS" STREET
"TTTTTTTTTTTTT" STREET
"UUUUUUUUUUUUU" STREET
"VVVVVVVVVVVVV" STREET
"WWWWWWWWWWWWW" STREET
"XXXXXXXXXXXXX" STREET
"YYYYYYYYYYYYY" STREET
"ZZZZZZZZZZZZZ" STREET
"AAAAAAAAAAAAAA" STREET
"BBBBBBBBBBBBBB" STREET
"CCCCCCCCCCCCCC" STREET
"DDDDDDDDDDDDDD" STREET
"EEEEEEEEEEEEEE" STREET
"FFFFFFFFFFFFFF" STREET
"GGGGGGGGGGGGGG" STREET
"HHHHHHHHHHHHHH" STREET
"IIIIIIIIIIIIII" STREET
"JJJJJJJJJJJJJJ" STREET
"KKKKKKKKKKKKKK" STREET
"LLLLLLLLLLLLLL" STREET
"MMMMMMMMMMMMMM" STREET
"NNNNNNNNNNNNNN" STREET
"OOOOOOOOOOOOOO" STREET
"PPPPPPPPPPPPPP" STREET
"QQQQQQQQQQQQQQ" STREET
"RRRRRRRRRRRRRR" STREET
"SSSSSSSSSSSSSS" STREET
"TTTTTTTTTTTTTT" STREET
"UUUUUUUUUUUUUU" STREET
"VVVVVVVVVVVVVV" STREET
"WWWWWWWWWWWWWW" STREET
"XXXXXXXXXXXXXX" STREET
"YYYYYYYYYYYYYY" STREET
"ZZZZZZZZZZZZZZ" STREET
"AAAAAAAAAAAAAAA" STREET
"BBBBBBBBBBBBBBB" STREET
"CCCCCCCCCCCCCCC" STREET
"DDDDDDDDDDDDDDD" STREET
"EEEEEEEEEEEEEEE" STREET
"FFFFFFFFFFFFFFF" STREET
"GGGGGGGGGGGGGGG" STREET
"HHHHHHHHHHHHHHH" STREET
"IIIIIIIIIIIIIII" STREET
"JJJJJJJJJJJJJJJ" STREET
"KKKKKKKKKKKKKKK" STREET
"LLLLLLLLLLLLLLL" STREET
"MMMMMMMMMMMMMMM" STREET
"NNNNNNNNNNNNNNN" STREET
"OOOOOOOOOOOOOOO" STREET
"PPPPPPPPPPPPPPP" STREET
"QQQQQQQQQQQQQQQ" STREET
"RRRRRRRRRRRRRRR" STREET
"SSSSSSSSSSSSSSS" STREET
"TTTTTTTTTTTTTTT" STREET
"UUUUUUUUUUUUUUU" STREET
"VVVVVVVVVVVVVVV" STREET
"WWWWWWWWWWWWWWW" STREET
"XXXXXXXXXXXXXXX" STREET
"YYYYYYYYYYYYYYY" STREET
"ZZZZZZZZZZZZZZZ" STREET
"AAAAAAAAAAAAAAAA" STREET
"BBBBBBBBBBBBBBBB" STREET
"CCCCCCCCCCCCCCCC" STREET
"DDDDDDDDDDDDDDDD" STREET
"EEEEEEEEEEEEEEEE" STREET
"FFFFFFFFFFFFFFFF" STREET
"GGGGGGGGGGGGGGGG" STREET
"HHHHHHHHHHHHHHHH" STREET
"IIIIIIIIIIIIIIII" STREET
"JJJJJJJJJJJJJJJJ" STREET
"KKKKKKKKKKKKKKKK" STREET
"LLLLLLLLLLLLLLLL" STREET
"MMMMMMMMMMMMMMMM" STREET
"NNNNNNNNNNNNNNNN" STREET
"OOOOOOOOOOOOOOOO" STREET
"PPPPPPPPPPPPPPPP" STREET
"QQQQQQQQQQQQQQQQ" STREET
"RRRRRRRRRRRRRRRR" STREET
"SSSSSSSSSSSSSSSS" STREET
"TTTTTTTTTTTTTTTT" STREET
"UUUUUUUUUUUUUUUU" STREET
"VVVVVVVVVVVVVVVV" STREET
"WWWWWWWWWWWWWWWW" STREET
"XXXXXXXXXXXXXXXX" STREET
"YYYYYYYYYYYYYYYY" STREET
"ZZZZZZZZZZZZZZZZ" STREET
"AAAAAAAAAAAAAAAAA" STREET
"BBBBBBBBBBBBBBBBB" STREET
"CCCCCCCCCCCCCCCCC" STREET
"DDDDDDDDDDDDDDDDD" STREET
"EEEEEEEEEEEEEEEEE" STREET
"FFFFFFFFFFFFFFFFF" STREET
"GGGGGGGGGGGGGGGGG" STREET
"HHHHHHHHHHHHHHHHH" STREET
"IIIIIIIIIIIIIIIII" STREET
"JJJJJJJJJJJJJJJJJ" STREET
"KKKKKKKKKKKKKKKKK" STREET
"LLLLLLLLLLLLLLLLL" STREET
"MMMMMMMMMMMMMMMMM" STREET
"NNNNNNNNNNNNNNNNN" STREET
"OOOOOOOOOOOOOOOOO" STREET
"PPPPPPPPPPPPPPPPP" STREET
"QQQQQQQQQQQQQQQQQ" STREET
"RRRRRRRRRRRRRRRRR" STREET
"SSSSSSSSSSSSSSSSS" STREET
"TTTTTTTTTTTTTTTTT" STREET
"UUUUUUUUUUUUUUUUU" STREET
"VVVVVVVVVVVVVVVVV" STREET
"WWWWWWWWWWWWWWWWW" STREET
"XXXXXXXXXXXXXXXXX" STREET
"YYYYYYYYYYYYYYYYY" STREET
"ZZZZZZZZZZZZZZZZZ" STREET
"AAAAAAAAAAAAAAAAAA" STREET
"BBBBBBBBBBBBBBBBBB" STREET
"CCCCCCCCCCCCCCCCCC" STREET
"DDDDDDDDDDDDDDDDDD" STREET
"EEEEEEEEEEEEEEEEEE" STREET
"FFFFFFFFFFFFFFFFFF" STREET
"GGGGGGGGGGGGGGGGGG" STREET
"HHHHHHHHHHHHHHHHHH" STREET
"IIIIIIIIIIIIIIIIII" STREET
"JJJJJJJJJJJJJJJJJJ" STREET
"KKKKKKKKKKKKKKKKKK" STREET
"LLLLLLLLLLLLLLLLLL" STREET
"MMMMMMMMMMMMMMMMMM" STREET
"NNNNNNNNNNNNNNNNNN" STREET
"OOOOOOOOOOOOOOOOOO" STREET
"PPPPPPPPPPPPPPPPPP" STREET
"QQQQQQQQQQQQQQQQQQ" STREET
"RRRRRRRRRRRRRRRRRR" STREET
"SSSSSSSSSSSSSSSSSS" STREET
"TTTTTTTTTTTTTTTTTT" STREET
"UUUUUUUUUUUUUUUUUU" STREET
"VVVVVVVVVVVVVVVVVV" STREET
"WWWWWWWWWWWWWWWWWW" STREET
"XXXXXXXXXXXXXXXXXX" STREET
"YYYYYYYYYYYYYYYYYY" STREET
"ZZZZZZZZZZZZZZZZZZ" STREET
"AAAAAAAAAAAAAAAAAAA" STREET
"BBBBBBBBBBBBBBBBBBB" STREET
"CCCCCCCCCCCCCCCCCCC" STREET
"DDDDDDDDDDDDDDDDDDD" STREET
"EEEEEEEEEEEEEEEEEEE" STREET
"FFFFFFFFFFFFFFFFFFF" STREET
"GGGGGGGGGGGGGGGGGGG" STREET
"HHHHHHHHHHHHHHHHHHH" STREET
"IIIIIIIIIIIIIIIIIII" STREET
"JJJJJJJJJJJJJJJJJJJ" STREET
"KKKKKKKKKKKKKKKKKKK" STREET
"LLLLLLLLLLLLLLLLLLL" STREET
"MMMMMMMMMMMMMMMMMMM" STREET
"NNNNNNNNNNNNNNNNNNN" STREET
"OOOOOOOOOOOOOOOOOOO" STREET
"PPPPPPPPPPPPPPPPPPP" STREET
"QQQQQQQQQQQQQQQQQQQ" STREET
"RRRRRRRRRRRRRRRRRRR" STREET
"SSSSSSSSSSSSSSSSSSS" STREET
"TTTTTTTTTTTTTTTTTTT" STREET
"UUUUUUUUUUUUUUUUUUU" STREET
"VVVVVVVVVVVVVVVVVVV" STREET
"WWWWWWWWWWWWWWWWWWW" STREET
"XXXXXXXXXXXXXXXXXXX" STREET
"YYYYYYYYYYYYYYYYYYY" STREET
"ZZZZZZZZZZZZZZZZZZZ" STREET
"AAAAAAAAAAAAAAAAAAAA" STREET
"BBBBBBBBBBBBBBBBBBBB" STREET
"CCCCCCCCCCCCCCCCCCCC" STREET
"DDDDDDDDDDDDDDDDDDDD" STREET
"EEEEEEEEEEEEEEEEEEEE" STREET
"FFFFFFFFFFFFFFFFFFFF" STREET
"GGGGGGGGGGGGGGGGGGGG" STREET
"HHHHHHHHHHHHHHHHHHHH" STREET
"IIIIIIIIIIIIIIIIIIII" STREET
"JJJJJJJJJJJJJJJJJJJJ" STREET
"KKKKKKKKKKKKKKKKKKKK" STREET
"LLLLLLLLLLLLLLLLLLLL" STREET
"MMMMMMMMMMMMMMMMMMMM" STREET
"NNNNNNNNNNNNNNNNNNNN" STREET
"OOOOOOOOOOOOOOOOOOOO" STREET
"PPPPPPPPPPPPPPPPPPPP" STREET
"QQQQQQQQQQQQQQQQQQQQ" STREET
"RRRRRRRRRRRRRRRRRRRR" STREET
"SSSSSSSSSSSSSSSSSSSS" STREET
"TTTTTTTTTTTTTTTTTTTT" STREET
"UUUUUUUUUUUUUUUUUUUU" STREET
"VVVVVVVVVVVVVVVVVVVV" STREET
"WWWWWWWWWWWWWWWWWWWW" STREET
"XXXXXXXXXXXXXXXXXXXX" STREET
"YYYYYYYYYYYYYYYYYYYY" STREET
"ZZZZZZZZZZZZZZZZZZZZ" STREET
"AAAAAAAAAAAAAAAAAAAAA" STREET
"BBBBBBBBBBBBBBBBBBBBB" STREET
"CCCCCCCCCCCCCCCCCCCCC" STREET
"DDDDDDDDDDDDDDDDDDDDD" STREET
"EEEEEEEEEEEEEEEEEEEEE" STREET
"FFFFFFFFFFFFFFFFFFFFF" STREET
"GGGGGGGGGGGGGGGGGGGGG" STREET
"HHHHHHHHHHHHHHHHHHHHH" STREET
"IIIIIIIIIIIIIIIIIIIII" STREET
"JJJJJJJJJJJJJJJJJJJJJ" STREET
"KKKKKKKKKKKKKKKKKKKKK" STREET
"LLLLLLLLLLLLLLLLLLLLL" STREET
"MMMMMMMMMMMMMMMMMMMMM" STREET
"NNNNNNNNNNNNNNNNNNNNN" STREET
"OOOOOOOOOOOOOOOOOOOOO" STREET
"PPPPPPPPPPPPPPPPPPPPP" STREET
"QQQQQQQQQQQQQQQQQQQQQ" STREET
"RRRRRRRRRRRRRRRRRRRRR" STREET
"SSSSSSSSSSSSSSSSSSSSS" STREET
"TTTTTTTTTTTTTTTTTTTTT" STREET
"UUUUUUUUUUUUUUUUUUUUU" STREET
"VVVVVVVVVVVVVVVVVVVVV" STREET
"WWWWWWWWWWWWWWWWWWWWW" STREET
"XXXXXXXXXXXXXXXXXXXXX" STREET
"YYYYYYYYYYYYYYYYYYYYY" STREET
"ZZZZZZZZZZZZZZZZZZZZZ" STREET
"AAAAAAAAAAAAAAAAAAAAAA" STREET
"BBBBBBBBBBBBBBBBBBBBBB" STREET
"CCCCCCCCCCCCCCCCCCCCCC" STREET
"DDDDDDDDDDDDDDDDDDDDDD" STREET
"EEEEEEEEEEEEEEEEEEEEEE" STREET
"FFFFFFFFFFFFFFFFFFFFFF" STREET
"GGGGGGGGGGGGGGGGGGGGGG" STREET
"HHHHHHHHHHHHHHHHHHHHHH" STREET
"IIIIIIIIIIIIIIIIIIIIII" STREET
"JJJJJJJJJJJJJJJJJJJJJJ" STREET
"KKKKKKKKKKKKKKKKKKKKKK" STREET
"LLLLLLLLLLLLLLLLLLLLLL" STREET
"MMMMMMMMMMMMMMMMMMMMMM" STREET
"NNNNNNNNNNNNNNNNNNNNNN" STREET
"OOOOOOOOOOOOOOOOOOOOOO" STREET
"PPPPPPPPPPPPPPPPPPPPPP" STREET
"QQQQQQQQQQQQQQQQQQQQQQ" STREET
"RRRRRRRRRRRRRRRRRRRRRR" STREET
"SSSSSSSSSSSSSSSSSSSSSS" STREET
"TTTTTTTTTTTTTTTTTTTTTT" STREET
"UUUUUUUUUUUUUUUUUUUUUU" STREET
"VVVVVVVVVVVVVVVVVVVVVV" STREET
"WWWWWWWWWWWWWWWWWWWWWW" STREET
"XXXXXXXXXXXXXXXXXXXXXX" STREET
"YYYYYYYYYYYYYYYYYYYYYY" STREET
"ZZZZZZZZZZZZZZZZZZZZZZ" STREET
"AAAAAAAAAAAAAAAAAAAAAAA" STREET
"BBBBBBBBBBBBBBBBBBBBBBB" STREET
"CCCCCCCCCCCCCCCCCCCCCCC" STREET
"DDDDDDDDDDDDDDDDDDDDDDD" STREET
"EEEEEEEEEEEEEEEEEEEEEEE" STREET
"FFFFFFFFFFFFFFFFFFFFFFF" STREET
"GGGGGGGGGGGGGGGGGGGGGGG" STREET
"HHHHHHHHHHHHHHHHHHHHHHH" STREET
"IIIIIIIIIIIIIIIIIIIIIII" STREET
"JJJJJJJJJJJJJJJJJJJJJJJ" STREET
"KKKKKKKKKKKKKKKKKKKKKKK" STREET
"LLLLLLLLLLLLLLLLLLLLLLL" STREET
"MMMMMMMMMMMMMMMMMMMMMMM" STREET
"NNNNNNNNNNNNNNNNNNNNNNN" STREET
"OOOOOOOOOOOOOOOOOOOOOOO" STREET
"PPPPPPPPPPPPPPPPPPPPPPP" STREET
"QQQQQQQQQQQQQQQQQQQQQQQ" STREET
"RRRRRRRRRRRRRRRRRRRRRRR" STREET
"SSSSSSSSSSSSSSSSSSSSSSS" STREET
"TTTTTTTTTTTTTTTTTTTTTTT" STREET
"UUUUUUUUUUUUUUUUUUUUUUU" STREET
"VV

EXHIBIT B

Form of BNSF Plan Approval

Gerald Maczuga
Project Engineer

BNSF Railway Company
201 N 7th St
Lincoln, NE 68508
402-458-7537 (office)
402-458-4376 (fax)
Gerald.Maczuga@BNSF.com

Date: _____

Ernest R. Peo, III
City of Lincoln, Nebraska
555 South 10th Street
Lincoln, NE 68508
Attn: Chief Assistant City Attorney

Re: Review of Plans and Specifications dated September 2, 2010, drafted by Olsson Associates (hereinafter called the "**Plans and Specifications**")

Dear Mr. Peo:

This letter serves as BNSF Railway Company's ("**BNSF**") response to its review of the Plans and Specifications covering the construction of the West Haymarket Utility Relocation - Project Number 870501. BNSF has reviewed these plans and no exceptions are taken. BNSF has not reviewed the design details or calculations for structural integrity or engineering accuracy. BNSF accepts no responsibility for errors or omissions in the design of the project. These comments are given to the City of Lincoln, Nebraska ("**City**") pursuant to Section 3.1.1 of that certain Construction and Maintenance Agreement between BNSF and City, dated _____, 2010. If the Plans and Specifications are revised by City subsequent to the date set forth above, this letter shall no longer serve as BNSF's written comments and City must resubmit said Plans and Specifications to BNSF for review.

Regards,

Gerald Maczuga
Project Engineer

EXHIBIT C

Contractor Requirements

1.01 General

- **1.01.01** The Contractor must cooperate with **BNSF RAILWAY COMPANY**, hereinafter referred to as "Railway" during the performance of the C&M Work (as defined in Exhibit C-1) and any other work over, under, on or adjacent to Railway Property.

- **1.01.02** The Contractor must execute and deliver to the Railway duplicate copies of the Exhibit C-1 Contractor Right of Entry for C&M Work, in the form attached hereto, obligating the Contractor to provide and maintain in full force and effect the insurance called for under Section 3 of said Exhibit C-1. Questions regarding procurement of the Railroad Protective Liability Insurance should be directed to Rosa Martinez at Marsh, USA, 214-303-8519.

- **1.01.03** The Contractor must plan, schedule and conduct all C&M Work activities so as not to interfere with the movement of any trains on Railway Property.

- **1.01.04** The Contractor's right to enter Railway Property is subject to the absolute right of Railway to cause the Contractor's work on Railway Property to cease if, in the opinion of Railway, Contractor's activities create a hazard to Railway Property, employees, and/or operations. Railway will have the right to stop construction work on the C&M Work if any of the following events take place: (i) Contractor (or any of its subcontractors) performs the C&M Work in a manner contrary to the plans and specifications approved by Railway; (ii) Contractor (or any of its subcontractors), in Railway's opinion, prosecutes the C&M Work in a manner which is hazardous to Railway Property, facilities or the safe and expeditious movement of railroad traffic; or (iii) the insurance described in the attached Exhibit C-1 is canceled during the course of the C&M Work. The work stoppage will continue until all necessary actions are taken by Contractor or its subcontractor to rectify the situation to the satisfaction of Railway's Division Engineer or until additional insurance has been delivered to and accepted by Railway. Any such work stoppage under this provision will not give rise to any liability on the part of Railway. Railway's right to stop the C&M Work is in addition to any other rights Railway may have including, but not limited to, actions or suits for damages or lost profits. In the event that Railway desires to stop the C&M Work, Railway agrees to immediately notify the following individual in writing:

  Roger Figard, City Engineer
  Department of Public Works and Utilities
  City of Lincoln, Nebraska
  555 South 10th Street
  Lincoln, NE 68508

- **1.01.05** Contractor shall, and shall cause all Contractor parties to, strictly comply with all federal, state and local environmental laws and regulations in its use of Railway's Property, including, but not limited to, the Resource Conservation and Recovery Act, as amended (RCRA), the Clean Water Act, the Oil Pollution Act, the Hazardous Materials Transportation Act, CERCLA (collectively, the "**Environmental Laws**") with respect to Railway's Property. Contractor shall not maintain a "treatment," "storage," "transfer" or "disposal" facility, or "underground storage tank," as those terms are defined by Environmental Laws, on Railway's Property. Contractor shall not handle, transport, release or suffer the release of "hazardous

waste" or "hazardous substances", as "hazardous waste" and "hazardous substances" may now or in the future be defined by any Environmental Laws, except as may be pre-existing in Railway Property and as encountered in the C&M Work and then only in compliance with Environmental Laws, and shall not use any soils or other materials containing hazardous waste or hazardous substances in connection with the C&M Work, or otherwise bring any hazardous waste or hazardous substances onto any Railway Property.

Contractor shall give Railway immediate notice to Railway's Resource Operations Center at (800) 832-5452 in the event of any release of hazardous substances on or from Railway Property, violation of Environmental Laws, or inspection or inquiry by governmental authorities charged with enforcing Environmental Laws with respect to Contractor's use of Railway Property. Contractor shall use best efforts to promptly respond to any release arising from or related to its activities contemplated in the C&M Work. Contractor shall also give Railway notice of all measures undertaken on Contractor's behalf to investigate, remediate, respond to or otherwise cure such release or violation.

In the event Contractor has notice of a release or violation of Environmental Laws which occurred or may occur as a result of Contractor's activities contemplated in the C&M Work, Contractor shall take timely measures to investigate, remediate, respond to or otherwise cure as required by applicable law such release or violation affecting Railway Property or improvements. If during the C&M Work, soils or other materials considered to be environmentally contaminated are exposed, Contractor will remove and safely dispose of said contaminated soils. Determination of soils contamination and applicable disposal procedures thereof will be made only by an agency having the capacity and authority to make such a determination.

Contractor agrees to periodically to furnish Railway upon written request with reasonable proof that it is in compliance with this **Section 1.01.05**.

- **1.01.06** All C&M Work must performed (i) in a good and workmanlike manner, (ii) in accordance with plans and specifications approved in advance by Railway (the "**Approved Plans**"), (iii) in conformance with applicable building codes and all applicable engineering, safety and any and all laws, statutes, regulations, ordinances, orders, covenants, restrictions, or decisions of any court of competent jurisdiction ("**Legal Requirements**"), (iv) in accordance with the accepted industry standards of care, skill and diligence, and (v) in such a manner as shall not adversely affect the structural integrity or maintenance of any Railway improvements or other improvements on or near Railway Property, or any lateral support of any structures adjacent to or in the proximity of any Railway improvements or Railway Property. In addition, the C&M Work must be promptly commenced by the Contractor and thereafter diligently prosecuted to conclusion in its logical order and sequence. Furthermore, any changes or modifications of the C&M Work which affect Railway will be subject to Railway's written approval prior to the commencement of any such changes or modifications from the Railway's Project Engineer.

- **1.01.07** Contractor shall be responsible for all job site cleanup and restoration, including removal of all construction materials, concrete debris, surplus soil, refuse, contaminated soils, asphalt debris, litter and other waste materials resulting from the C&M Work to the reasonable satisfaction of Railway's Division Engineer.

- **1.01.08** The Contractor must notify the City at City's City Engineer, telephone number (402) 441-7567 and Railway's Project Engineer, telephone number (402) 458-7537 at least ten (10) calendar days before commencing any C&M Work on Railway Property.

- **1.01.09** For any bridge demolition and/or falsework above any tracks or any excavations located with any part of the excavations located within, whichever is greater, twenty-five (25) feet of the nearest track or intersecting a slope from the plane of the top of rail on a 2 horizontal to 1 vertical slope beginning at eleven (11) feet from centerline of the nearest track, both measured perpendicular to center line of track, the Contractor must furnish the Railway five sets of working drawings showing details of construction affecting Railway Property and tracks. The working drawing must include the proposed method of installation and removal of falsework, shoring or cribbing, not included in the contract plans and two sets of structural calculations of any falsework, shoring or cribbing. For all excavation and shoring submittal plans, the current "BNSF-UPRR Guidelines for Temporary Shoring" must be used for determining the design loading conditions to be used in shoring design, and all calculations and submittals must be in accordance with the current "BNSF-UPRR Guidelines for Temporary Shoring". All submittal drawings and calculations must be stamped by a registered professional engineer licensed to practice in the state the project is located. All calculations must take into consideration railway surcharge loading and must be designed to meet American Railway Engineering and Maintenance-of-Way Association (previously known as American Railway Engineering Association) Coopers E-80 live loading standard. All drawings and calculations must be stamped by a registered professional engineer licensed to practice in the state the project is located. The Contractor must not begin C&M Work until notified by the Railway that plans have been approved, which approved plans shall become part of the Approved Plans. The Contractor will be required to use lifting devices such as, cranes and/or winches to place or to remove any falsework over Railway's tracks. In no case will the Contractor be relieved of responsibility for results obtained by the implementation of the Approved Plans.

- **1.01.10** Subject to the movement of Railway's trains, Railway will cooperate with the *Contractor such that the C&M Work may be handled and performed in an efficient manner.* The Contractor will have no claim whatsoever for any type of damages or for extra or additional compensation in the event his work is delayed by the Railway.

1.02 Contractor Safety Orientation

- **1.02.01 No employee of the Contractor, its subcontractors, agents or invitees may enter Railway Property without first having completed Railway's Engineering Contractor Safety Orientation, found on the web site www.contractororientation.com. The Contractor must ensure that each of its employees, subcontractors, agents or invitees completes Railway's Engineering Contractor Safety Orientation through internet sessions before any C&M Work is performed. Additionally, the Contractor must ensure that each and every one of its employees, subcontractors, agents or invitees possesses a card certifying completion of the Railway's Engineering Contractor Safety Orientation before entering Railway Property. The Contractor is responsible for the cost of the Railway's Engineering Contractor Safety Orientation. The Contractor must renew the Railway's Engineering Contractor Safety Orientation annually. Further clarification can be found on the web site or from the Railway's Project Engineer.**

1.03 Railway Requirements

- **1.03.01** The Contractor must take protective measures as are necessary to keep railway facilities, including track ballast, free of sand, debris, and other foreign objects and materials resulting from his operations. Any damage to railway facilities resulting from Contractor's

operations will be repaired or replaced by Railway and the cost of such repairs or replacement must be paid for by the Contractor.

- **1.03.02** The Contractor must notify Railway's Project Engineer, telephone number (402) 458-7537, and provide blasting plans to the Railway for review seven (7) calendar days prior to conducting any blasting operations adjacent to or on Railway Property.

- **1.03.03** The Contractor must abide by the following temporary clearances during construction:

  - 15' Horizontally from centerline of nearest track
  - 21'-6" Vertically above top of rail
  - 27'-0" Vertically above top of rail for electric wires carrying less than 750 volts
  - 28'-0" Vertically above top of rail for electric wires carrying 750 volts to 15,000 volts
  - 30'-0" Vertically above top of rail for electric wires carrying 15,000 volts to 20,000 volts
  - 34'-0" Vertically above top of rail for electric wires carrying more than 20,000 volts

- **1.03.04** Upon completion of construction, the following clearances shall be maintained:

  - 25' Horizontally from centerline of nearest existing or future track to the face of the pier or abutment structure
  - 31' Vertically above top of rail to the bottom of the Pedestrian Bridge

- **1.03.05** Any infringement within State statutory clearances due to the Contractor's operations must be submitted to the Railway and to the City and must not be undertaken until approved in writing by the Railway, and until the City has obtained any necessary authorization from the State Regulatory Authority for the infringement. No extra compensation will be allowed in the event the Contractor's C&M Work is delayed pending Railway approval, and/or the State Regulatory Authority's approval.

- **1.03.06** In the case of impaired vertical clearance above top of rail, Railway will have the option of installing tell-tales or other protective devices Railway deems necessary for protection of Railway operations. The cost of tell-tales or protective devices will be borne by the Contractor.

- **1.03.07** The details of construction affecting the Railway Property and tracks not included in the City Work Final Design or Approved Plans for the C&M Work must be submitted to the Railway by the City for approval before work is undertaken and this work must not be undertaken until approved by the Railway.

- **1.03.08** At other than public road crossings, the Contractor must not move any equipment or materials across Railway's tracks until permission has been obtained from the Railway. The Contractor must obtain a "Temporary Construction Crossing Agreement" from the Railway prior to moving his equipment or materials across Railway's tracks. The temporary crossing must be gated and locked at all times when not required for use by the Contractor. The temporary crossing for use of the Contractor will be constructed and, at the completion of the project, removed at the expense of the Contractor.

- **1.03.09** Discharge, release or spill on the Railway Property of any hazardous substances, oil, petroleum, constituents, pollutants, contaminants, or any hazardous waste is prohibited

and Contractor must immediately notify the Railway's Resource Operations Center at 1(800) 832-5452, of any discharge, release or spills in excess of a reportable quantity. Contractor must not allow Railway Property to become a treatment, storage or transfer facility as those terms are defined in the Resource Conservation and Recovery Act or any state analogue.

- **1.03.10** The Contractor, upon completion of the C&M Work, must promptly remove from the Railway Property all of Contractor's tools, equipment, implements and other materials, whether brought upon said Railway Property by Contractor or any subcontractor, employee or agent of Contractor or of any subcontractor, and must cause Railway Property to be left in a condition acceptable to Railway's Project Engineer.

1.04 Contractor Roadway Worker on Track Safety Program and Safety Action Plan

- **1.04.01** Each Contractor that will perform C&M Work within 25 feet of the centerline of a track must develop and implement a Roadway Worker Protection/On Track Safety Program and work with Railway's Project Engineer to develop an on track safety strategy as described in the guidelines listed in the on track safety portion of the Safety Orientation. This Program must provide Roadway Worker protection/on track training for all employees of the Contractor, its subcontractors, agents or invitees. This training is reinforced at the job site through job safety briefings. Additionally, each Contractor must develop and implement the Safety Action Plan, as provided for on the web site **www.contractororientation.com**, which will be made available to Railway prior to commencement of any work on Railway Property. During the performance of C&M Work, the Contractor must audit its C&M Work activities. The Contractor must designate an on-site Project Supervisor who will serve as the contact person for the Railway and who will maintain a copy of the Safety Action Plan, safety audits, and Material Safety Datasheets (MSDS), at the job site.

  Contractors shall ensure its employees, subcontractors and agents are United States citizens or legally working in this country under a work VISA.

1.05 Railway Flagger Services:

- **1.05.01** The Contractor must give Railway's Project Engineer, telephone number (402) 458-7537, a minimum of thirty (30) calendar days advance notice when flagging services will be required so that the Roadmaster can make appropriate arrangements (i.e., bulletin the flagger's position). If flagging services are scheduled in advance by the Contractor and it is subsequently determined by the parties hereto that such services are no longer necessary, the Contractor must give the Roadmaster five (5) working days advance notice so that appropriate arrangements can be made to abolish the position pursuant to union requirements.

- **1.05.02** Unless determined otherwise by Railway's Project Engineer, Railway flagger will be required and furnished when Contractor's C&M Work activities are located over, under and/or within twenty-five (25) feet measured horizontally from centerline of the nearest track and when cranes or similar equipment positioned beyond 25-feet from the track centerline could foul the track in the event of tip over or other catastrophic occurrence, but not limited thereto for the following conditions:

- **1.05.02a** When, upon inspection by Railway's Project Engineer, other conditions warrant.

- **1.05.02b** When any excavation is performed below the bottom of tie elevation, if, in the opinion of Railway's Project Engineer, track or other Railway facilities may be subject to movement or settlement.

- **1.05.02c** When C&M Work in any way interferes with the safe operation of trains at timetable speeds.

- **1.05.02d** When any hazard is presented to Railway track, communications, signal, electrical, or other facilities either due to persons, material, equipment or blasting in the vicinity.

- **1.05.02e** Special permission must be obtained from the Railway before moving heavy or cumbersome objects or equipment which might result in making the track impassable.

- **1.05.03** Flagging services will be performed by qualified Railway flaggers.

- **1.05.03a** Flagging crew generally consists of one employee. However, additional personnel may be required to protect Railway Property and operations, if deemed necessary by Railway's Project Engineer.

- **1.05.03b** Each time a flagger is called, the minimum period for billing will be the eight (8) hour basic day.

- **1.05.03c** The cost of flagger services provided by the Railway will be borne by City. The estimated cost for one (1) flagger is approximately between $800.00-$1,600.00 for an eight (8) hour basic day with time and one-half or double time for overtime, rest days and holidays. The estimated cost for each flagger includes vacation allowance, paid holidays, Railway and unemployment insurance, public liability and property damage insurance, health and welfare benefits, vehicle, transportation, meals, lodging, radio, equipment, supervision and other costs incidental to performing flagging services. Negotiations for Railway labor or collective bargaining agreements and rate changes authorized by appropriate Federal authorities may increase actual or estimated flagging rates. **THE GOVERNMENTAL FLAGGING RATE IN EFFECT AT THE TIME OF PERFORMANCE BY THE CONTRACTOR HEREUNDER WILL BE USED TO CALCULATE THE ACTUAL COSTS OF FLAGGING PURSUANT TO THIS PARAGRAPH.**

- **1.05.03d** The average train traffic on this route is 65 freight trains per 24-hour period at a timetable speed of 40 MPH and 2 passenger trains at a timetable speed of 15 MPH.

1.06 Contractor General Safety Requirements

- **1.06.01 C&M Work in the proximity of railway track(s) is potentially hazardous where movement of trains and equipment can occur at any time and in any direction. All work performed by contractors within 25 feet of any track must be in compliance with FRA Roadway Worker Protection Regulations. No Contractor shall conduct any tests, investigations or any other activity using mechanized equipment and/or machinery, or place or store any mechanized equipment, tools or other materials, within twenty-five (25) feet of the centerline of any railroad track on Railway Property, except after Contractor has obtained written approval from Railway Director Engineering Services, and then only in strict accordance with the terms and any conditions of such approval.**

- **1.06.02 Before beginning any task on Railway Property, a thorough job safety briefing must be conducted with all personnel involved with the task and repeated when the**

personnel or task changes. If the task is within 25 feet of any track, the job briefing must include the Railway's flagger, as applicable, and include the procedures the Contractor will use to protect its employees, subcontractors, agents or invitees from moving any equipment adjacent to or across any Railway track(s).

- **1.06.03 Workers must not work within 25 feet of the centerline of any track without an on track safety strategy approved by Railway's Project Engineer. When authority is provided, every contractor employee must know: (1) who the Railway flagger is, and how to contact the flagger, (2) limits of the authority, (3) the method of communication to stop and resume work, and (4) location of the designated places of safety. Persons or equipment entering flag/work limits that were not previously job briefed, must notify the flagger immediately, and be given a job briefing when working within 25 feet of the center line of track.**

- **1.06.04 When Contractor employees are required to work on Railway Property after normal working hours or on weekends, Railway's Project Engineer must be notified. A minimum of two employees must be present at all times.**

- **1.06.05** Any employees, agents or invitees of Contractor or its subcontractors under suspicion of being under the influence of drugs or alcohol, or in the possession of same, will be removed from the Railway Property and subsequently released to the custody of a representative of Contractor management. Future access to the Railway Property by that employee will be denied.

- **1.06.06** Any damage to Railway Property, or any hazard noticed on passing trains must be reported immediately to the Railway's Project Engineer. Any vehicle or machine which may come in contact with track, signal equipment, or structure (bridge) and could result in a train derailment must be reported immediately to the Railway's Project Engineer and to the Railway's Resource Operations Center at 1 (800) 832-5452. Local emergency numbers are to be obtained from Railway's Project Engineer prior to the start of any C&M Work and must be posted at the job site.

- **1.06.07** For safety reasons, all persons are prohibited from having pocket knives, firearms or other deadly weapons in their possession while working on Railway Property.

- **1.06.08** All personnel protective equipment (PPE) used on Railway Property must meet applicable OSHA and ANSI specifications. Current Railway personnel protective equipment requirements are listed on the web site, **www.contractororientation.com,** however, a partial list of the requirements include: a) safety glasses with permanently affixed side shields (no yellow lenses); b) hard hats c) safety shoe with: hardened toes, above-the-ankle lace-up and a defined heel; and d) high visibility retro-reflective work wear. The Railway's Project Engineer is to be contacted regarding local specifications for meeting requirements relating to hi-visibility work wear. Hearing protection, fall protection, gloves, and respirators must be worn as required by State and Federal regulations. **(NOTE – Should there be a discrepancy between the information contained on the web site and the information in this paragraph, the web site will govern.)**

- **1.06.09 THE CONTRACTOR MUST NOT PILE OR STORE ANY MATERIALS, MACHINERY OR EQUIPMENT CLOSER THAN 25'-0" TO THE CENTER LINE OF THE NEAREST RAILWAY TRACK. MATERIALS, MACHINERY OR EQUIPMENT MUST NOT BE STORED OR LEFT WITHIN 250 FEET OF ANY HIGHWAY/RAIL AT-GRADE CROSSINGS OR TEMPORARY CONSTRUCTION CROSSING, WHERE STORAGE OF**

THE SAME WILL OBSTRUCT THE VIEW OF A TRAIN APPROACHING THE CROSSING. PRIOR TO BEGINNING WORK, THE CONTRACTOR MUST ESTABLISH A STORAGE AREA WITH CONCURRENCE OF THE RAILWAY'S PROJECT ENGINEER.

- **1.06.10** Machines or vehicles must not be left unattended with the engine running. Parked machines or equipment must be in gear with brakes set and if equipped with blade, pan or bucket, they must be lowered to the ground. All machinery and equipment left unattended on Railway Property must be left inoperable and secured against movement. (See internet Engineering Contractor Safety Orientation program for more detailed specifications)

- **1.06.11** Workers must not create and leave any conditions at the work site that would interfere with water drainage. Any C&M Work performed over water must meet all Federal, State and Local regulations.

- **1.06.12** All power line wires must be considered dangerous and of high voltage unless informed to the contrary by proper authority. For all power lines the minimum clearance between the lines and any part of the equipment or load must be; 200 KV or below - 15 feet; 200 to 350 KV - 20 feet; 350 to 500 KV - 25 feet; 500 to 750 KV - 35 feet; and 750 to 1000 KV - 45 feet. If capacity of the line is not known, a minimum clearance of 45 feet must be maintained. A person must be designated to observe clearance of the equipment and give a timely warning for all operations where it is difficult for an operator to maintain the desired clearance by visual means.

1.07 Excavation

- **1.07.01** Before excavating, the Contractor must determine whether any underground pipe lines, electric wires, or cables, including fiber optic cable systems are present and located within the C&M Work area. The Contractor must determine whether excavation on Railway Property could cause damage to buried cables resulting in delay to Railway traffic and disruption of service to users. Delays and disruptions to service may cause business interruptions involving loss of revenue and profits. Before commencing excavation, the Contractor must contact Railway's Project Engineer, telephone number (402) 458-7537. All underground and overhead wires will be considered HIGH VOLTAGE and dangerous until verified with the company having ownership of the line. **It is the Contractor's responsibility to notify any other companies that have underground utilities in the area and arrange for the location of all underground utilities before excavating.**

- **1.07.02** The Contractor must cease all work and notify Railway immediately before continuing excavation in the area if obstructions are encountered which do not appear on drawings. If the obstruction is a utility and the owner of the utility can be identified, then the Contractor must also notify the owner immediately. If there is any doubt about the location of underground cables or lines of any kind, no work must be performed until the exact location has been determined. There will be no exceptions to these instructions.

- **1.07.03** All excavations must be conducted in compliance with applicable OSHA regulations and, regardless of depth, must be shored where there is any danger to tracks, structures or personnel.

- **1.07.04** Any excavations, holes or trenches on Railway Property must be covered, guarded and/or protected when not being worked on. When leaving work site areas at night and over weekends, the areas must be secured and left in a condition that will ensure that Railway

employees and other personnel who may be working or passing through the area are protected from all hazards. All excavations must be back filled as soon as possible.

- **1.07.05** Contractor will be responsible at no cost to Railway to locate and make any adjustments necessary to any wire lines, pipe lines, or other utilities, fences, buildings, improvements or other facilities located within Railway Property (collectively, "**Other Improvements**"). Contractor must contact the owner(s) of the Other Improvements notifying them of any work that may damage these Other Improvements and/or interfere with their service and, if required, obtain the owner's written approval prior to so affecting the Other Improvements. Contractor must mark all Railway improvements and Other Improvements on the applicable Approved Plans or other plans and specifications approved in advance by Railway, and mark all Railway improvements and Other Improvements in the field in order to verify their locations. Contractor must also use all reasonable methods when working on or near Railway Property to determine if any Railway improvements or Other Improvements (fiber optic, cable, communication or otherwise) may exist. Failure to mark or identify any Railway improvements or Other Improvements will be sufficient cause for Railway to stop construction at no cost to Railway until such items are completed. Contractor must make all adjustments and other work described in this Section 1.07.05, including without limitation adjustments to Other Improvements and work on and affecting Railway Property, in a manner that does not adversely impact utility service to Railway.

1.08 Hazardous Waste, Substances and Material Reporting

- **1.08.01** If Contractor discovers any hazardous waste, hazardous substance, petroleum or other deleterious material, including but not limited to any non-containerized commodity or material, on or adjacent to Railway Property, in or near any surface water, swamp, wetlands or waterways, while performing any work under this Agreement, Contractor must immediately: (a) notify the Railway's Resource Operations Center at 1 (800) 832-5452, of such discovery: (b) take safeguards necessary to protect its employees, subcontractors, agents and/or third parties: and (c) exercise due care with respect to the release, including the taking of any appropriate measure to minimize the impact of such release.

1.09 Personal Injury Reporting

- **1.09.01** The Railway is required to report certain injuries as a part of compliance with Federal Railroad Administration (FRA) reporting requirements. Any personal injury sustained by an employee of the Contractor, subcontractor or Contractor's invitees while on the Railway Property must be reported immediately (by phone mail if unable to contact in person) to the Railway's Project Engineer. The Non-Employee Personal Injury Data Collection Form contained herein is to be completed and sent by Fax to the Railway at 1 (817) 352-7595 and to the Railway's Project Engineer no later than the close of shift on the date of the injury.

NON-EMPLOYEE PERSONAL INJURY DATA COLLECTION

INFORMATION REQUIRED TO BE COLLECTED PURSUANT TO FEDERAL REGULATION. IT SHOULD BE USED FOR COMPLIANCE WITH FEDERAL REGULATIONS ONLY AND IS NOT INTENDED TO PRESUME ACCEPTANCE OF RESPONSIBILITY OR LIABILITY.

1. Accident City/St
2. Date: _____ Time: _____ County:
3. Temperature:
4. Weather
   (if non-Railway location)

5. Social Security #

6. Name (last, first, mi)

7. Address: Street: _____ City: St._____ Zip:

8. Date of Birth: _____ and/or Age _____ Gender:
   (if available)

9. (a) Injury: _____ (b) Body Part:
   (i.e. (a) Laceration (b) Hand)

11. Description of Accident (To include location, action, result, etc.):

12. Treatment:
    __ First Aid Only
    __ Required Medical Treatment
    __ Other Medical Treatment

13. Dr. Name _____ 30. Date: _____

14. Dr. Address:
    Street: _____ City: _____ St: _____ Zip: _____

15. Hospital Name:

16. Hospital Address:
    Street: _____ City: _____ St: _____ Zip: _____

17. Diagnosis:

FAX TO RAILWAY AT (817) 352-7595
AND COPY TO RAILWAY ROADMASTER FAX

EXHIBIT C-1(A)

CONTRACTOR'S RIGHT OF ENTRY
For C&M Work

BNSF RAILWAY COMPANY
Attention: Project Engineer

Gentlemen:

The undersigned (hereinafter, the "**Contractor**"), has entered into a contract (the "**Contract**") dated _____, 20_ with the City of Lincoln, Nebraska ("**City**") for the performance of certain work ("**C&M Work**") in connection with the construction of entertainment, recreation, lodging, offices, retail and/or other complementary and/or supporting facilities in Lincoln, Nebraska (collectively, the "**West Haymarket Project**"). The work to be performed under this Agreement is deemed to be "City C&M Work" (as defined in that certain Construction and Maintenance Agreement ["**C&M Agreement**"] dated _____, 2010, between BNSF Railway Company and the City). Performance of such C&M Work will necessarily require Contractor to enter BNSF RAILWAY COMPANY ("**Railway**") right of way and property ("**Railway Property**"). The Contract provides that no C&M Work will be commenced within Railway Property until the Contractor employed in connection with said C&M Work for the **City of Lincoln, Nebraska** (i) executes and delivers to Railway an Agreement in the form hereof, and (ii) provides insurance of the coverage and limits specified in such Agreement and Section 3 herein. If this Agreement is executed by a party who is not the Owner, General Partner, President or Vice President of Contractor, Contractor must furnish evidence to Railway certifying that the signatory is empowered to execute this Agreement on behalf of Contractor.

Accordingly, in consideration of Railway granting permission to Contractor to enter upon Railway Property and as an inducement for such entry, Contractor, effective on the date of the Contract, has agreed and does hereby agree with Railway as follows:

Section 1. RELEASE OF LIABILITY AND INDEMNITY

TO THE FULLEST EXTENT PERMITTED BY LAW, CONTRACTOR SHALL RELEASE, INDEMNIFY, DEFEND AND HOLD HARMLESS RAILWAY AND RAILWAY'S AFFILIATED COMPANIES, PARTNERS, SUCCESSORS, ASSIGNS, LEGAL REPRESENTATIVES, OFFICERS, DIRECTORS, SHAREHOLDERS, EMPLOYEES AND AGENTS FOR, FROM AND AGAINST ANY AND ALL CLAIMS, LIABILITIES, FINES, PENALTIES, COSTS, DAMAGES, LOSSES, LIENS, CAUSES OF ACTION, SUITS, DEMANDS, JUDGMENTS AND EXPENSES (INCLUDING, WITHOUT LIMITATION, COURT COSTS AND ATTORNEYS' FEES) OF ANY NATURE, KIND OR DESCRIPTION OF ANY PERSON (INCLUDING, WITHOUT LIMITATION, THE EMPLOYEES OF THE PARTIES HERETO) OR ENTITY DIRECTLY OR INDIRECTLY (COLLECTIVELY, "LIABILITIES") ARISING OUT OF, RESULTING FROM OR CAUSALLY RELATED TO (IN WHOLE OR IN PART):

(i) ANY RIGHTS OR INTERESTS GRANTED TO CONTRACTOR PURSUANT TO THIS AGREEMENT;

(ii) THE USE, OCCUPANCY OR PRESENCE OF CONTRACTOR AND CONTRACTOR PARTIES (DEFINED BELOW) AND/OR ANY WORK PERFORMED BY CONTRACTOR AND CONTRACTOR PARTIES IN, ON, OR ABOUT RAILWAY'S PROPERTY OR RIGHT-OF-WAY AND/OR THE WEST HAYMARKET PROJECT, INCLUDING, WITHOUT LIMITATION, OPERATION OF THE PEDESTRIAN BRIDGE, SECURITY FENCING, OR STORM WATER MITIGATION BY ANY CONTRACTOR PARTY (DEFINED BELOW);

(iii) ANY ENVIRONMENTAL MATTERS ARISING FROM CONTRACTOR AND/OR CONTRACTOR PARTIES' USE AND OCCUPANCY OF RAILWAY'S RIGHT-OF-WAY OR OTHER RAILWAY PROPERTY, INCLUDING WITHOUT LIMITATION USE AND OCCUPANCY OF RAILWAY'S RIGHT-OF-WAY OR OTHER RAILWAY PROPERTY IN CONNECTION WITH PERFORMANCE OF THE C&M WORK;

(iv) ANY DAMAGE TO OR DESTRUCTION OF ANY TELECOMMUNICATION LINES IN CONNECTION WITH THE WEST HAYMARKET PROJECT BY CONTRACTOR AND/OR CONTRACTOR PARTIES, INCLUDING BUT NOT LIMITED TO (A) ANY INJURY TO OR DEATH OF ANY PERSON EMPLOYED BY OR ON BEHALF OF ANY TELECOMMUNICATIONS COMPANY, AND/OR ITS CONTRACTORS, AGENTS AND/OR EMPLOYEES AS A RESULT OF SUCH DAMAGE OR DESTRUCTION, AND/OR (B) ANY CLAIM OR CAUSE OF ACTION FOR ALLEGED LOSS OF PROFITS OR REVENUE BY, OR LOSS OF SERVICE BY A CUSTOMER OR USER OF SUCH TELECOMMUNICATION COMPANY(IES) AS A RESULT OF SUCH DAMAGE OR DESTRUCTION;

(v) CONTRACTOR'S BREACH OF THE TERMS AND CONDITIONS OF THIS AGREEMENT; OR

(vi) ANY ACT OR OMISSION OF CONTRACTOR OR ITS OFFICERS, AGENTS, INVITEES, EMPLOYEES OR SUBCONTRACTORS (SUCH OFFICERS, AGENTS, INVITEES, EMPLOYEES AND SUBCONTRACTORS BEING REFERRED TO HEREIN INDIVIDUALLY AS A "CONTRACTOR PARTY" AND COLLECTIVELY, "CONTRACTOR PARTIES"), OR ANYONE DIRECTLY OR INDIRECTLY EMPLOYED BY ANY OF THEM, OR ANYONE THEY CONTROL OR EXERCISE CONTROL OVER.

THE LIABILITY ASSUMED BY CONTRACTOR WILL NOT BE AFFECTED BY THE FACT, IF IT IS A FACT, THAT ANY DAMAGE, DESTRUCTION, INJURY OR DEATH WAS OCCASIONED BY OR CONTRIBUTED TO BY THE NEGLIGENCE OF RAILWAY, ITS AGENTS, SERVANTS, EMPLOYEES OR OTHERWISE, BUT EXCLUDING CLAIMS WHOLLY CAUSED BY RAILWAY'S SOLE NEGLIGENCE AND EXCLUDING CLAIMS TO THE EXTENT THAT SUCH CLAIMS ARE CAUSED BY THE WILLFUL MISCONDUCT OR GROSS NEGLIGENCE OF RAILWAY.

FURTHER, TO THE FULLEST EXTENT PERMITTED BY LAW, CONTRACTOR AGREES, REGARDLESS OF ANY NEGLIGENCE OR ALLEGED NEGLIGENCE OF RAILWAY, TO INDEMNIFY, DEFEND AND HOLD HARMLESS RAILWAY AGAINST AND ASSUME THE DEFENSE OF ANY LIABILITIES ASSERTED AGAINST OR SUFFERED BY RAILWAY UNDER OR RELATED TO THE FEDERAL EMPLOYERS' LIABILITY ACT ("FELA") WHENEVER EMPLOYEES OF CONTRACTOR OR ANY CONTRACTOR PARTY CLAIM OR ALLEGE THAT THEY ARE EMPLOYEES OF RAILWAY OR OTHERWISE. THIS INDEMNITY SHALL ALSO EXTEND, ON THE SAME BASIS, TO FELA CLAIMS BASED ON ACTUAL OR ALLEGED VIOLATIONS OF ANY FEDERAL, STATE OR LOCAL LAWS OR REGULATIONS, INCLUDING BUT NOT LIMITED TO THE SAFETY APPLIANCE ACT, THE LOCOMOTIVE INSPECTION ACT, THE OCCUPATIONAL SAFETY AND HEALTH ACT, THE RESOURCE

CONSERVATION AND RECOVERY ACT, AND ANY SIMILAR STATE OR FEDERAL STATUTE.

Contractor further agrees, at its expense, in the name and on behalf of Railway, that it will adjust and settle all Liabilities against Railway, and will, at Railway's discretion, appear and defend any suits or actions of law or in equity brought against Railway on any claim or cause of action arising out of any liability assumed by Contractor under this Agreement for which Railway is liable or is alleged to be liable. Railway will give notice to Contractor, in writing, of the receipt or dependency of such claims and thereupon Contractor must proceed to adjust and handle to a conclusion such claims, and in the event of a suit being brought against Railway, Railway may forward summons and complaint or other process in connection therewith to Contractor, and Contractor, at Railway's discretion, must defend, adjust, or settle such suits and protect, indemnify, and save harmless Railway from and against all Liabilities arising out of any such claims or suits, provided that the foregoing indemnification obligations do not include Liabilities arising wholly out of the sole negligence of Railway or to the extent caused by the gross negligence or willful misconduct of Railway.

In addition to any other provision of this Agreement, in the event that all or any portion of this Article shall be deemed to be inapplicable for any reason, including without limitation as a result of a decision of an applicable court, legislative enactment or regulatory order, the parties agree that this Article shall be interpreted as requiring Contractor to indemnify Railway to the fullest extent permitted by applicable law. **THROUGH THIS AGREEMENT THE PARTIES EXPRESSLY INTEND FOR CONTRACTOR TO INDEMNIFY RAILWAY FOR RAILWAY'S ACTS OF NEGLIGENCE, BUT EXCLUDING CLAIMS WHOLLY CAUSED BY RAILWAY'S SOLE NEGLIGENCE AND EXCLUDING CLAIMS TO THE EXTENT THAT SUCH CLAIMS ARE CAUSED BY THE WILLFUL MISCONDUCT OR GROSS NEGLIGENCE OF RAILWAY.**

It is mutually understood and agreed that the assumption of liabilities and indemnification provided for in this Agreement survive any termination of this Agreement.

Section 2. TERM

This Agreement is effective from the date of the Contract until (i) the completion of the project set forth herein, and (ii) full and complete payment to Railway of any and all sums or other amounts owing and due hereunder.

Section 3. INSURANCE

Contractor must, at its sole cost and expense, procure and maintain during the life of this Agreement the following insurance coverage:

A. Commercial General Liability Insurance. This insurance shall contain broad form contractual liability with a combined single limit of a minimum of $5,000,000.00 per occurrence, and $10,000,000.00 in the aggregate, but in no event less than the amount otherwise carried by the Contractor. Coverage must be purchased on a post 1998 ISO occurrence form or equivalent and include coverage for, but not limited to, the following:
    - Bodily Injury and Property Damage
    - Personal Injury and Advertising Injury
    - Fire legal liability
    - Products and completed operations

This policy shall also contain the following endorsements, which shall be indicated on the certificate of insurance:

- The definition of insured contract shall be amended to remove any exclusion or other limitation for any work being done within 50 feet of railroad property.
- Waiver of subrogation in favor of and acceptable to Railroad.
- Additional insured endorsement in favor of and acceptable to Railroad.
- Separation of insureds.
- The policy shall be primary and non-contributing with respect to any insurance carried by Railroad.

It is agreed that the workers' compensation and employers' liability related exclusions in the Commercial General Liability insurance policy(s) required herein are intended to apply to employees of the policy holder and shall not apply to Railroad employees.

No other endorsements limiting coverage as respects obligations under this Agreement may be included on the policy with regard to the work being performed under this Agreement.

B. Business Automobile Insurance. This insurance shall contain a combined single limit of at least $1,000,000 per occurrence, and include coverage for, but not limited to the following:

- Bodily injury and property damage
- Any and all vehicles owned, used or hired

This policy shall also contain the following endorsements or language, which shall be indicated on the certificate of insurance:

- Waiver of subrogation in favor of and acceptable to Railroad.
- Additional insured endorsement in favor or and acceptable to Railroad.
- Separation of insureds.
- The policy shall be primary and non-contributing with respect to any insurance carried by Railroad.

C. Workers Compensation and Employers Liability Insurance. This insurance shall include coverage for, but not limited to:

- Contractor's statutory liability under the worker's compensation laws of the state(s) in which the work is to be performed. If optional under State law, the insurance must cover all employees anyway.
- Employers' Liability (Part B) with limits of at least $500,000 each accident, $500,000 by disease policy limit, $500,000 by disease each employee.

This policy shall also contain the following endorsements or language, which shall be indicated on the certificate of insurance:

- Waiver of subrogation in favor of and acceptable to Railroad.

D. Railroad Protective Liability Insurance. This insurance shall name only the Railroad as the Insured with coverage of at least $5,000,000 per occurrence and $10,000,000 in the aggregate. The policy shall be issued on a standard ISO form CG 00 35 10 93 and include the following:

- Endorsed to include the Pollution Exclusion Amendment (ISO form CG 28 31 10 93)
- Endorsed to include the Limited Seepage and Pollution Endorsement.

- Endorsed to remove any exclusion for punitive damages.
- No other endorsements restricting coverage may be added.
- The original policy must be provided to Railroad prior to performing any work or services under this Agreement

In lieu of providing a Railroad Protective Liability Policy, Contractor may participate in BNSF's Blanket Railroad Protective Liability Insurance Policy available to Contractor.

Other Requirements:

All policies (applying to coverage listed above) must not contain an exclusion for punitive damages and certificates of insurance must reflect that no exclusion exists.

Contractor agrees to waive its right of recovery against Railroad for all claims and suits against Railroad, except for claims and suits arising wholly out of the sole negligence, or to the extent caused by the gross negligence or willful misconduct, of Railroad. In addition, its insurers, through the terms of the policy or policy endorsement, waive their right of subrogation against Railroad for all claims and suits, except for claims and suits arising wholly out of the sole negligence, or to the extent caused by the gross negligence of willful misconduct, of Railroad. The certificate of insurance must reflect the waiver of subrogation endorsement. Contractor further waives its right of recovery, and its insurers also waive their right of subrogation against Railroad for loss of its owned or leased property or property under Contractor's care, custody or control, except for the right of recovery or right of subrogation arising wholly out of the sole negligence, or to the extent caused by the gross negligence or willful misconduct, of Railroad.

Contractor is not allowed to self-insure without the prior written consent of Railroad. If granted by Railroad, any deductible, self-insured retention or other financial responsibility for claims must be covered directly by Contractor in lieu of insurance. Any and all Railroad liabilities that would otherwise, in accordance with the provisions of this Agreement, be covered by Contractor's insurance will be covered as if Contractor elected not to include a deductible, self-insured retention or other financial responsibility for claims.

Prior to commencing the C&M Work, Contractor must furnish to Railroad acceptable certificate(s) of insurance including an original signature of the authorized representative evidencing the required coverage, endorsements, and amendments. The policy(ies) must contain a provision that obligates the insurance company(ies) issuing such policy(ies) to notify Railroad in writing at least 30 days prior to any cancellation, non-renewal, substitution or material alteration. This cancellation provision must be indicated on the certificate of insurance. Upon request from Railroad, a certified duplicate original of any required policy must be furnished. Certificate(s) should be sent to the following address:

Ebix BPO
PO Box 12010-BN
Hemet, CA 92546-8010
Fax number: 951-652-2882
Email: bnsf@ebix.com

Any insurance policy must be written by a reputable insurance company reasonably acceptable to Railroad or with a current Best's Guide Rating of A- and Class VII or better, and authorized to do business in the state(s) in which the service is to be provided.

Contractor represents that this Agreement has been thoroughly reviewed by Contractor's insurance agent(s)/broker(s), who have been instructed by Contractor to procure the insurance coverage required by this Agreement. Allocated Loss Expense must be in addition to all policy limits for coverages referenced above.

Not more frequently than once every five years, Railroad may reasonably modify the required insurance coverage to reflect then-current risk management practices in the railroad industry and underwriting practices in the insurance industry.

If any portion of the operation is to be subcontracted by Contractor, Contractor must require that its subcontractors provide and maintain the insurance coverages set forth herein, naming Railroad as an additional insured, and requiring that the subcontractors release, defend and indemnify Railroad to the same extent and under the same terms and conditions as Contractor is required to release, defend and indemnify Railroad herein.

Failure to provide evidence as required by this section will entitle, but not require, Railroad to immediately suspend work under this Agreement until such evidence is provided. Acceptance of a certificate that does not comply with this section will not operate as a waiver of Contractor's obligations hereunder.

The fact that insurance (including, without limitation, self-insurance) is obtained by Contractor will not be deemed to release or diminish the liability of Contractor including, without limitation, liability under the indemnity provisions of this Agreement. Damages recoverable by Railroad will not be limited by the amount of the required insurance coverage.

For purposes of this section, Railroad means "Burlington Northern Santa Fe, LLC", "BNSF Railway Company" and the subsidiaries, successors, assigns and affiliates of each.

Section 4. EXHIBIT C CONTRACTOR REQUIREMENTS

The Contractor must observe and comply with all provisions, obligations, requirements and limitations contained in the Contract, and the Contractor Requirements set forth on Exhibit C attached to this Agreement and the Contract, including, but not be limited to, payment of all costs incurred for any damages to Railway roadbed, tracks, and/or appurtenances thereto, resulting from use, occupancy, or presence of its employees, representatives, or agents or subcontractors on or about the construction site.

Section 5. TRAIN DELAY

Contractor is responsible for and hereby indemnifies and holds harmless Railway (including its affiliated railway companies, and its tenants) for, from and against all damages arising from any unscheduled delay to a freight or passenger train which affects Railway's ability to fully utilize its equipment and to meet customer service and contract obligations. Contractor will be billed, as further provided below, for the economic losses arising from loss of use of equipment, contractual loss of incentive pay and bonuses and contractual penalties resulting from train delays, whether caused by Contractor, or subcontractors, or by the Railway performing work under this Agreement. Railway agrees that it will not perform any act to unnecessarily cause train delay.

For loss of use of equipment, Contractor will be billed the current freight train hour rate per train as determined from Railway's records. Any disruption to train traffic may cause delays to multiple trains at the same time for the same period.

Additionally, the parties acknowledge that passenger, U.S. mail trains and certain other grain, intermodal, coal and freight trains operate under incentive/penalty contracts between Railway and its customer(s). Under these arrangements, if Railway does not meet its contract service commitments, Railway may suffer loss of performance or incentive pay and/or be subject to penalty payments. Contractor is responsible for any train performance and incentive penalties or other contractual economic losses actually incurred by Railway which are attributable to a train delay caused by Contractor or its subcontractors.

The contractual relationship between Railway and its customers is proprietary and confidential. In the event of a train delay covered by this Agreement, Railway will share information relevant to any train delay to the extent consistent with Railway confidentiality obligations. Damages for train delay are currently $382.20 per hour per incident. **THE RATE THEN IN EFFECT AT THE TIME OF PERFORMANCE BY THE CONTRACTOR HEREUNDER WILL BE USED TO CALCULATE THE ACTUAL COSTS OF TRAIN DELAY PURSUANT TO THIS AGREEMENT.**

Contractor and its subcontractors must give Railway's Project Engineer (402) 458-7537 thirty (30) days' minimum advance notice of the times and dates for proposed work windows. Railway and Contractor will establish mutually agreeable work windows for the project. Railway has the right at any time to revise or change the work windows due to train operations or service obligations. Railway will not be responsible for any additional costs or expenses resulting from a change in work windows. Additional costs or expenses resulting from a change in work windows shall be accounted for in Contractor's expenses for the project.

Contractor and subcontractors must plan, schedule, coordinate and conduct all Contractor's work so as to not cause any delays to any trains.

[Signature page follows]

Kindly acknowledge receipt of this letter by signing and returning to the Railway two original copies of this letter, which, upon execution by Railway, will constitute an Agreement between us.

_____	
(Contractor)	**BNSF Railway Company**
By:_____	By:_____
Printed Name: _____	Name:_____
Title:_____	*Project Engineer*
Contact Person: _____	Accepted and effective this _____day of 20__.
Address: _____	
_____	
City:_____ State:___ Zip:____	
Fax: _____	
Phone: _____	
E-mail:_____	

EXHIBIT C-1(B)

CONTRACTOR'S RIGHT OF ENTRY
For C&M Work

BNSF RAILWAY COMPANY
Attention: Project Engineer

Gentlemen:

The undersigned (hereinafter, the "**Contractor**"), has entered into a contract (the "**Contract**") dated _____, 20_ with the City of Lincoln, Nebraska ("**City**") for the performance of certain work ("**C&M Work**") in connection with the construction of entertainment, recreation, lodging, offices, retail and/or other complementary and/or supporting facilities in Lincoln, Nebraska (collectively, the "**West Haymarket Project**"). The work to be performed under this Agreement is deemed to be "City C&M Work" (as defined in that certain Construction and Maintenance Agreement ["**C&M Agreement**"] dated _____, 2010, between BNSF Railway Company and the City). Performance of such C&M Work will necessarily require Contractor to enter BNSF RAILWAY COMPANY ("**Railway**") right of way and property ("**Railway Property**"). The Contract provides that no C&M Work will be commenced within Railway Property until the Contractor employed in connection with said C&M Work for the **City of Lincoln, Nebraska** (i) executes and delivers to Railway an Agreement in the form hereof, and (ii) provides insurance of the coverage and limits specified in such Agreement and Section 3 herein. If this Agreement is executed by a party who is not the Owner, General Partner, President or Vice President of Contractor, Contractor must furnish evidence to Railway certifying that the signatory is empowered to execute this Agreement on behalf of Contractor.

Accordingly, in consideration of Railway granting permission to Contractor to enter upon Railway Property and as an inducement for such entry, Contractor, effective on the date of the Contract, has agreed and does hereby agree with Railway as follows:

Section 1. RELEASE OF LIABILITY AND INDEMNITY

TO THE FULLEST EXTENT PERMITTED BY LAW, CONTRACTOR SHALL RELEASE, INDEMNIFY, DEFEND AND HOLD HARMLESS RAILWAY AND RAILWAY'S AFFILIATED COMPANIES, PARTNERS, SUCCESSORS, ASSIGNS, LEGAL REPRESENTATIVES, OFFICERS, DIRECTORS, SHAREHOLDERS, EMPLOYEES AND AGENTS FOR, FROM AND AGAINST ANY AND ALL CLAIMS, LIABILITIES, FINES, PENALTIES, COSTS, DAMAGES, LOSSES, LIENS, CAUSES OF ACTION, SUITS, DEMANDS, JUDGMENTS AND EXPENSES (INCLUDING, WITHOUT LIMITATION, COURT COSTS AND ATTORNEYS' FEES) OF ANY NATURE, KIND OR DESCRIPTION OF ANY PERSON (INCLUDING, WITHOUT LIMITATION, THE EMPLOYEES OF THE PARTIES HERETO) OR ENTITY DIRECTLY OR INDIRECTLY (COLLECTIVELY, "LIABILITIES") ARISING OUT OF, RESULTING FROM OR CAUSALLY RELATED TO (IN WHOLE OR IN PART):

(i) ANY RIGHTS OR INTERESTS GRANTED TO CONTRACTOR PURSUANT TO THIS AGREEMENT;

(ii) THE USE, OCCUPANCY OR PRESENCE OF CONTRACTOR AND CONTRACTOR PARTIES (DEFINED BELOW) AND/OR ANY WORK PERFORMED BY CONTRACTOR AND CONTRACTOR PARTIES IN, ON, OR ABOUT RAILWAY'S PROPERTY OR RIGHT-OF-WAY AND/OR THE WEST HAYMARKET PROJECT, INCLUDING, WITHOUT LIMITATION, OPERATION OF THE PEDESTRIAN BRIDGE, SECURITY FENCING, OR STORM WATER MITIGATION BY ANY CONTRACTOR PARTY (DEFINED BELOW);

(iii) ANY ENVIRONMENTAL MATTERS ARISING FROM CONTRACTOR AND/OR CONTRACTOR PARTIES' USE AND OCCUPANCY OF RAILWAY'S RIGHT-OF-WAY OR OTHER RAILWAY PROPERTY, INCLUDING WITHOUT LIMITATION USE AND OCCUPANCY OF RAILWAY'S RIGHT-OF-WAY OR OTHER RAILWAY PROPERTY IN CONNECTION WITH PERFORMANCE OF THE C&M WORK;

(iv) ANY DAMAGE TO OR DESTRUCTION OF ANY TELECOMMUNICATION LINES IN CONNECTION WITH THE WEST HAYMARKET PROJECT BY CONTRACTOR AND/OR CONTRACTOR PARTIES, INCLUDING BUT NOT LIMITED TO (A) ANY INJURY TO OR DEATH OF ANY PERSON EMPLOYED BY OR ON BEHALF OF ANY TELECOMMUNICATIONS COMPANY, AND/OR ITS CONTRACTORS, AGENTS AND/OR EMPLOYEES AS A RESULT OF SUCH DAMAGE OR DESTRUCTION, AND/OR (B) ANY CLAIM OR CAUSE OF ACTION FOR ALLEGED LOSS OF PROFITS OR REVENUE BY, OR LOSS OF SERVICE BY A CUSTOMER OR USER OF SUCH TELECOMMUNICATION COMPANY(IES) AS A RESULT OF SUCH DAMAGE OR DESTRUCTION;

(v) CONTRACTOR'S BREACH OF THE TERMS AND CONDITIONS OF THIS AGREEMENT; OR

(vi) ANY ACT OR OMISSION OF CONTRACTOR OR ITS OFFICERS, AGENTS, INVITEES, EMPLOYEES OR SUBCONTRACTORS (SUCH OFFICERS, AGENTS, INVITEES, EMPLOYEES AND SUBCONTRACTORS BEING REFERRED TO HEREIN INDIVIDUALLY AS A "CONTRACTOR PARTY" AND COLLECTIVELY, "CONTRACTOR PARTIES"), OR ANYONE DIRECTLY OR INDIRECTLY EMPLOYED BY ANY OF THEM, OR ANYONE THEY CONTROL OR EXERCISE CONTROL OVER.

THE LIABILITY ASSUMED BY CONTRACTOR WILL NOT BE AFFECTED BY THE FACT, IF IT IS A FACT, THAT ANY DAMAGE, DESTRUCTION, INJURY OR DEATH WAS OCCASIONED BY OR CONTRIBUTED TO BY THE NEGLIGENCE OF RAILWAY, ITS AGENTS, SERVANTS, EMPLOYEES OR OTHERWISE, BUT EXCLUDING CLAIMS WHOLLY CAUSED BY RAILWAY'S SOLE NEGLIGENCE AND EXCLUDING CLAIMS TO THE EXTENT THAT SUCH CLAIMS ARE CAUSED BY THE WILLFUL MISCONDUCT OR GROSS NEGLIGENCE OF RAILWAY.

FURTHER, TO THE FULLEST EXTENT PERMITTED BY LAW, CONTRACTOR AGREES, REGARDLESS OF ANY NEGLIGENCE OR ALLEGED NEGLIGENCE OF RAILWAY, TO INDEMNIFY, DEFEND AND HOLD HARMLESS RAILWAY AGAINST AND ASSUME THE DEFENSE OF ANY LIABILITIES ASSERTED AGAINST OR SUFFERED BY RAILWAY UNDER OR RELATED TO THE FEDERAL EMPLOYERS' LIABILITY ACT ("FELA") WHENEVER EMPLOYEES OF CONTRACTOR OR ANY CONTRACTOR PARTY CLAIM OR ALLEGE THAT THEY ARE EMPLOYEES OF RAILWAY OR OTHERWISE. THIS INDEMNITY SHALL ALSO EXTEND, ON THE SAME BASIS, TO FELA CLAIMS BASED ON ACTUAL OR ALLEGED VIOLATIONS OF ANY FEDERAL, STATE OR LOCAL LAWS OR REGULATIONS, INCLUDING BUT NOT LIMITED TO THE SAFETY APPLIANCE ACT, THE LOCOMOTIVE INSPECTION ACT, THE OCCUPATIONAL SAFETY AND HEALTH ACT, THE RESOURCE

CONSERVATION AND RECOVERY ACT, AND ANY SIMILAR STATE OR FEDERAL STATUTE.

Contractor further agrees, at its expense, in the name and on behalf of Railway, that it will adjust and settle all Liabilities against Railway, and will, at Railway's discretion, appear and defend any suits or actions of law or in equity brought against Railway on any claim or cause of action arising out of any liability assumed by Contractor under this Agreement for which Railway is liable or is alleged to be liable. Railway will give notice to Contractor, in writing, of the receipt or dependency of such claims and thereupon Contractor must proceed to adjust and handle to a conclusion such claims, and in the event of a suit being brought against Railway, Railway may forward summons and complaint or other process in connection therewith to Contractor, and Contractor, at Railway's discretion, must defend, adjust, or settle such suits and protect, indemnify, and save harmless Railway from and against all Liabilities arising out of any such claims or suits, provided that the foregoing indemnification obligations do not include Liabilities arising wholly out of the sole negligence of Railway or to the extent caused by the gross negligence or willful misconduct of Railway.

In addition to any other provision of this Agreement, in the event that all or any portion of this Article shall be deemed to be inapplicable for any reason, including without limitation as a result of a decision of an applicable court, legislative enactment or regulatory order, the parties agree that this Article shall be interpreted as requiring Contractor to indemnify Railway to the fullest extent permitted by applicable law. **THROUGH THIS AGREEMENT THE PARTIES EXPRESSLY INTEND FOR CONTRACTOR TO INDEMNIFY RAILWAY FOR RAILWAY'S ACTS OF NEGLIGENCE, BUT EXCLUDING CLAIMS WHOLLY CAUSED BY RAILWAY'S SOLE NEGLIGENCE AND EXCLUDING CLAIMS TO THE EXTENT THAT SUCH CLAIMS ARE CAUSED BY THE WILLFUL MISCONDUCT OR GROSS NEGLIGENCE OF RAILWAY.**

It is mutually understood and agreed that the assumption of liabilities and indemnification provided for in this Agreement survive any termination of this Agreement.

Section 2. TERM

This Agreement is effective from the date of the Contract until (i) the completion of the project set forth herein, and (ii) full and complete payment to Railway of any and all sums or other amounts owing and due hereunder.

Section 3. INSURANCE

Contractor must, at its sole cost and expense, procure and maintain during the life of this Agreement the following insurance coverage:

A. Commercial General Liability Insurance. This insurance shall contain broad form contractual liability with a combined single limit of a minimum of $2,000,000.00 per occurrence, and $4,000,000.00 in the aggregate, but in no event less than the amount otherwise carried by the Contractor. Coverage must be purchased on a post 1998 ISO occurrence form or equivalent and include coverage for, but not limited to, the following:
    - Bodily Injury and Property Damage
    - Personal Injury and Advertising Injury
    - Fire legal liability
    - Products and completed operations

This policy shall also contain the following endorsements, which shall be indicated on the certificate of insurance:

- The definition of insured contract shall be amended to remove any exclusion or other limitation for any work being done within 50 feet of railroad property.
- Waiver of subrogation in favor of and acceptable to Railroad.
- Additional insured endorsement in favor of and acceptable to Railroad.
- Separation of insureds.
- The policy shall be primary and non-contributing with respect to any insurance carried by Railroad.

It is agreed that the workers' compensation and employers' liability related exclusions in the Commercial General Liability insurance policy(s) required herein are intended to apply to employees of the policy holder and shall not apply to Railroad employees.

No other endorsements limiting coverage as respects obligations under this Agreement may be included on the policy with regard to the work being performed under this Agreement.

B. Business Automobile Insurance. This insurance shall contain a combined single limit of at least $1,000,000 per occurrence, and include coverage for, but not limited to the following:

- Bodily injury and property damage
- Any and all vehicles owned, used or hired

This policy shall also contain the following endorsements or language, which shall be indicated on the certificate of insurance:

- Waiver of subrogation in favor of and acceptable to Railroad.
- Additional insured endorsement in favor or and acceptable to Railroad.
- Separation of insureds.
- The policy shall be primary and non-contributing with respect to any insurance carried by Railroad.

C. Workers Compensation and Employers Liability Insurance. This insurance shall include coverage for, but not limited to:

- Contractor's statutory liability under the worker's compensation laws of the state(s) in which the work is to be performed. If optional under State law, the insurance must cover all employees anyway.
- Employers' Liability (Part B) with limits of at least $500,000 each accident, $500,000 by disease policy limit, $500,000 by disease each employee.

This policy shall also contain the following endorsements or language, which shall be indicated on the certificate of insurance:

- Waiver of subrogation in favor of and acceptable to Railroad.

D. Railroad Protective Liability Insurance. This insurance shall name only the Railroad as the Insured with coverage of at least $5,000,000 per occurrence and $10,000,000 in the aggregate. The policy shall be issued on a standard ISO form CG 00 35 10 93 and include the following:

- *Endorsed to include the Pollution Exclusion Amendment (ISO form CG 28 31 10 93)*
- Endorsed to include the Limited Seepage and Pollution Endorsement.

- Endorsed to remove any exclusion for punitive damages.
- No other endorsements restricting coverage may be added.
- The original policy must be provided to Railroad prior to performing any work or services under this Agreement

In lieu of providing a Railroad Protective Liability Policy, Contractor may participate in BNSF's Blanket Railroad Protective Liability Insurance Policy available to Contractor.

Other Requirements:

All policies (applying to coverage listed above) must not contain an exclusion for punitive damages and certificates of insurance must reflect that no exclusion exists.

Contractor agrees to waive its right of recovery against Railroad for all claims and suits against Railroad, except for claims and suits arising wholly out of the sole negligence, or to the extent caused by the gross negligence or willful misconduct, of Railroad. In addition, its insurers, through the terms of the policy or policy endorsement, waive their right of subrogation against Railroad for all claims and suits, except for claims and suits arising wholly out of the sole negligence, or to the extent caused by the gross negligence of willful misconduct, of Railroad. The certificate of insurance must reflect the waiver of subrogation endorsement. Contractor further waives its right of recovery, and its insurers also waive their right of subrogation against Railroad for loss of its owned or leased property or property under Contractor's care, custody or control, except for the right of recovery or right of subrogation arising wholly out of the sole negligence, or to the extent caused by the gross negligence or willful misconduct, of Railroad.

Contractor is not allowed to self-insure without the prior written consent of Railroad. If granted by Railroad, any deductible, self-insured retention or other financial responsibility for claims must be covered directly by Contractor in lieu of insurance. Any and all Railroad liabilities that would otherwise, in accordance with the provisions of this Agreement, be covered by Contractor's insurance will be covered as if Contractor elected not to include a deductible, self-insured retention or other financial responsibility for claims.

Prior to commencing the C&M Work, Contractor must furnish to Railroad acceptable certificate(s) of insurance including an original signature of the authorized representative evidencing the required coverage, endorsements, and amendments. The policy(ies) must contain a provision that obligates the insurance company(ies) issuing such policy(ies) to notify Railroad in writing at least 30 days prior to any cancellation, non-renewal, substitution or material alteration. This cancellation provision must be indicated on the certificate of insurance. Upon request from Railroad, a certified duplicate original of any required policy must be furnished. Certificate(s) should be sent to the following address:

Ebix BPO
PO Box 12010-BN
Hemet, CA 92546-8010
Fax number: 951-652-2882
Email: bnsf@ebix.com

Any insurance policy must be written by a reputable insurance company reasonably acceptable to Railroad or with a current Best's Guide Rating of A- and Class VII or better, and authorized to do business in the state(s) in which the service is to be provided.

Contractor represents that this Agreement has been thoroughly reviewed by Contractor's insurance agent(s)/broker(s), who have been instructed by Contractor to procure the insurance coverage required by this Agreement. Allocated Loss Expense must be in addition to all policy limits for coverages referenced above.

Not more frequently than once every five years, Railroad may reasonably modify the required insurance coverage to reflect then-current risk management practices in the railroad industry and underwriting practices in the insurance industry.

If any portion of the operation is to be subcontracted by Contractor, Contractor must require that its subcontractors provide and maintain the insurance coverages set forth herein, naming Railroad as an additional insured, and requiring that the subcontractors release, defend and indemnify Railroad to the same extent and under the same terms and conditions as Contractor is required to release, defend and indemnify Railroad herein.

Failure to provide evidence as required by this section will entitle, but not require, Railroad to immediately suspend work under this Agreement until such evidence is provided. Acceptance of a certificate that does not comply with this section will not operate as a waiver of Contractor's obligations hereunder.

The fact that insurance (including, without limitation, self-insurance) is obtained by Contractor will not be deemed to release or diminish the liability of Contractor including, without limitation, liability under the indemnity provisions of this Agreement. Damages recoverable by Railroad will not be limited by the amount of the required insurance coverage.

For purposes of this section, Railroad means "Burlington Northern Santa Fe, LLC", "BNSF Railway Company" and the subsidiaries, successors, assigns and affiliates of each.

Section 4. EXHIBIT C CONTRACTOR REQUIREMENTS

The Contractor must observe and comply with all provisions, obligations, requirements and limitations contained in the Contract, and the Contractor Requirements set forth on Exhibit C attached to this Agreement and the Contract, including, but not be limited to, payment of all costs incurred for any damages to Railway roadbed, tracks, and/or appurtenances thereto, resulting from use, occupancy, or presence of its employees, representatives, or agents or subcontractors on or about the construction site.

Section 5. TRAIN DELAY

Contractor is responsible for and hereby indemnifies and holds harmless Railway (including its affiliated railway companies, and its tenants) for, from and against all damages arising from any unscheduled delay to a freight or passenger train which affects Railway's ability to fully utilize its equipment and to meet customer service and contract obligations. Contractor will be billed, as further provided below, for the economic losses arising from loss of use of equipment, contractual loss of incentive pay and bonuses and contractual penalties resulting from train delays, whether caused by Contractor, or subcontractors, or by the Railway performing work under this Agreement. Railway agrees that it will not perform any act to unnecessarily cause train delay.

For loss of use of equipment, Contractor will be billed the current freight train hour rate per train as determined from Railway's records. Any disruption to train traffic may cause delays to multiple trains at the same time for the same period.

Additionally, the parties acknowledge that passenger, U.S. mail trains and certain other grain, intermodal, coal and freight trains operate under incentive/penalty contracts between Railway and its customer(s). Under these arrangements, if Railway does not meet its contract service commitments, Railway may suffer loss of performance or incentive pay and/or be subject to penalty payments. Contractor is responsible for any train performance and incentive penalties or other contractual economic losses actually incurred by Railway which are attributable to a train delay caused by Contractor or its subcontractors.

The contractual relationship between Railway and its customers is proprietary and confidential. In the event of a train delay covered by this Agreement, Railway will share information relevant to any train delay to the extent consistent with Railway confidentiality obligations. Damages for train delay are currently $382.20 per hour per incident. **THE RATE THEN IN EFFECT AT THE TIME OF PERFORMANCE BY THE CONTRACTOR HEREUNDER WILL BE USED TO CALCULATE THE ACTUAL COSTS OF TRAIN DELAY PURSUANT TO THIS AGREEMENT.**

Contractor and its subcontractors must give Railway's Project Engineer (402) 458-7537 thirty (30) days' minimum advance notice of the times and dates for proposed work windows. Railway and Contractor will establish mutually agreeable work windows for the project. Railway has the right at any time to revise or change the work windows due to train operations or service obligations. Railway will not be responsible for any additional costs or expenses resulting from a change in work windows. Additional costs or expenses resulting from a change in work windows shall be accounted for in Contractor's expenses for the project.

Contractor and subcontractors must plan, schedule, coordinate and conduct all Contractor's work so as to not cause any delays to any trains.

[Signature page follows]

Kindly acknowledge receipt of this letter by signing and returning to the Railway two original copies of this letter, which, upon execution by Railway, will constitute an Agreement between us.

_____	
(Contractor)	**BNSF Railway Company**
By:_____	By:_____
Printed Name: _____	Name:_____
Title:_____	*Project Engineer*
Contact Person: _____	Accepted and effective this _____day of 20__.
Address: _____	
_____	
City:_____ State:___ Zip:____	
Fax: _____	
Phone: _____	
E-mail:_____	

EXHIBIT D

Final Clearances

Pursuant to the provisions of **Section 3.1.3** of the C&M Agreement, approved Final Clearances for each segment of City C&M Work being constructed pursuant to the City Work Final Design are attached hereto as **Exhibit D**.

EXHIBIT E

Soil Management Plan

In addition to and not in limitation of the requirements and obligations of City and City Contractors contained in the C&M Agreement, the following requirements shall apply to City and City Contractors with respect to management of impacted environmental media. In the event of conflicts between the terms of this **Exhibit E** and the rest of the C&M Agreement, including but not limited to the provisions of **Exhibit C** and, as applicable, **Exhibit C-1(A)** or **Exhibit C-1(B)**, the most restrictive provisions shall apply to City and City Contractors.

Proper Management of Impacted Media

1. Access

Access to the West Haymarket Redevelopment Site (WHRS) is restricted to railroad and City of Lincoln personnel and contractors conducting work in their official capacity as employees or contractors of their respective organizations. Access to Railroad operating property for purposes of providing construction – related services is subject to specific safety and rules training certifications and requirements found at: **www.contractororientation.com**. Access to other non-railroad private property for purposes of performing construction – related services within the WHRS must be arranged through the EPMT.

2. Management Practices

Due to the potential risks and penalties involved in management of impacted media and protection of rare and unique saline wetlands as well as the wide applicability of these issues to planned construction activity, prescriptive management practices for these areas are as follows:

2.1 Impacted Soil and Debris Management

Attachment 3 - NDEQ Environmental Guidance Document 05-061 "Investigation Derived Waste and Remediation Considerations" (GD 05-061) is provided as reference. Relevant and critical points extracted from GD 05-061 as well as NDEQ's Title 132 (Integrated Solid Waste Management Regulations) for purposes of implementation and compliance is as follows:

1. A fundamental premise regarding the regulatory status of any soils, debris or other media encountered during intrusive activities is that such items are not considered waste material until determined by the Project Manager in consultation with the Technical Representative to be no longer suitable for its intended purpose.

2. Title 132, Chapter 1, Section 041 defines fill as: "*solid waste that consists only of one or more of the following: sand, gravel, stone, soil, rock, brick, concrete rubble, asphalt rubble, or similar material*".

3. The "*use of fill for legitimate land improvement (backfilling a foundation) is allowed per Title 132, Chapter 2, Section 002.01 as long as the fill is not mixed with other solid wastes that have the potential to cause contamination that may threaten human health or the environment*".

4. From pg. 2 of NDEQ GD 05-161: "*Activity not related to investigation or remediation is not considered "active management" under the waste regulations. For example, routine trench or foundation excavation spoils that are generated at a site that is not a remediation or investigation activity site or are not related to remediation or investigation activities are not considered a waste unless it is intended for disposal. Such spoils could normally be replaced in the excavation.*"

5. Prior to initiation of each construction task, the project manager will consult with the technical representative to determine the type of material anticipated to be excavated, potential

contaminants of concern (if any) and allowable re-use (including use as fill), alternatives to be employed for excess soil or debris to be generated associated with his/her respective work task. The project manager will work with the construction representative and advise where excess soils or debris shall be stored. Provisions for temporary storage of potentially impacted soil/debris must be explicitly agreed upon.

2.2 Grading/Excavation

Construction grading and excavation activities associated with applicable WHRS project activities require coordination and compliance as follows:

1. Grading/excavation project manager/contractor's representative (PM/CR) must contact the Technical Representative (TR) at least 14 days prior to initiation of grading/excavation work to discuss anticipated conditions and any special precautions to consider.

2. The PM/CR must arrange for all utility clearance.

3. The PM/CR must meet with the TR to discuss task – specific precautions (as detailed in any and all applicable work activities described in this Section).

4. A TR must be on-site or on call to respond to questions or observations that could require sampling or determinations relevant to management of impacted soil or debris. ***It is the responsibility of the PM/CR to notify the TR of construction schedules and activities (including any changes in schedules or scope of work effort) that may require on-site support and observation***.

5. Unless superseded by other special considerations, grading/excavation activities may proceed per the contractual project/task plans and specifications.

6. Changing field considerations and observations (including encountering suspect soils/debris/other media or modifications of proposed areas/volumes of soil grading/excavation/filling) must be reported to the TR.

7. If during execution of contractual plans and specifications the PM/CR determines the need to manage excess soils/debris/other media) not previously addressed, the PM/CR will consult with the TR to discuss management of affected media. Resolution and ultimate fate of the affected media will be documented by the TR.

8. Work shutdown will be at the discretion of the PM/CR's corporate health and safety policies and practices.

2.3 Utility Work

Contractors performing utility work including all intrusive work (trenching, boring, digging, etc.) where surface features (soil, concrete, asphalt, vegetated surfaces) will be disturbed require conformance to the following procedures:

1. The utility project manager/contractor's representative (PM/CR) must contact the TR at least 14 days prior to initiation of intrusive utility work to discuss anticipated conditions and any special precautions to consider.

2. The PM/CR must arrange for all related utility clearance.

3. The PM/CR must meet with the TR to discuss task – specific precautions (as detailed in any and all applicable work activities described in this Section).

4. A TR must be on-site or on call to respond to questions or observations that could require sampling or determinations relevant to management of impacted soil or debris. ***It is the***

responsibility of the PM/CR to notify the TR of construction schedules and activities (including any changes in schedules or scope of work effort) that may require on-site support and observation.

5. Unless superseded by other special considerations, utility construction activities may proceed per the contractual project/task plans and specifications.

6. Changing field considerations and observations (including encountering suspect soils/debris/other media or modifications of proposed routes of utility corridors) must be immediately reported to the TR.

7. In general, soil/debris/spoils which will not be removed from the site can be used as backfill around utilities if determined by the PM/CR to be suitable fill material and the material has no appearance of contamination or odor. Soil/debris/spoils removed during the course of intrusive utility work with an appearance of contamination or odor will be immediately notified to the TR for consultation and resolution including temporary storage of the suspect material.

8. If during execution of contractual plans and specifications the PM/CR determines there is a need to manage excess soils/debris/other media) not previously addressed, the PM/CR will consult with the TR to discuss management of affected media. Resolution and ultimate fate of the affected media will be documented by the TR.

9. Work shutdown will be at the discretion of the PM/CR's corporate health and safety policies and practices.

SPILL/INCIDENT RESPONSE REFERRAL SHEET

SPILL REPORTING

First Call:

Environmental Project Management Team Technical Representatives:

Frank Uhlarik – Alfred Benesch & Company:	**402-333-5792**
	Cell: 402-669-0546
Alternate:	
Bill Imig – Olsson Associates:	**402-458-5903**
	Cell: 402-314-4568
Alternate:	
Miki Esposito – Environmental Project Management Team:	**402-441-6173**

Agencies/Railroad Authorities:

Nebraska Department of Environmental Quality:	**402-471-2186 or 877-253-2603**

After Hours, Weekends and Holidays:

Nebraska State Patrol Dispatch:	**402-471-4545**
BNSF Railway Company Resource Operations Center:	**800-832-5452**
Union Pacific Railroad Security:	**888-877-7267**
National Response Center:	**800-424-8802**

ALL OTHER INCIDENTS

Fire and Police: **Dial 911**

LIST OF ACRONYMS

CR	Contractor's Representative
SMP	Soil Management Plan
EPMT	City of Lincoln Environmental Project Management Team
PM	Project Manager
TR	Environmental Project Management Team Technical Representative
WHRS	West Haymarket Redevelopment Site

EXHIBIT D

Other Contract Documents

COMMENTARY TO ACCOMPANY CONSTRUCTION BONDS

A. GENERAL INFORMATION
There are two types of construction bonds that are required by statutes for public work in many jurisdictions and are widely used for other projects as well.

Construction Performance Bond
Construction Payment Bond

The Construction Performance Bond is an instrument that is used to assure the availability of funds to complete the construction.

The Construction Payment Bond is an instrument that is used to assure the availability of sufficient funds to pay for labor, materials and equipment used in the construction. For public work the Construction Payment Bond provides rights of recovery for workers and suppliers similar to their rights under the mechanics lien laws applying to private work.

The objective underlying the re-writing of construction bond forms was to make them more understandable to provide guidance to users. The intention was to define the rights and responsibilities of the parties, without changing the traditional rights and responsibilities that have been decided by the courts. The new bond forms provide helpful guidance regarding time periods for various notices and actions and clarify the extent of available remedies.

The concept of pre-default meeting has been incorporated into the Construction Performance Bond. All of the participants favored early and informal resolution of the problems that may precipitate a default, but some Surety companies were reluctant to participate in pre-default settings absent specific authorization in the bond form.

The responsibilities of the Owner and the options available to the Surety when a default occurs are set forth in the Construction Performance Bond. Procedures for making a claim under the Construction Payment Bond are set forth in the form.

EJCDC recommends the use of two separate bonds rather than a combined form. Normally the amount of each bond is 100 percent of the contract amount. The bonds have different purposes and are separate and distinct obligations of the Surety. The Surety Association reports that the usual practice is to charge a single premium for both bonds and there is no reduction in premium for using a combined form or for issuing one bond without the other.

B. COMPLETING THE FORMS
Bonds have important legal consequences; consultation with an attorney and a bond specialist is encouraged with respect to federal, state and local laws applicable to bonds and with respect to completing or modifying the bond forms.

Both bond forms have a similar format and the information to be filled in is ordinarily the same on both bonds. If modification is necessary, the modifications may be different.

The bond forms are prepared for execution by the Contractor and the Surety. Evidence of authority to bind the Surety is usually provided in the form of a power of attorney designating the agent who is authorized to sign on behalf of the Surety. The power of attorney should be filed with the signed bonds.

Each bond must be executed separately since they cover separate and distinct obligations.

Preferably the bond date should be the same date as the contract, but in no case should the bond date precede the date of the contract.

CONSTRUCTION PERFORMANCE BOND

Any singular reference to Contractor, Surety, Owner or other party shall be considered plural where applicable.

CONTRACTOR (Name and Address):

SURETY (Name and Principal Place of Business):

Owner (Name and Address):
West Haymarket Joint Public Agency
555 South 10th St.
Lincoln, NE 68508

CONSTRUCTION CONTRACT
Date:
Amount:

Description (Name and Location):
For all labor, material and equipment necessary for (Bid Name and Number)

BOND
Date:
Amount:
Modifications to this Bond Form:

CONTRACTOR AS PRINCIPAL
Company: (Corp. Seal)

SURETY
Company: (Corp.Seal)

Signature:_____
Name and Title: Name and Title:

Signature:_____

EJCDC NO. 1910-28a (1984 Edition)
Prepared through the joint efforts of The Surety Assoc. of America. Engineers' Joint Contract Documents Committee. The Associated General Contractors of America, and the American Institute of Architects.

1. The Contractor and the Surety, jointly and severally, bind themselves their heirs, executors, administrators, successors and assigns to the Owner for the performance of the Construction Contract, which is incorporated herein by reference.

2. If the Contractor performs the Construction Contract, the Surety and the Contractor shall have no obligation under this Bond, except to participate in conferences as provided in Subparagraph 3.1.

3. If there is no Owner Default, the Surety's obligation under this Bond shall arise after:

3.1 The Owner has notified the Contractor and the Surety at its address described in Paragraph 10 below, that the Owner is considering declaring a Contractor Default and has requested and attempted to arrange a conference with the Contractor and the Surety to be held not later than fifteen days after receipt of such notice to discuss methods of performing the Construction Contract. If the Owner, the Contractor and the Surety agree, the Contractor shall be allowed a reasonable time to perform the Construction Contract, but such an agreement shall not waive the Owner's right, if any, subsequently to declare a Contractor Default and

3.2 The Owner has declared a Contractor Default and formally terminated the Contractor's right to complete the contract. Such Contractor Default shall not be declared earlier than twenty days after the Contractor and the Surety have received notice as provided in Sub-paragraph 3.1; and

3.3 The Owner has agreed to pay the Balance of the Contract Price to the Surety in accordance with the terms of the Construction Contract or to a contractor selected to perform the Construction Contract in accordance with the terms of the contract with the Owner.

4. When the Owner has satisfied the conditions of Paragraph 3, the Surety shall promptly and at the Surety's expense take one of the following actions:

4.1 Arrange for the Contractor, with consent of the Owner, to perform and complete the Construction Contract, or

4.2 Undertake to perform and complete the Construction Contract itself, through its agents or through independent contractors: or

4.3 Obtain bids or negotiated proposals from qualified contractors acceptable to the Owner for a contract for performance and completion of the Construction Contract, arrange for a contract to be prepared for execution by the Owner and the contractor selected with the Owner's concurrence, to be secured with performance and payment bonds executed by a qualified surety equivalent to the bonds issued on the Construction Contract, and pay to the Owner the amount of damages as described in Paragraph 6 in excess of the Balance of the Contract Price incurred by the Owner resulting from the Contractor's default, or

4.4 Waive its right to perform and complete, arrange for completion, or obtain a new contractor and with reasonable promptness under the circumstances:

1. After investigation, determine the amount for which it may be liable to the Owner and as soon as practiceable after the amount is determined tender payment therefore to the Owner; or

2. Deny liability in whole or in part and notify the Owner citing reasons therefore.

5. If the Surety does not proceed as provided in Paragraph 4 with reasonable promptness, the Surety shall be deemed to be in default on this Bond fifteen days after receipt of an additional written notice from the Owner to the Surety demanding that the Surety perform its obligations under this Bond, and the Owner shall be entitled to enforce any remedy available to the Owner. If the Surety proceeds as provided in Subparagraph 4.4 and the Owner refuses payment tendered or the Surety has denied liability, in whole or in part, without further notice the Owner shall be entitled to enforce any remedy available to the Owner.

6. After the Owner has terminated the Contractor's right to complete the Construction Contract, and if the Surety elects to act under Subparagraph 4.1, 4.2, or 4.3 above, then the responsibilities of the Surety to the Owner shall not be greater than those of the Contractor under the Construction Contract, and the responsibilities of the Owner to the Surety shall not be greater than those of the Owner under the Construction Contract. To the limit of the amount of this Bond, but subject to commitment by the Owner of the Balance of the Contract Price to mitigation of costs and damages on the Construction Contract, the Surety is obligated without duplication for:

6.1 The responsibilities of the Contractor for correction of defective work and completion of the Construction Contract;

6.2 Additional legal, design professional and delay costs resulting from the Contractor's Default, and resulting from the actions or failure to act of the Surety under Paragraph 4; an d

6.3 Liquidated damages, or if no liquidated damages are specified in the Construction Contract, actual damages caused by delayed performance or non-performance of the Contractor.

7. The Surety shall not be liable to the Owner or others for obligations of the Contractor that are unrelated to the Construction Contract, and the Balance of the Contract Price shall not be reduced or set off on account of any such unrelated obligations. No right of action shall accrue on this Bond to any person or entity other than the Owner or its heirs, executors, administrators, or successors.

8. The Surety hereby waives notice of any change, including changes of time, to the Construction Contract or to related sub-contracts, purchase orders and other obligations.

9. Any proceeding, legal or equitable, under this Bond may be instituted in any court of competent jurisdiction in the location in which the work or part of the work is located and shall be instituted within two years after Contractor Default or within two years after the Contractor ceased working or within two years after the Surety refuses or fails to perform its obligations under this Bond, whichever occurs first. If the provisions of this Paragraph are void or prohibited by law, the minimum period of limitation available to sureties as a defense in the jurisdiction of the suit shall be applicable.

10. Notice to the Surety, the Owner or the Contractor shall be mailed or delivered to the address shown on the signature page.

11. When this Bond has been furnished to comply with a satutory or other legal requirement in the location where the construction was to be performed, any provision in this Bond conflicting with said statutory or legal requirement shall be deemed deleted herefrom and provisions conforming to such statutory or other legal requirement shall be deemed incorporated herein. The intent is that this Bond shall be construed as a statutory bond and not as a common law bond.

12. Definitions.

12.1 Balance of the Contract Price: The total amount payable by the Owner to the Contractor under the Construction Contract after all proper adjustments have been made, including allowance to the Contractor of any amounts received or to be received by the Owner in settlement of insurance or other claims for damages to which the Contractor is entitled, reduced by all valid and proper payments made to or on behalf of the Contractor under the Construction Contract.

12.2 Construction Contract: The agreement between the Owner and the Contractor identified on the signature page, including all Contract Documents and changes thereto.

12.3 Contractor Default: Failure of the Contractor, which has neither been remedied nor waived, to perform or otherwise to comply with the terms of the Construction Contract.

12.4 Owner Default: Failure of the Owner, which has neither been remedied nor waived, to pay the Contractor as required by the Construction Contract or to perform and complete or comply with the other terms thereof.

CONSTRUCTION PAYMENT BOND

Any singular reference to Contractor, Surety, Owner or other party shall be considered plural where applicable.

CONTRACTOR (Name and Address):

SURETY (Name and Principal Place Of Business):

Owner (Name and Address):
West Haymarket Joint Public Agency
555 South 10th St.
Lincoln, NE 68508

CONSTRUCTION CONTRACT
Date:
Amount:

Description (Name and Location):
For all labor, material and equipment necessary for (Bid Name and Number)

BOND
Date:
Amount:

Modifications to this Bond Form:

CONTRACTOR AS PRINCIPAL
Company: (Corp. Seal)

SURETY
Company: (Corp. Seal)

Signature: _____

Name and Title:

Signature: _____

Name and Title:

EJCDC NO. 1910-28B (1984 Edition)
Prepared through the joint efforts of The Surety Assoc. of America. Engineers' Joint Contract Documents Committee. The Associated General Contractors of America, and the American Institute of Architects.

1. The Contractor and the Surety, jointly and severally, bind themselves their heirs, executors, administrators, successors and assigns to the Owner to pay for labor, materials and equipment furnished for use in the performance of the Construction Contract, which is incorporated herein by reference.
2. With respect to the Owner, this obligation shall be null and void if the Contractor:

   2.1 Promptly makes payment, directly or indirectly, for all sums due Claimants, and

   2.2 Defends, indemnifies and holds harmless the Owner from all claims, demands, liens or suits by any person or entity who furnished labor, materials or equipment for use in the performance of the Construction Contract, provided the Owner has promptly notified the Contractor and the Surety (at the address described in Paragraph 12) of any claims, demands, liens or suits and tendered defense of such claims, demands, liens or suits to the Contractor and the Surety, and provided there is no Owner Default.
3. With respect to Claimants, this obligation shall be null and void if the Contractor promptly makes payment, directly or indirectly, for all sums due.
4. The Surety shall have no obligation to Claimants under this Bond until:

   4.1 Claimants who do not have a direct contract with the Contractor have given notice to the Surety (at the address described in Paragraph 12) and sent a copy, or notice thereof to the Owner, stating that a claim is being made under this Bond and with substantial accuracy the amount of the claim.

   4.2 Claimants who do not have a direct contract with the Contractor:

   1.Have furnished written notice to the Contractor and sent a copy, or notice thereof, to the Owner, within 90 days after having last performed labor or last furnished materials or equipment included in the claim stating, with substantial accuracy, the amount of the claim and the name of the party to whom the materials were furnished or supplied or for whom the labor was done or performed, and

   2.Have either received a rejection in whole or in part from the Contractor, or not received within 30 days of furnishing the above notice any communication from the Contractor by which the Contractor has indicated the claim will be paid directly or indirectly; and

   3.Not having been paid within the above 30 days, have sent a written notice to the Surety (at the address described in Paragraph 12) and sent a copy, or notice thereof, to the Owner, stating that a claim is being made under this Bond and enclosing a copy of the previous written notice furnished to the Contractor.
5. If a notice required by Paragraph 4 is given by the Owner to the Contractor or to the Surety, that is sufficient compliance.
6. When the Claimant has satisfied the conditions of Paragraph 4, the Surety shall promptly and at the Surety's expense take the following actions:

   6.1 Send an answer to the Claimant, with a copy to the Owner, within 45 days after receipt of the claim, stating the amounts that are undisputed and the basis for challenging any amounts that are disputed.

   6.2 Pay or arrange for payment of any undisputed amounts.
7. The Surety's total obligation shall not exceed the amount of this Bond, and the amount of this Bond shall be credited for any payments made in good faith by the Surety.
8. Amounts owed by the Owner to the Contractor under the Construction Contract shall be used for the performance of the Construction Contract and to satisfy claims, if any, under any Construction Performance Bond. By the Contractor furnishing and the Owner accepting this Bond, they agree that all funds earned by the Contractor in the performance of the Construction Contract are dedicated to satisfy obligations of the Contractor and the Surety under this Bond, subject to the Owner's priority to the funds for the completion of the work.
9. The Surety shall not be liable to the Owner, Claimants or others for obligations of the Contractor that are unrelated to the Construction Contract. The Owner shall not be liable for payment of any costs or expenses of any Claimant under this Bond, and shall have under this Bond no obligations to make payments to, give notices on behalf of, or otherwise have obligations to Claimants under this Bond.
10. The Surety hereby waives notice of any change, including changes of time, to the Construction Contract or to related subcontracts, purchase orders and other obligations.
11. No suite or action shall be commenced by a Claimant under this Bond other than in a court of competent jurisdiction in the location in which the work or part of the work is located or after the expiration of one year from the date (1) on which the Claimant gave the notice required by Subparagraph 4.1 or Clause 4.1 (iii), or (2) on which the last labor or service was performed by anyone or the last materials or equipment were furnished by anyone under the Construction Contract, whichever of (1) or (2) first occurs. If the provisions of this Paragraph are void or prohibited by law, the minimum period of limitation available to sureties as a defense in the jurisdiction of the suit shall be applicable.
12. Notice to the Surety, the Owner or the Contractor shall be mailed or delivered to the address shown on the signature page. Actual receipt of notice by Surety, the Owner or the Contractor, however accomplished, shall be sufficient compliance as of the date received at the address shown on the signature page.
13. When this Bond has been furnished to comply with a statutory or other legal requirement in the location where the construction was to be performed, any provision in this Bond conflicting with said statutory or legal requirement shall be deemed deleted here from and provisions conforming to such statutory or other legal requirement shall be deemed incorporated herein. The intent is, that this Bond shall be construed as a statutory bond and not as a common law bond.
14. Upon request by any person or entity appearing to be a potential beneficiary of this Bond, the Contractor shall promptly furnish a copy of this Bond or shall permit a copy to be made.
15. DEFINITIONS

    15.1 Claimant: An individual or entity having a direct contract with the Contractor or with a subcontractor of the Contractor to furnish labor, materials or equipment for use in the performance of the Contract. The intent of this Bond shall be to include without limitation in the terms "labor, materials, or equipment" that part of water, gas, power, light, heat, oil, gasoline, telephone service or rental equipment used in the Construction Contract, architectural and engineering services required for performance of the work of the Contractor and the Contractor's subcontractors, and all other items for which a mechanic's lien may be asserted in the jurisdiction where the labor, materials or equipment were furnished.

    15.2 Construction Contract: The agreement between the Owner and the Contractor identified on the signature page, including all Contract Documents and changes thereto.

    15.3 Owner Default: Failure of the Owner, which has neither been remedied nor waived, to pay the Contractor as required by the Construction Contract or to perform and complete or comply with the other terms thereof.

(FOR INFORMATION ONLY - NAME, ADDRESS AND TELEPHONE)
AGENT OR BROKER: OWNER'S REPRESENTATIVE (ARCHITECT, ENGINEER OR OTHER PARTY)

INDEMNIFICATION AND INSURANCE REQUIREMENTS
FOR ALL WEST HAYMARKET JOINT
PUBLIC AGENCY CONTRACTS

1. INDEMNIFICATION

A. **Indemnification of JPA**

TO THE FULLEST EXTENT PERMITTED BY LAW, CONTRACTOR SHALL RELEASE, INDEMNIFY, DEFEND AND HOLD HARMLESS JPA AND JPA'S MEMBERS, SUCCESSORS, ASSIGNS, LEGAL REPRESENTATIVES, OFFICERS, EMPLOYEES AND AGENTS FOR, FROM AND AGAINST ANY AND ALL CLAIMS, LIABILITIES, FINES, PENALTIES, COSTS, DAMAGES, LOSSES, LIENS, CAUSES OF ACTION, SUITS, DEMANDS, JUDGMENTS AND EXPENSES (INCLUDING, WITHOUT LIMITATION, COURT COSTS AND ATTORNEYS' FEES) OF ANY NATURE, KIND OR DESCRIPTION OF ANY PERSON (INCLUDING, WITHOUT LIMITATION, THE EMPLOYEES OF THE PARTIES HERETO) (COLLECTIVELY, "LIABILITIES") ARISING OUT OF, RESULTING FROM OR CAUSALLY RELATED TO (IN WHOLE OR IN PART), PERFORMANCE OF THE CONTRACT THAT RESULTS IN BODILY INJURY, SICKNESS, DISEASE, OR DEATH CAUSED IN WHOLE OR IN PART BY ANY ACT OR OMMISSION OF THE CONTRACTOR, ANY SUBCONTRACTOR, ANYONE DIRECTLY OR INDIRECTLY EMPLOYED BY ANY OF THEM, OR ANYONE FOR WHOSE ACTS ANY OF THEM MAY BE LIABLE WHETHER OR NOT IT IS CAUSED IN WHOLE OR PART BY A PARTY INDEMNIFIED HEREUNDER.

Such indemnification shall not be construed to negate, abridge, limit or otherwise reduce any other right or obligation of indemnity which would otherwise exist as to any party or person described in this section.

B. In any and all claims by any employee (whether an employee of the Contractor or subcontractor, or their respective agents or assigns or by anyone directly or indirectly employed by any of them or anyone for whose acts any of them may be liable as an employer) in whole or in part against JPA, its officers, agents, employees, volunteers or consultants, the above indemnification shall not be limited in any way by the amount of damages, compensation, benefits or other contributions payable by or on behalf of a the employer under Worker's Compensation statutes, disability benefit acts, or any other employee benefit or payment acts as the case may be.

C. The obligations of indemnification herein shall not include or extend to:

(1) Any outside engineer's or architect's professional errors and omissions involving the approval or furnishing of maps, drawings, opinions, reports, surveys, change orders, designs or specifications within the scope of professional services provided to JPA and related to the Contract; and

(2) Any claims wholly caused by the JPA's sole negligence and excluding claims to the extent such claims are caused by the willful misconduct or gross negligence of the JPA.

D. In the event of any litigation of any such claims shall be commenced against JPA, Contractor shall defend the same at Contractor's sole expense upon notice thereof from JPA. Contractor shall notify the insuring company that JPA reserves and does not waive any statutory or governmental immunity and neither Contractor, nor Contractor's counsel whether employed by Contractor or by an insurer on behalf of the Contractor shall waive such defenses or enter into any settlement or other disposition requiring waiver of any defenses or immunity of JPA without the express written consent of the JPA.

2. INSURANCE GENERAL PROVISIONS

A. **Approved Coverage Prior to Commencing Work/Subcontractors Included.** Contractor shall purchase and maintain in place insurance to protect Contractor and JPA, its officers, agents, employees, volunteers and consultants from and against all liabilities and hazards as provided in these insurance requirements throughout the duration of the Contract. Contractor shall not commence work under this contract until the Contractor has obtained all insurance required under Section 2. below and such insurance has been approved by the City Attorney for JPA, nor shall the Contractor allow any subcontractor to commence work on any subcontract until all similar insurance required of the subcontractor has been so obtained and approved.

B. **Occurrence Basis Coverage.** All insurance shall be provided on an occurrence basis and not on a claims made basis, except for hazardous materials, errors and omissions, or other coverage not reasonably available on an occurrence basis; provided that all such claims made coverage is subject to the prior written approval of the City Attorney and must be clearly indicated as such in any certificate showing coverage.

C. **Authorized and Rated Insurers Required.** All insurance coverage are to be placed with insurers authorized to do business in the State of Nebraska and must be placed with an insurer that has an A.M. Best's Rating of no less than A:VII unless specific approval has been granted by the City Attorney.

D. **Certificates Showing Coverage**. Prior to commencing the Work, Contractor must furnish to JPA adequate written documentation including certificate(s) of insurance, which have the original signature of the authorized representative, declaration pages or other acceptable policy information evidencing the required coverage, endorsements, and amendments. The policy(ies) must contain a provision that obligates the insurance company(ies) issuing such policy(ies) to notify JPA in writing at least 30 days prior to any cancellation, except that only ten (10) days prior notice is required for cancellation due to nonpayment of premium. Upon request from JPA, a certified duplicate original of any required policy must be furnished. Certificate(s) should be sent to the following address:

West Haymarket Joint Public Agency
c/o City Attorney
City of Lincoln, Nebraska
555 South 10th Street
Lincoln, NE 68508

Certificates of insurance may utilize an appropriate standard ACORD Certificate of Insurance form showing the specific limits of insurance coverage required by this Article; provided that restrictions, qualifications or declarations inconsistent with the requirements of this Article shall not relieve the Contractor from providing insurance as required herein. Such certificates shall show JPA as additional insured except for applicable Worker's Compensation coverage, to include all work performed for JPA and specifically including, but not limited to, any liability caused or contributed to by the act, error, or omission of the Contractor, including any related subcontractors, third parties, agents, employees, officers or assigns of any of them. The inclusion of JPA as additional insured shall be for coverage only on a primary basis for liability coverage, and no coverage shall contain a policy or other restriction or attempt to provide restricted coverage for JPA, whether on an excess, contributory or other basis regardless of any other insurance coverage available to JPA, including by specific endorsement where necessary, as indicated in the following requirements.

E. **Terminology.** The terms "insurance," "insurance policy," or "coverage" as used in this article are used interchangeably and shall have the same meaning as "insurance" unless the context clearly requires otherwise. References to "ISO®" forms are merely for convenience and ease of reference, and an equivalent or better form as determined acceptable by the City Attorney may be used. (Note: ISO® is a registered trademark of ISO Properties, Inc.)

F. **Other Requirements**. Contractor agrees to waive its right of recovery against JPA for all claims and suits against JPA, except for claims and suits arising wholly out of the sole negligence, or to the extent caused by the gross negligence or willful misconduct, of JPA. In addition, its insurers, through the terms of the policy or policy endorsement, waive their right of subrogation against JPA for all claims and suits, except for claims and suits arising wholly out of the sole negligence, or to the extent caused by the gross negligence of willful misconduct, of JPA. The certificate of insurance must reflect the waiver of subrogation endorsement. Contractor further waives its right of recovery, and its insurers also waive their right of subrogation against JPA for loss of its owned or leased property or property under Contractor's care, custody or control, except for the right of recovery or right of subrogation arising wholly out of the sole negligence, or to the extent caused by the gross negligence or willful misconduct, of JPA.

Contractor is not allowed to self-insure without the prior written consent of JPA. If granted by JPA, any deductible, self-insured retention or other financial responsibility for claims must be covered directly by Contractor in lieu of insurance. Any and all JPA liabilities that would otherwise, in accordance with the provisions of this Agreement, be covered by Contractor's insurance will be covered as if Contractor elected not to include a deductible, self-insured retention or other financial responsibility for claims.

Upon notification to JPA of cancellation, non-removal, substitution or material alteration of any such policy(ies), JPA shall have the option to (i) if feasible, pay, on behalf of the Contractor, any and all such premiums, penalties, fees for expenses necessary to keep such policy(ies) in full force and effect; or (ii) in the event that such policy(ies) cannot be kept in full force and effect, enter into the open market to procure such policy(ies) of insurance on behalf of Contractor as required by this Agreement at the then current market rate. Upon any of the above occurrences, JPA shall invoice the Contractor for reimbursement of such premiums, penalties, fees, or expenses advanced on the JPA's behalf plus an additional fifteen percent (15%) of such advanced amounts as remuneration for JPA's overhead. Such amounts advanced by JPA shall be paid by the Contractor within thirty (30) days after delivery of a statement for such expense.

Contractor represents that this Agreement has been thoroughly reviewed by Contractor's insurance agent(s)/broker(s), who have been instructed by Contractor to procure the insurance coverage required by this Agreement. Allocated Loss Expense must be in addition to all policy limits for coverages referenced above.

If any portion of the operation is to be subcontracted by Contractor, Contractor must require that its subcontractors provide and maintain the insurance coverages set forth herein, naming JPA as an additional insured, and requiring that the subcontractors release, defend and indemnify JPA to the same extent and under the same terms and conditions as Contractor is required to release, defend and indemnify JPA herein.

Failure to provide evidence as required by Section 2. will entitle, but not require, JPA to immediately suspend work under this Agreement until such evidence is provided. Acceptance of a certificate that does not comply with this section will not operate as a waiver of Contractor's obligations hereunder. The fact that insurance (including, without limitation, self-insurance) is obtained by Contractor will not be deemed to release or diminish the liability of Contractor including, without limitation, liability under the indemnity provisions of this Agreement. Damages recoverable by JPA will not be limited by the amount of the required insurance coverage.

3. INSURANCE REQUIREMENTS

A. **Scope of Required Coverage.** The Contractor shall take out and maintain during the life of the Contract such insurance in the forms and minimum amounts as specified in this Section and as will protect Contractor and JPA from the following claims arising out of or resulting from or in connection with the Contractor's operations, undertakings or omissions directly or indirectly related to the Contract, whether by the Contractor or any Subcontractor or anyone directly or indirectly employed by any of them, or by anyone for whose acts any of them may be liable:

(1) Claims under workers' compensation, disability benefit, or other employee benefit acts;

(2) Claims arising out of bodily injury, occupational sickness or disease, or death of an employee or any other person;

(3) Claims customarily covered under personal injury liability coverage;

(4) Claims other than to the work itself arising out of an injury to or destruction of tangible property, including the loss of use resulting therefrom;

(5) Claims arising out of ownership, maintenance or use of any motor vehicle;

(6) Railroad protective liability coverage in the event the contract involves work to be performed within 50 feet of any railroad property and affecting any railroad bridge or trestle, tracks, road beds, tunnel, underpass or crossing.

B. **Worker's Compensation Insurance and Employer's Liability Insurance.** The Contractor shall provide applicable statutory Worker's Compensation Insurance with minimum limits as provided below covering all Contractor's employees, and in the case of any subcontracted work, the Contractor shall require the subcontractor similarly to provide Worker's Compensation Insurance for Subcontractor's employees. This policy shall contain the following endorsement or language: "Waiver of subrogation in favor of JPA."

The Contractor shall provide Employer's Liability Insurance with minimum limits as provided below placed with an insurance company authorized to write such insurance in all states where the Contractor will have employees located in the performance of this contract, and the Contractor shall require each Subcontractor similarly to maintain Employer's Liability Insurance on the Subcontractor's employees.

Coverage	**Listing**	**Min Amt**	**Notes**
Worker's Comp.			
	State	Statutory	
	Applicable Federal	Statutory	
Employer's Liability			
	Bodily Injury by accident	$500,000	each accident
	Bodily Injury by disease	$500,000	each employee
	Bodily Injury	$500,000	policy limit

C. **Commercial General Liability Insurance.**

(1) The Contractor shall provide Commercial General Liability Insurance in a policy form providing broad form contractual liability no less comprehensive and no more restrictive coverage than provided under the ISO® form CG00010798 or newer with standard exclusions "a" through "o" and with minimum limits as provided below.

Coverage	Min Amt	Notes
General	$5,000,000/$10,000,000	Each Occurrence/Aggregate
Products and Completed Operations	$5,000,000/$10,000,000	Each Occurrence/Aggregate
Personal and Advertising Injury	$5,000,000/$10,000,000	Each Occurrence/Aggregate
Fire Damage Limit	$ 100,000	any one fire
Medical Damage Limit	$ 10,000	any one person

(2) The required Commercial General Liability Insurance shall also include coverage for the following:

- Bodily injury and property damage.
- Fire legal liability
- Coverage for all premises and operations.
- Personal and advertising injury.
- Operations by independent contractors.
- X.C.U. Coverage including coverage for demolition of any building or structure, collapse, explosion, blasting, excavation and damage to property below the surface of ground.
- Any fellow employee exclusions shall be deleted.
- Coverage shall not contain an absolute pollution exclusion, and applicable remaining coverage shall apply for pollution exposures arising from products and completed operations.
- Coverage for products and completed operations maintained for duration of work and shall be maintained for a minimum of three years after final acceptance under the Contract or the warranty period for the same whichever is longer, unless modified in any Special Provisions.
- Liability coverage which shall include contractually assumed defense costs in addition to any policy limits.
- Contractual liability coverage.

(3) This policy shall also include the following endorsements which shall be indicated on the Certificate of Insurance.

- The definition of insured contract shall be amended to remove any exclusion or other limitation for work being done within 50 feet of railroad property.
- Endorsement to provide the general aggregate per project endorsement.
- Endorsement to provide waiver of subrogation in favor of and acceptable to JPA.
- Endorsement to provide that the policy shall be primary and non-contributory with respect to any insurance carried by the JPA.
- Separation of insureds.
- Additional insured endorsement in favor of and acceptable to the JPA.

(4) If work is to be performed within 50 feet of any railroad property and affecting any railroad bridge or trestle, tracks, road beds, tunnel, underpass or crossing, Railroad Contractual Liability Endorsement (ISO® form CG24170196 or newer). The definition of insured contract shall be amended to remove any exclusion or other limitation for any work done within fifty (50) feet of railroad property.

D. **Vehicle liability insurance coverage.**

The Contractor shall provide reasonable insurance coverage for all owned, non-owned, hired and leased vehicles. This insurance shall contain a combined single limit of at least $1,000,000 per occurrence, and include coverage for, but not limited to the following:

- Bodily injury and property damage
- Any and all vehicles owned, used or hired

This policy shall also contain the following endorsements or language, which shall be indicated on the certificate of insurance:

- Waiver of subrogation in favor of and acceptable to JPA.
- Additional insured endorsement in favor or and acceptable to JPA.
- Separation of insureds.
- The policy shall be primary and non-contributing with respect to any insurance carried by JPA.
- Endorsements to include contractual liability coverage and delete any fellow employee exclusion.
- If specifically required in the Special Provisions, the required coverage shall also include an endorsement for auto cargo pollution (ISO® form CA 99 48).

E. **Umbrella/Excess Insurance.** At the Contractor's option, the Commercial General Liability Insurance coverage limits specified in Section 3.C. above may be satisfied with a combination of primary and Umbrella/Excess Insurance.

F. **Railroad Protective Liability.** If work is to be performed within 50 feet of any railroad property and affecting any railroad bridge or trestle, tracks, road beds, tunnel, underpass or crossing or otherwise required by the Special Provisions or applicable requirements of an affected railroad, the Contractor shall provide Railroad Protective Liability Insurance naming the affected railroad/s as insured with minimum limits for bodily injury and property damage of $5,000,000 per occurrence, $10,000,000 aggregate, or such other limits as required in the Special Provisions or by the affected railroad. The original of the policy shall be furnished to the railroad and a certified copy of the same furnished to the City Attorney's office prior to any related construction or entry upon railroad premises by the Contractor or for work related to the Contract.

The policy shall be issued on a standard ISO form CG 00 35 10 93 and include the following endorsements:

- Endorsed to include the Pollution Exclusion Amendment (ISO form CG 28 31 10 93)
- Endorsed to include the Limited Seepage and Pollution Endorsement.

No other endorsements restricting coverage may be added. The original policy must be provided to Railroad prior to performing any work or services under this C&M Agreement.

In lieu of providing a Railroad Protective Liability Policy, Contractor may participate in ANY RAILROAD'S Blanket Railroad Protective Liability Insurance Policy available to JPA and JPA Contractors.

G. **Special Provision.** At the JPA's option, the minimum insurance requirements specified above may be increased or decreased by special provision in a JPA contract.

4. CONTRACTOR'S INSURANCE FOR OTHER LOSSES.

A. Contractor shall assume full responsibility for all loss or damage from any cause whatsoever to any tools owned, rented or used in connection with the Contract including any tools, machinery, equipment, storage devices, containers, sheds, temporary structures, staging structures, scaffolding, fences, forms, braces, jigs, screens, brackets, vehicles and the like owned or rented by Contractor, or Contractor's agents, subcontractors, suppliers, or employees.

B. In connection with the above, Contractor shall cause or require any applicable insurance related to physical damage of the same to provide a waiver of a right of subrogation against JPA.

5. NOTIFICATION IN EVENT OF LIABILITY OR DAMAGE.

A. The Contractor shall promptly notify JPA in writing and provide a copy of all claims and information presented to any of Contractor's insurance carrier/s upon any loss or claim or upon any occurrence giving rise to any liability or potential liability related to the Contract or related work. The notice to JPA shall include pertinent details of the claim or liability and an estimate of damages, names of witnesses, and other pertinent information including the amount of the claim, if any.

B. In the event JPA receives a claim or otherwise has actual knowledge of any loss or claim arising out of the Contract or related work and not otherwise known to or made against the Contractor, JPA shall promptly notify the Contractor of the same in writing, including pertinent details of the claim or liability; Provided, however JPA shall have no duty to inspect the project to obtain such knowledge, and provided further that JPA's obligations, if any, shall not relieve the Contractor of any liability or obligation hereunder.

6. PROPERTY INSURANCE/ BUILDER'S RISK.

A. The Contractor shall provide property insurance (a/k/a Builder's Risk or installation Floater) on all Projects involving construction or installation of buildings or structures and other projects where provided in the Special Provisions. Such insurance shall be provided in the minimum amount of the total contract sum and in addition applicable modifications thereto for the entire work on a replacement cost basis. Such insurance shall be maintained until JPA completes final acceptance of the work as provided in the Contract. Such insurance shall be written and endorsed, where applicable, to include the interests of JPA, Contractor, Subcontractors, Sub-subcontractors in the related work. The maximum deductible for such insurance shall be $5,000 for each occurrence, which deductible shall be the responsibility of the Contractor. Such insurance shall contain a "permission to occupy" endorsement.

B. All related Property Insurance shall be provided on a "Special Perils" or similar policy form and shall at a minimum insure against perils of fire including extended coverage and physical loss or damage including without limitation or duplication of coverage: flood, earthquake, theft, vandalism, malicious mischief, collapse, and debris removal, including demolition whether occasioned by the loss or by enforcement of applicable legal or safety requirements including compensation or costs for JPA's related costs and expenses (as owner) including labor required as a result of such loss.

C. All related Property Insurance shall include coverage for falsework, temporary buildings, work stored off-site or in-transit to the site, whether in whole or in part. Coverage for work off-site or in-transit shall be a minimum of 10% of the amount of the policy.

D. The Contractor's Property Insurance shall be primary coverage for any insured loss related to or arising out of the Contract and shall not be reduced by or coordinated with separate property insurance maintained by JPA.

smart # 10070200
7-26-10/law/tb

CITY OF LINCOLN
MAYOR CHRIS BEUTLER

CITY OF LINCOLN
EXECUTIVE ORDER

NO. 083319

WHEREAS, there is concern over the inappropriate competitive advantages in the public bidding process for local publicly funded construction and delivery service contracts resulting from the misclassification of individuals performing construction labor services as "independent contractors" rather than "employees"; such "independent contractors" are commonly referred to as "1099 workers" due to the IRS form they receive rather than a W-4 which an employee receives;

WHEREAS, this misclassification of such individuals as "independent contractors" rather than as "employees" eliminates any obligation to pay these individuals legally required minimum or overtime wages, to provide legally required workers' compensation insurance, to make unemployment insurance payments, to pay legally required employment and payroll taxes, and to provide any other health, pension, or benefit such individuals would typically receive if properly classified as employees;

WHEREAS, this misclassification of individuals performing construction labor services for the contractor as "independent contractors" rather than "employees" is a violation of federal and state law, but is difficult to enforce once public construction or delivery service contracts have been bid, awarded, and entered into;

WHEREAS, the use of public funds to compensate contractors who unlawfully avoid their obligation to pay legally required minimum or overtime wages, to provide legally required workers' compensation insurance, to make unemployment insurance payments, to pay legally required employment and payroll taxes, and to provide any other health, pension, or benefit is not in the public interest; and

WHEREAS, the Employee Classification Act, Neb. Rev. Stat. §§ 48-2901 to 48-2912 (effective July 15, 2010) provides that any contract entered into between a political subdivision and a contractor shall require that each contractor who performs construction or delivery service pursuant to the contract submit to the political subdivision an affidavit attesting that (1) each individual performing services for such contractor is properly classified under the Employee Classification Act, (2) such contractor has completed a federal I-9 immigration form and has such form on file for each employee performing services, (3) such contractor has complied with Neb. Rev. Stat. § 4-114 requirements that the contractor register and use a federal immigration employment verification system to determine the work eligibility status of new employees physically performing services in the State of Nebraska, (4) such contractor has no reasonable basis to believe that any individual performing services for such contractor is an undocumented worker, and (5) as of the time of the contract, such contractor is not barred from contracting with the state or any political subdivision pursuant to § 48-2912 of the Employee Classification Act.

NOW, THEREFORE, BY VIRTUE OF THE AUTHORITY VESTED IN ME by the Charter of the City of Lincoln, I hereby establish the following policy as to the bid and award of contracts to contractors for construction and delivery services with the City of Lincoln:

The Purchasing Agent shall immediately include in the City of Lincoln's notice to bidders for construction contracts that all contractors submitting bids in response to the notice shall affirmatively certify to the Purchasing Agent that all individuals hired to perform construction or delivery labor services for the contractor under the contract shall be properly classified as employees and not as independent contractors if the individual does not meet the requirements of an independent contractor under federal and state law (including the requirements of the State of Nebraska Employee Classification Act), and that the contractor will comply with all legal obligations with respect to these employees (including, but not limited to, minimum and overtime pay, workers' compensation, unemployment compensation, and payment of federal and state payroll taxes). The

notice to bidders shall further provide that contractors may use affidavits required pursuant to the Employee Classification Act for this purpose, but that a failure to make the affirmative certification to the Purchasing Agent shall render the bidder ineligible for award of the contract.

The Purchasing Agent shall immediately include the following provisions in contracts for construction or delivery services:

(1) Contractor agrees that each individual performing services for the contractor shall be properly classified as an employee and not as an independent contractor if the individual does not meet the requirements of an independent contractor under the State of Nebraska's Employee Classification Act and that contractor shall comply with all legal obligations with respect to the employee (including, but not limited to, minimum and overtime pay, workers' compensation, unemployment compensation, and payment of federal and state payroll taxes).

(2) Contractor understands and agrees that failure to classify each individual hired to perform services under the contract as an employee rather than as an independent contractor if the individual does not meet the requirements of an independent contractor under the State of Nebraska's Employee Classification Act and/or failure to comply with legal obligations with respect to the employee (including, but not limited to, minimum and overtime pay, workers' compensation, unemployment compensation, and payment of federal and state payroll taxes) shall be considered a breach of the contract and is a grounds for rescission of the contract by the City.

(3) Contractor additionally agrees to include the following provisions in each subcontract entered into with a subcontractor as part of the contractor's contract with the City:

(a) Subcontractor agrees that each individual performing services for the subcontractor shall be properly classified as an employee and not as an independent contractor if the individual does not meet the requirements of an independent contractor under the State of Nebraska's Employee Classification Act and that subcontractor shall comply with all legal obligations with respect to the employee (including, but not limited to, minimum and overtime pay,

workers' compensation, unemployment compensation, and payment of federal and state payroll taxes).

(b) Subcontractor understands and agrees that subcontractor's failure to properly classify individuals hired to perform services under the subcontract as employees and not as independent contractors if the individual does not meet the requirements of an independent contractor under the State of Nebraska's Employee Classification Act and/or failure to comply with legal obligations with respect to the employee (including, but not limited to, minimum and overtime pay, workers' compensation, unemployment compensation, and payment of federal and state payroll taxes) shall be considered a breach of the contract and is a grounds for rescission of the subcontract by the contractor.

(4) Contractor agrees that if subcontractor fails to or is suspected of failing to properly classify each individual hired pursuant to the subcontract as an employee and not as an independent contractor if the individual does not meet the requirements of an independent contractor under the State of Nebraska's Employee Classification Act and/or fails to comply with legal obligations with respect to the subcontractor's employee, the contractor shall take appropriate corrective action including, but not limited to, reporting the suspected violation of the State of Nebraska Employee Classification Act to the Nebraska Department of Labor or rescission of the subcontract by the contractor. Written notification of the corrective action shall be submitted to the City of Lincoln Purchasing Department. Contractor understands and agrees that contractor's failure to take appropriate corrective action shall be considered a breach of the contractor's contract with the City of Lincoln and is a grounds for rescission of the contract by the City.

(5) The City of Lincoln shall notify the Nebraska Department of Labor of any contractor or subcontractor it has determined is in breach of contract due to the terms of this order.

(6) Any contractor or subcontractor who shall have been determined by the Nebraska Department of Labor to have knowingly provided a false affidavit to the City of Lincoln

under the State of Nebraska's Employee Classification Act shall be referred to the Purchasing Agent of the City who shall determine whether to declare such contractor or subcontractor an irresponsible bidder who shall be disqualified from receiving any business from the municipality for a stated period of time, in accordance with Lincoln Municipal Code § 2.18.030(n)(1) or (2).

(7) This policy does not prohibit a contractor or subcontractor from hiring individuals to perform construction labor services as independent contractors, provided that the contractor's or subcontractor's use of such individuals as an independent contractor complies with the criteria found in subdivision 5 of Neb. Rev. Stat. § 48-604 and is otherwise valid under federal and state law and is not intended to circumvent lawful obligations under federal and state law or city contractual requirements.

The City Clerk is directed to send a copy of this Executive Order to Vince Mejer, City Purchasing Agent, for his record.

Dated this 28 day of July, 2010.

Chris Beutler, Mayor of Lincoln

Approved as to Form & Legality:

City Attorney

EMPLOYEE CLASSIFICATION ACT AFFIDAVIT

For the purposes of complying with THE NEBRASKA EMPLOYEE CLASSIFICATION ACT, I, _____, herein below known as the Contractor, state under oath and swear as follows:

1. Each individual performing services for the Contractor is properly classified under the Employee Classification Act.

2.The Contractor has completed a federal I-9 immigration form and has such form on file for each employee performing services.

3. The Contractor has complied with Neb Rev Stat 4-114.

4. The Contractor has no reasonable basis to believe that any individual performing services for the Contractor is an undocumented worker.

5. The Contractor is not barred from contracting with the state or any political subdivision pursuant to section 12 of this Act.

6. As the Contractor I understand that pursuant to the Employee Classification Act a violation of the Act by a contractor is grounds for rescission of the contract by the City. I understand that pursuant to the Act any contractor who knowingly provides a false affidavit may be subject to criminal penalties and upon a second or subsequent violation shall be barred from contracting with the City for a period of three years after the date of discovery of the falsehood.

I hereby affirm and swear that the statements and information provided on this affidavit are true, complete and accurate. The undersigned person does hereby agree and represent that he or she is legally capable to sign this affidavit and to lawfully bind the Contractor to this affidavit.

PRINT NAME: _____
(First, Middle, Last)

SIGNATURE: _____

TITLE: _____

State of Nebraska)
) ss.
County of _____)

This affidavit was signed and sworn to before me, the undersigned Notary Public, on this ____ day of _____, 20__.

_____
Notary Public

EXHIBIT D TO CONTRACT AGREEMENT

29 C.F.R. § 5.5

Code of Federal Regulations Currentness
Title 29. Labor
Subtitle A. Office of the Secretary of Labor
Part 5. Labor Standards Provisions Applicable to Contracts Covering Federally Financed and Assisted Construction (Also Labor Standards Provisions Applicable to Nonconstruction Contracts Subject to the Contract Work Hours and Safety Standards Act)
Subpart A. Davis-Bacon and Related Acts Provisions and Procedures
§ 5.5 Contract provisions and related matters.

(a) The Agency head shall cause or require the contracting officer to insert in full in any contract in excess of $2,000 which is entered into for the actual construction, alteration and/or repair, including painting and decorating, of a public building or public work, or building or work financed in whole or in part from Federal funds or in accordance with guarantees of a Federal agency or financed from funds obtained by pledge of any contract of a Federal agency to make a loan, grant or annual contribution (except where a different meaning is expressly indicated), and which is subject to the labor standards provisions of any of the acts listed in § 5.1, the following clauses (or any modifications thereof to meet the particular needs of the agency, *Provided*, That such modifications are first approved by the Department of Labor):

(1) Minimum wages.

(i) All laborers and mechanics employed or working upon the site of the work (or under the United States Housing Act of 1937 or under the Housing Act of 1949 in the construction or development of the project), will be paid unconditionally and not less often than once a week, and without subsequent deduction or rebate on any account (except such payroll deductions as are permitted by regulations issued by the Secretary of Labor under the Copeland Act (29 CFR part 3)), the full amount of wages and bona fide fringe benefits (or cash equivalents thereof) due at time of payment computed at rates not less than those contained in the wage determination of the Secretary of Labor which is attached hereto and made a part hereof, regardless of any contractual relationship which may be alleged to exist between the contractor and such laborers and mechanics.

Contributions made or costs reasonably anticipated for bona fide fringe benefits under section 1 (b)(2) of the Davis-Bacon Act on behalf of laborers or mechanics are considered wages paid to such laborers or mechanics, subject to the provisions of paragraph (a)(1)(iv) of this section; also, regular contributions made or costs incurred for more than a weekly period (but not less often than quarterly) under plans, funds, or programs which cover the particular weekly period, are deemed to be constructively made or incurred during such weekly period. Such laborers and mechanics shall be paid the appropriate wage rate and fringe benefits on the wage determination for the classification of work actually performed, without regard to skill, except as provided in § 5.5(a)(4). Laborers or mechanics performing work in more than one classification may be compensated at the rate specified for each classification for the time actually worked therein: *Provided*, That the employer's payroll records accurately set forth the time spent in each classification in which work is performed. The wage determination (including any additional classification and wage rates conformed under paragraph (a)(1)(ii) of this section) and the Davis-Bacon poster (WH-1321) shall be posted at all times by the contractor and its subcontractors at the site of the work in a prominent and accessible place where it can be easily seen by the workers.

(ii)(A) The contracting officer shall require that any class of laborers or mechanics, including helpers, which is not listed in the wage determination and which is to be employed under the contract shall be classified in conformance with the wage determination. The contracting officer shall approve an additional classification and wage rate and fringe benefits therefore only when

the following criteria have been met:

(1) The work to be performed by the classification requested is not performed by a classification in the wage determination; and

(2) The classification is utilized in the area by the construction industry; and

(3) The proposed wage rate, including any bona fide fringe benefits, bears a reasonable relationship to the wage rates contained in the wage determination.

(B) If the contractor and the laborers and mechanics to be employed in the classification (if known), or their representatives, and the contracting officer agree on the classification and wage rate (including the amount designated for fringe benefits where appropriate), a report of the action taken shall be sent by the contracting officer to the Administrator of the Wage and Hour Division, Employment Standards Administration, U.S. Department of Labor, Washington, DC 20210. The Administrator, or an authorized representative, will approve, modify, or disapprove every additional classification action within 30 days of receipt and so advise the contracting officer or will notify the contracting officer within the 30-day period that additional time is necessary.

(C) In the event the contractor, the laborers or mechanics to be employed in the classification or their representatives, and the contracting officer do not agree on the proposed classification and wage rate (including the amount designated for fringe benefits, where appropriate), the contracting officer shall refer the questions, including the views of all interested parties and the recommendation of the contracting officer, to the Administrator for determination. The Administrator, or an authorized representative, will issue a determination within 30 days of receipt and so advise the contracting officer or will notify the contracting officer within the 30-day period that additional time is necessary.

(D) The wage rate (including fringe benefits where appropriate) determined pursuant to paragraphs (a)(1)(ii)(B) or (C) of this section, shall be paid to all workers performing work in the classification under this contract from the first day on which work is performed in the classification.

(iii) Whenever the minimum wage rate prescribed in the contract for a class of laborers or mechanics includes a fringe benefit which is not expressed as an hourly rate, the contractor shall either pay the benefit as stated in the wage determination or shall pay another bona fide fringe benefit or an hourly cash equivalent thereof.

(iv) If the contractor does not make payments to a trustee or other third person, the contractor may consider as part of the wages of any laborer or mechanic the amount of any costs reasonably anticipated in providing bona fide fringe benefits under a plan or program, *Provided*, That the Secretary of Labor has found, upon the written request of the contractor, that the applicable standards of the Davis-Bacon Act have been met. The Secretary of Labor may require the contractor to set aside in a separate account assets for the meeting of obligations under the plan or program.

(2) Withholding. The (write in name of Federal Agency or the loan or grant recipient) shall upon its own action or upon written request of an authorized representative of the Department of Labor withhold or cause to be withheld from the contractor under this contract or any other Federal contract with the same prime contractor, or any other federally-assisted contract subject to Davis-Bacon prevailing wage requirements, which is held by the same prime contractor, so much of the accrued payments or advances as may be considered necessary to pay laborers and mechanics, including apprentices, trainees, and helpers, employed by the contractor or any subcontractor the full amount of wages required by the contract. In the event of failure to pay any laborer or mechanic, including any apprentice, trainee, or helper, employed or working on the site of the work (or under the United States Housing Act of 1937 or under the Housing Act of 1949 in the construction or development of the project), all or part of the wages required by the contract,

the (Agency) may, after written notice to the contractor, sponsor, applicant, or owner, take such action as may be necessary to cause the suspension of any further payment, advance, or guarantee of funds until such violations have ceased.

(3) Payrolls and basic records.

(i) Payrolls and basic records relating thereto shall be maintained by the contractor during the course of the work and preserved for a period of three years thereafter for all laborers and mechanics working at the site of the work (or under the United States Housing Act of 1937, or under the Housing Act of 1949, in the construction or development of the project). Such records shall contain the name, address, and social security number of each such worker, his or her correct classification, hourly rates of wages paid (including rates of contributions or costs anticipated for bona fide fringe benefits or cash equivalents thereof of the types described in section 1(b)(2)(B) of the Davis-Bacon Act), daily and weekly number of hours worked, deductions made and actual wages paid. Whenever the Secretary of Labor has found under 29 CFR 5.5(a)(1)(iv) that the wages of any laborer or mechanic include the amount of any costs reasonably anticipated in providing benefits under a plan or program described in section 1(b)(2)(B) of the Davis-Bacon Act, the contractor shall maintain records which show that the commitment to provide such benefits is enforceable, that the plan or program is financially responsible, and that the plan or program has been communicated in writing to the laborers or mechanics affected, and records which show the costs anticipated or the actual cost incurred in providing such benefits. Contractors employing apprentices or trainees under approved programs shall maintain written evidence of the registration of apprenticeship programs and certification of trainee programs, the registration of the apprentices and trainees, and the ratios and wage rates prescribed in the applicable programs.

(ii)(A) The contractor shall submit weekly for each week in which any contract work is performed a copy of all payrolls to the (write in name of appropriate federal agency) if the agency is a party to the contract, but if the agency is not such a party, the contractor will submit the payrolls to the applicant, sponsor, or owner, as the case may be, for transmission to the (write in name of agency). The payrolls submitted shall set out accurately and completely all of the information required to be maintained under 29 CFR 5.5(a)(3)(i), except that full social security numbers and home addresses shall not be included on weekly transmittals. Instead the payrolls shall only need to include an individually identifying number for each employee (e.g., the last four digits of the employee's social security number). The required weekly payroll information may be submitted in any form desired. Optional Form WH-347 is available for this purpose from the Wage and Hour Division Web site at http://www.dol.gov/esa/whd/forms/wh347instr.htm or its successor site. The prime contractor is responsible for the submission of copies of payrolls by all subcontractors. Contractors and subcontractors shall maintain the full social security number and current address of each covered worker, and shall provide them upon request to the (write in name of appropriate federal agency) if the agency is a party to the contract, but if the agency is not such a party, the contractor will submit them to the applicant, sponsor, or owner, as the case may be, for transmission to the (write in name of agency), the contractor, or the Wage and Hour Division of the Department of Labor for purposes of an investigation or audit of compliance with prevailing wage requirements. It is not a violation of this section for a prime contractor to require a subcontractor to provide addresses and social security numbers to the prime contractor for its own records, without weekly submission to the sponsoring government agency (or the applicant, sponsor, or owner).

(B) Each payroll submitted shall be accompanied by a "Statement of Compliance," signed by the contractor or subcontractor or his or her agent who pays or supervises the payment of the persons employed under the contract and shall certify the following:

(1) That the payroll for the payroll period contains the information required to be provided under § 5.5 (a)(3)(ii) of Regulations, 29 CFR part 5, the appropriate information is being maintained under § 5.5 (a)(3)(i) of Regulations, 29 CFR part 5, and that such information is correct and complete;

(2) That each laborer or mechanic (including each helper, apprentice, and trainee) employed on the contract during the payroll period has been paid the full weekly wages earned, without rebate, either directly or indirectly, and that no deductions have been made either directly or indirectly from the full wages earned, other than permissible deductions as set forth in Regulations, 29 CFR part 3;

(3) That each laborer or mechanic has been paid not less than the applicable wage rates and fringe benefits or cash equivalents for the classification of work performed, as specified in the applicable wage determination incorporated into the contract.

(C) The weekly submission of a properly executed certification set forth on the reverse side of Optional Form WH-347 shall satisfy the requirement for submission of the "Statement of Compliance" required by paragraph (a)(3)(ii)(B) of this section.

(D) The falsification of any of the above certifications may subject the contractor or subcontractor to civil or criminal prosecution under section 1001 of title 18 and section 231 of title 31 of the United States Code.

(iii) The contractor or subcontractor shall make the records required under paragraph (a)(3)(i) of this section available for inspection, copying, or transcription by authorized representatives of the (write the name of the agency) or the Department of Labor, and shall permit such representatives to interview employees during working hours on the job. If the contractor or subcontractor fails to submit the required records or to make them available, the Federal agency may, after written notice to the contractor, sponsor, applicant, or owner, take such action as may be necessary to cause the suspension of any further payment, advance, or guarantee of funds. Furthermore, failure to submit the required records upon request or to make such records available may be grounds for debarment action pursuant to 29 CFR 5.12.

(4) Apprentices and trainees--

(i) Apprentices. Apprentices will be permitted to work at less than the predetermined rate for the work they performed when they are employed pursuant to and individually registered in a bona fide apprenticeship program registered with the U.S. Department of Labor, Employment and Training Administration, Office of Apprenticeship Training, Employer and Labor Services, or with a State Apprenticeship Agency recognized by the Office, or if a person is employed in his or her first 90 days of probationary employment as an apprentice in such an apprenticeship program, who is not individually registered in the program, but who has been certified by the Office of Apprenticeship Training, Employer and Labor Services or a State Apprenticeship Agency (where appropriate) to be eligible for probationary employment as an apprentice. The allowable ratio of apprentices to journeymen on the job site in any craft classification shall not be greater than the ratio permitted to the contractor as to the entire work force under the registered program. Any worker listed on a payroll at an apprentice wage rate, who is not registered or otherwise employed as stated above, shall be paid not less than the applicable wage rate on the wage determination for the classification of work actually performed. In addition, any apprentice performing work on the job site in excess of the ratio permitted under the registered program shall be paid not less than the applicable wage rate on the wage determination for the work actually performed. Where a contractor is performing construction on a project in a locality other than that in which its program is registered, the ratios and wage rates (expressed in percentages of the journeyman's hourly rate) specified in the contractor's or subcontractor's registered program shall be observed. Every apprentice must be paid at not less than the rate specified in the registered program for the apprentice's level of progress, expressed as a percentage of the journeymen hourly rate specified in the applicable wage determination. Apprentices shall be paid fringe benefits in accordance with the provisions of the apprenticeship program. If the apprenticeship program does not specify fringe benefits, apprentices must be paid the full amount of fringe benefits listed on the wage determination for the applicable classification. If the Administrator determines that a different practice prevails for the applicable apprentice classification, fringes shall be paid in accordance with that determination. In the event the Office of Apprenticeship Training, Employer and Labor Services, or a State Apprenticeship Agency

recognized by the Office, withdraws approval of an apprenticeship program, the contractor will no longer be permitted to utilize apprentices at less than the applicable predetermined rate for the work performed until an acceptable program is approved.

(ii) Trainees. Except as provided in 29 CFR 5.16, trainees will not be permitted to work at less than the predetermined rate for the work performed unless they are employed pursuant to and individually registered in a program which has received prior approval, evidenced by formal certification by the U.S. Department of Labor, Employment and Training Administration. The ratio of trainees to journeymen on the job site shall not be greater than permitted under the plan approved by the Employment and Training Administration. Every trainee must be paid at not less than the rate specified in the approved program for the trainee's level of progress, expressed as a percentage of the journeyman hourly rate specified in the applicable wage determination. Trainees shall be paid fringe benefits in accordance with the provisions of the trainee program. If the trainee program does not mention fringe benefits, trainees shall be paid the full amount of fringe benefits listed on the wage determination unless the Administrator of the Wage and Hour Division determines that there is an apprenticeship program associated with the corresponding journeyman wage rate on the wage determination which provides for less than full fringe benefits for apprentices. Any employee listed on the payroll at a trainee rate who is not registered and participating in a training plan approved by the Employment and Training Administration shall be paid not less than the applicable wage rate on the wage determination for the classification of work actually performed. In addition, any trainee performing work on the job site in excess of the ratio permitted under the registered program shall be paid not less than the applicable wage rate on the wage determination for the work actually performed. In the event the Employment and Training Administration withdraws approval of a training program, the contractor will no longer be permitted to utilize trainees at less than the applicable predetermined rate for the work performed until an acceptable program is approved.

(iii) Equal employment opportunity. The utilization of apprentices, trainees and journeymen under this part shall be in conformity with the equal employment opportunity requirements of Executive Order 11246, as amended, and 29 CFR part 30.

(5) Compliance with Copeland Act requirements. The contractor shall comply with the requirements of 29 CFR part 3, which are incorporated by reference in this contract.

(6) Subcontracts. The contractor or subcontractor shall insert in any subcontracts the clauses contained in 29 CFR 5.5(a)(1) through (10) and such other clauses as the (write in the name of the Federal agency) may by appropriate instructions require, and also a clause requiring the subcontractors to include these clauses in any lower tier subcontracts. The prime contractor shall be responsible for the compliance by any subcontractor or lower tier subcontractor with all the contract clauses in 29 CFR 5.5.

(7) Contract termination: debarment. A breach of the contract clauses in 29 CFR 5.5 may be grounds for termination of the contract, and for debarment as a contractor and a subcontractor as provided in 29 CFR 5.12.

(8) Compliance with Davis-Bacon and Related Act requirements. All rulings and interpretations of the Davis-Bacon and Related Acts contained in 29 CFR parts 1, 3, and 5 are herein incorporated by reference in this contract.

(9) Disputes concerning labor standards. Disputes arising out of the labor standards provisions of this contract shall not be subject to the general disputes clause of this contract. Such disputes shall be resolved in accordance with the procedures of the Department of Labor set forth in 29 CFR parts 5, 6, and 7. Disputes within the meaning of this clause include disputes between the contractor (or any of its subcontractors) and the contracting agency, the U.S. Department of Labor, or the employees or their representatives.

(10) Certification of eligibility.

(i) By entering into this contract, the contractor certifies that neither it (nor he or she) nor any person or firm who has an interest in the contractor's firm is a person or firm ineligible to be awarded Government contracts by virtue of section 3(a) of the Davis-Bacon Act or 29 CFR 5.12 (a)(1).

(ii) No part of this contract shall be subcontracted to any person or firm ineligible for award of a Government contract by virtue of section 3(a) of the Davis-Bacon Act or 29 CFR 5.12(a)(1).

(iii) The penalty for making false statements is prescribed in the U.S. Criminal Code, 18 U.S.C. 1001.

(b) Contract Work Hours and Safety Standards Act. The Agency Head shall cause or require the contracting officer to insert the following clauses set forth in paragraphs (b)(1), (2), (3), and (4) of this section in full in any contract in an amount in excess of $100,000 and subject to the overtime provisions of the Contract Work Hours and Safety Standards Act. These clauses shall be inserted in addition to the clauses required by § 5.5(a) or 4.6 of part 4 of this title. As used in this paragraph, the terms laborers and mechanics include watchmen and guards.

(1) Overtime requirements. No contractor or subcontractor contracting for any part of the contract work which may require or involve the employment of laborers or mechanics shall require or permit any such laborer or mechanic in any workweek in which he or she is employed on such work to work in excess of forty hours in such workweek unless such laborer or mechanic receives compensation at a rate not less than one and one-half times the basic rate of pay for all hours worked in excess of forty hours in such workweek.

(2) Violation; liability for unpaid wages; liquidated damages. In the event of any violation of the clause set forth in paragraph (b)(1) of this section the contractor and any subcontractor responsible therefor shall be liable for the unpaid wages. In addition, such contractor and subcontractor shall be liable to the United States (in the case of work done under contract for the District of Columbia or a territory, to such District or to such territory), for liquidated damages. Such liquidated damages shall be computed with respect to each individual laborer or mechanic, including watchmen and guards, employed in violation of the clause set forth in paragraph (b)(1) of this section, in the sum of $10 for each calendar day on which such individual was required or permitted to work in excess of the standard workweek of forty hours without payment of the overtime wages required by the clause set forth in paragraph (b)(1) of this section.

(3) Withholding for unpaid wages and liquidated damages. The (write in the name of the Federal agency or the loan or grant recipient) shall upon its own action or upon written request of an authorized representative of the Department of Labor withhold or cause to be withheld, from any moneys payable on account of work performed by the contractor or subcontractor under any such contract or any other Federal contract with the same prime contractor, or any other federally-assisted contract subject to the Contract Work Hours and Safety Standards Act, which is held by the same prime contractor, such sums as may be determined to be necessary to satisfy any liabilities of such contractor or subcontractor for unpaid wages and liquidated damages as provided in the clause set forth in paragraph (b)(2) of this section.

(4) Subcontracts. The contractor or subcontractor shall insert in any subcontracts the clauses set forth in paragraph (b)(1) through (4) of this section and also a clause requiring the subcontractors to include these clauses in any lower tier subcontracts. The prime contractor shall be responsible for compliance by any subcontractor or lower tier subcontractor with the clauses set forth in paragraphs (b)(1) through (4) of this section.

(c) In addition to the clauses contained in paragraph (b), in any contract subject only to the Contract Work Hours and Safety Standards Act and not to any of the other statutes cited in § 5.1, the Agency Head shall cause or require the contracting officer to insert a clause requiring that the contractor or subcontractor shall maintain payrolls and basic payroll records during the course of the work and shall preserve them for a period of three years from the completion of the contract for all laborers and mechanics, including guards and watchmen, working on the contract. Such records shall contain the

name and address of each such employee, social security number, correct classifications, hourly rates of wages paid, daily and weekly number of hours worked, deductions made, and actual wages paid. Further, the Agency Head shall cause or require the contracting officer to insert in any such contract a clause providing that the records to be maintained under this paragraph shall be made available by the contractor or subcontractor for inspection, copying, or transcription by authorized representatives of the (write the name of agency) and the Department of Labor, and the contractor or subcontractor will permit such representatives to interview employees during working hours on the job.

(The information collection, recordkeeping, and reporting requirements contained in the following paragraphs of this section were approved by the Office of Management and Budget:

Paragraph	OMB Control Number
(a)(1)(ii)(B)	1215-01
(a)(1)(ii)(C)	1215-01
(a)(1)(iv)	1215-01
(a)(3)(i)	1215-0140, 1215-00
(a)(3)(ii)(A)	1215-01
(c)	1215-0140, 1215-00

[29 FR 100, Jan. 4, 1964, as amended at 29 FR 13463, Sept. 30, 1964; 30 FR 13136, Oct. 15, 1965; 36 FR 19304, Oct. 2, 1971; 40 FR 30481, July 21, 1975; 41 FR 10063, March 9, 1976; 47 FR 145, Jan. 5, 1982; 51 FR 12265, April 9, 1986; 54 FR 4243, Jan. 27, 1989; 55 FR 50150, Dec. 4, 1990; 57 FR 28776, June 26, 1992; 58 FR 58955, Nov. 5, 1993; 61 FR 40716, Aug. 5, 1996; 61 FR 68641, Dec. 30, 1996; 65 FR 69693, Nov. 20, 2000; 73 FR 77511, Dec. 19, 2008; 74 FR 2862, Jan. 16, 2009]

SOURCE: 48 FR 19541, April 29, 1983; 51 FR 12265, April 9, 1986; 61 FR 40716, Aug. 5, 1996; 65 FR 80278, Dec. 20, 2000; 73 FR 77511, Dec. 19, 2008, unless otherwise noted.

AUTHORITY: 5 U.S.C. 301; R.S. 161, 64 Stat. 1267; Reorganization Plan No. 14 of 1950, 5 U.S.C. appendix; 40 U.S.C. 3141 et seq.; 40 U.S.C. 3145; 40 U.S.C. 3148; 40 U.S.C. 3701 et seq.; and the laws listed in 5.1(a) of this part; Secretary's Order 01-2008; and Employment Standards Order No. 2001-01.; 40 U.S.C. 276a-276a-7; 40 U.S.C. 276c; 40 U.S.C. 327-332; Reorganization Plan No. 14 of 1950, 5 U.S.C. Appendix; 5 U.S.C. 301; and the statutes listed in section 5.1(a) of this part.

NOTES OF DECISIONS

29 C. F. R. § 5.5, 29 CFR § 5.5

Current through December 15, 2011; 76 FR 77913.

© 2011 Thomson Reuters

END OF DOCUMENT

(c) 2011 Thomson Reuters. No Claim to Orig. US Gov. Works.

>

General Decision Number: NE120034 06/15/2012 NE34

Superseded General Decision Number: NE20100044

State: Nebraska

Construction Type: Highway

Counties: Lancaster, Saunders and Seward Counties in Nebraska.

HIGHWAY CONSTRUCTION PROJECTS

Modification Number	Publication Date
0	01/06/2012
1	03/16/2012
2	06/15/2012

* ELEC0022-018 06/04/2012

Saunders County - East of Highway 109 and North of Alternate Highway 30)

	Rates	Fringes
ELECTRICIAN	$ 31.00	13.71

ELEC0265-005 09/01/2011

REMAINDER OF SAUNDERS COUNTY

	Rates	Fringes
Electricians:		
Zone 1	$ 25.57	4.5%+8.75
Zone 2	$ 25.87	4.5%+8.75
Zone 3	$ 26.17	4.5%+8.75
Zone 4	$ 26.57	4.5%+8.75

ZONE DEFINITIONS [Mileage from main Post Office in Lincoln]
Zone 1: 0 to 35 miles
Zone 2: 36 to 50 miles
Zone 3: 51 to 75 miles
Zone 4: 76 miles and over

FOOTNOTE:
Work on scaffolds, hanging scaffolds, boatswains chairs or ladders, etc., in any area where the worker is in a position to fall 40 ft. or more, or where objects above the worker can fall 40 ft. or more: to be paid one and one-half times the straight- time rate of pay.

SUNE2011-023 08/29/2011

	Rates	Fringes
CARPENTER (Includes Form Work)	$ 18.51	

CEMENT MASON/CONCRETE FINISHER
Lancaster County.....$ 18.48 5.86
Seward, Saunders Counties...$ 18.17 5.86

ELECTRICIAN, Includes
Installation of Traffic
Signals
Lancaster, Seward Counties..$ 28.83

HIGHWAY/PARKING LOT STRIPING:
Laborer
Lancaster County.....$ 11.82
Saunders County.....$ 12.37
Seward County.....$ 11.27

IRONWORKER, REINFORCING.....$ 19.35

LABORER (COMMON OR GENERAL)
Lancaster County.....$ 12.58
Saunders County.....$ 12.55
Seward County.....$ 12.20

LABORER: Concrete Saw (Hand
Held/Walk Behind).....$ 16.07 6.55

LABORER: Mason Tender
(Cement/Concrete).....$ 10.44

LABORER: Traffic Control -
Flagger and Cone/Barrel Setter
Lancaster County.....$ 11.87
Seward County.....$ 9.00

Operating Engineers: (Skid
Loader)
Lancaster County.....$ 10.56
Saunders County.....$ 12.51
Seward County.....$ 14.85

OPERATOR: Asphalt Spreader.....$ 18.74

OPERATOR: Backhoe Loader
Combo.....$ 15.94

OPERATOR: Backhoe/Excavator
Lancaster County.....$ 19.91 6.07
Saunders County.....$ 19.47 6.07
Seward County.....$ 16.15

OPERATOR: Broom.....$ 11.43

OPERATOR: Bulldozer
Lancaster County.....$ 16.78
Seward, Saunders Counties...$ 16.34

OPERATOR: Compactor.....$ 13.36

OPERATOR: Concrete Saw
Lancaster, Seward Counties..$ 20.87

OPERATOR: Crane.....$ 22.38

OPERATOR: Hydrohammer.....$ 17.03

OPERATOR: Loader
Lancaster County.....$ 17.44
Saunders County.....$ 17.19
Seward County.....$ 16.04

OPERATOR: Mechanic.....$ 19.58

OPERATOR: Milling Machine.....$ 12.80

OPERATOR: Oiler.....$ 16.21

OPERATOR: Paver
Lancaster County.....$ 14.79
Seward, Saunders Counties...$ 16.13

OPERATOR: Roller
Lancaster County.....$ 13.00
Saunders County.....$ 13.45
Seward County.....$ 14.04

OPERATOR: Scraper
Lancaster County.....$ 14.80
Seward, Saunders Counties...$ 14.83

OPERATOR: Tractor
Lancaster County.....$ 9.50
Seward, Saunders Counties...$ 10.65

OPERATOR: Grader/Blade
Lancaster County.....$ 16.09
Seward, Saunders Counties...$ 16.04

TRUCK DRIVER, Includes Dump
and Tandem Truck
Lancaster County.....$ 14.51
Saunders County.....$ 14.47
Seward County.....$ 14.16

TRUCK DRIVER: Lowboy Truck.....$ 15.93

TRUCK DRIVER: Semi-Trailer
Truck
Lancaster County.....$ 13.48
Seward, Saunders Counties...$ 14.09

TRUCK DRIVER: Water Truck.....$ 18.00 6.40

WELDERS - Receive rate prescribed for craft performing
operation to which welding is incidental.

==========

Unlisted classifications needed for work not included within

the scope of the classifications listed may be added after award only as provided in the labor standards contract clauses (29CFR 5.5 (a) (1) (ii)).

The body of each wage determination lists the classification and wage rates that have been found to be prevailing for the cited type(s) of construction in the area covered by the wage determination. The classifications are listed in alphabetical order of "identifiers" that indicate whether the particular rate is union or non-union.

Union Identifiers

An identifier enclosed in dotted lines beginning with characters other than "SU" denotes that the union classification and rate have found to be prevailing for that classification. Example: PLUM0198-005 07/01/2011. The first four letters , PLUM, indicate the international union and the four-digit number, 0198, that follows indicates the local union number or district council number where applicable , i.e., Plumbers Local 0198. The next number, 005 in the example, is an internal number used in processing the wage determination. The date, 07/01/2011, following these characters is the effective date of the most current negotiated rate/collective bargaining agreement which would be July 1, 2011 in the above example.

Union prevailing wage rates will be updated to reflect any changes in the collective bargaining agreements governing the rate.

Non-Union Identifiers

Classifications listed under an "SU" identifier were derived from survey data by computing average rates and are not union rates; however, the data used in computing these rates may include both union and non-union data. Example: SULA2004-007 5/13/2010. SU indicates the rates are not union rates, LA indicates the State of Louisiana; 2004 is the year of the survey; and 007 is an internal number used in producing the wage determination. A 1993 or later date, 5/13/2010, indicates the classifications and rates under that identifier were issued as a General Wage Determination on that date.

Survey wage rates will remain in effect and will not change until a new survey is conducted.

WAGE DETERMINATION APPEALS PROCESS

1.) Has there been an initial decision in the matter? This can be:

* an existing published wage determination

* a survey underlying a wage determination
* a Wage and Hour Division letter setting forth a position on a wage determination matter
* a conformance (additional classification and rate) ruling

On survey related matters, initial contact, including requests for summaries of surveys, should be with the Wage and Hour Regional Office for the area in which the survey was conducted because those Regional Offices have responsibility for the Davis-Bacon survey program. If the response from this initial contact is not satisfactory, then the process described in 2.) and 3.) should be followed.

With regard to any other matter not yet ripe for the formal process described here, initial contact should be with the Branch of Construction Wage Determinations. Write to:

Branch of Construction Wage Determinations
Wage and Hour Division
U.S. Department of Labor
200 Constitution Avenue, N.W.
Washington, DC 20210

2.) If the answer to the question in 1.) is yes, then an interested party (those affected by the action) can request review and reconsideration from the Wage and Hour Administrator (See 29 CFR Part 1.8 and 29 CFR Part 7). Write to:

Wage and Hour Administrator
U.S. Department of Labor
200 Constitution Avenue, N.W.
Washington, DC 20210

The request should be accompanied by a full statement of the interested party's position and by any information (wage payment data, project description, area practice material, etc.) that the requestor considers relevant to the issue.

3.) If the decision of the Administrator is not favorable, an interested party may appeal directly to the Administrative Review Board (formerly the Wage Appeals Board). Write to:

Administrative Review Board
U.S. Department of Labor
200 Constitution Avenue, N.W.
Washington, DC 20210

4.) All decisions by the Administrative Review Board are final.

==========

END OF GENERAL DECISION

Certified Statement Pursuant to Neb. Rev. Stat. § 77-1323

§ 77-1323 Every person, partnership, limited liability company, association, or corporation furnishing labor or material in the repair, alteration, improvement, erection, or construction of any public improvement shall furnish a certified statement to be attached to the contract that all equipment to be used on the project, except that acquired since the assessment date, has been assessed for taxation for the current year, giving the county where assessed.

Pursuant to Neb. Rev. Stat. § 77-1323, I, _____, do hereby certify that all equipment to be used on JPA Project/Bid No. _____, except that equipment acquired since the assessment date, has been assessed for taxation for the current year, in Lancaster County, Nebraska.

DATED this ____ day of _____, 20___.

By: _____

Title:_____

STATE OF NEBRASKA)
) ss.
COUNTY OF _____)

On _____, 20___, before me, the undersigned Notary Public duly commissioned for and qualified in said County, personally came _____, to me known to be the identical person, whose name is affixed to the foregoing instrument and acknowledged the execution thereof to be his voluntary act and deed.

Witness my hand and notarial seal the day and year last above written.

_____
Notary Public

(S E A L)

Contractor Certification of Compliance
NPDES Dewatering Discharge Permit No. NEG671000

In accordance with the provisions of the Federal Water Pollution Control Act (33 U.S.C. § 1251 *et. seq.*, as amended), the Nebraska Environmental Protection Act (Neb. Rev. Stat. § 81-1501 *et. seq.*, as amended), and the Rules and Regulations promulgated thereunder, the West Haymarket Joint Public Agency (JPA) has submitted a site-wide Dewatering Notice of Intent (DW-NOI) for dewatering discharges authorization under the General NPDES Permit NEG671000, attached as Exhibit A and incorporated as if fully set forth herein, for the West Haymarket Redevelopment Site. The JPA is designated as an "Owner" and the Contractor, including any selected subcontractor conducting the dewatering activities, is designated as an "Operator" of the dewatering activity conducted under the permit.

As such, I certify that:

I, or qualified members of my staff, have reviewed and understand the terms and conditions of the NPDES General Permit Number NEG671000 and I understand that the submission of this "Contractor Certification of Compliance" obligates the Contractor as the operator responsible for conducting dewatering activities, to comply with all said terms and conditions of the permit.

_____ _____
Operator's Signature Date

_____
Title

_____
Company

_____
Business Address

WH 12-69 Introduce: 12-18-12

RESOLUTION NO. WH- _____

BE IT RESOLVED by the Board of Representatives of the West Haymarket Joint Public Agency:

That the Contract Agreement between the West Haymarket Joint Public Agency and Nebraska Nursery & Color Garden, pursuant to Bid No. 12-296, for installation of the West Haymarket Parking Lot, Festival Space and Pedestrian Bridge landscaping for the sum of $323,540.32 is hereby approved and the Chairperson of the West Haymarket Joint Public Agency Board of Representatives is hereby authorized to execute said Contract Agreement on behalf of the West Haymarket Joint Public Agency.

The City Clerk is directed to return one fully executed original Contract Agreement and a copy of this Resolution to Rick Peo, Chief Assistant City Attorney, for transmittal to Nebraska Nursery & Color Garden.

Adopted this _____ day of _____, 2012.

Introduced by:

_____

Approved as to Form & Legality:

West Haymarket Joint Public Agency
Board of Representatives

_____
Legal Counsel for
West Haymarket Joint Public Agency

_____
Chris Beutler, Chair

_____
Tim Clare

_____
Eugene Carroll

WEST HAYMARKET JOINT PUBLIC AGENCY (JPA)
BID NO. 12-296

C O N T R A C T A G R E E M E N T

THIS JPA CONTRACT AGREEMENT ("Contract") is made and entered into as of the _____ day of _____, 2012, by and between **NEBRASKA NURSERY AND COLOR GARDENS, L.L.C.,** hereinafter called Contractor, and the **WEST HAYMARKET JOINT PUBLIC AGENCY**, hereinafter called JPA.

RECITALS

WHEREAS, JPA has caused to be prepared, in accordance with law, Specifications, Plans, and other Contract Documents for the Work herein described, and has approved and adopted said documents and has caused to be published a Notice to Bidders advertisement for and in connection with said Work, to wit:

West Haymarket Improvements –
Parking Lot, Festival Space and Pedestrian Bridge Landscape Planting Project
Bid No. 12-296

WHEREAS, the Contractor, in response to such advertisement, has submitted to the JPA, in the manner and at the time specified, a sealed Bid in accordance with the terms of said advertisement.

WHEREAS, JPA, in the manner prescribed by law, has publicly advertised, opened, examined, and canvassed the Bids submitted in response to such advertisement, and as a result of such canvass has determined and declared the Contractor to be the lowest and best bidder for the said Work for the sum of Three Hundred Twenty Three Five Hundred Forty Thousand and 32/100ths Dollars ($323,540.32). Copies of the Bid Opportunity Detail, Notice to Bidders, the Instructions to Bidders, Addendum Nos. 1 and 2, Supplier's Response and the Contractor's Bid Proposal (collectively "Bid Documents") are attached hereto as Exhibit A.

WHEREAS, since the Work will be carried out within 50 feet of BNSF Property pursuant to a Temporary License/Right-of-Entry ("ROE"), the terms and conditions of the ROE and the Construction and Maintenance Agreement ("C&M Agreement") between BNSF and the City of Lincoln as assigned to the JPA ("C&M Agreement") are applicable to the performance of the Work and Contractor must comply with the applicable provisions of the C&M Agreement concerning work within 50 feet of BNSF Property including, but not limited to the BNSF Insurance Requirements. The C&M Agreement is attached hereto as Exhibit C.

WHEREAS, Contractor understands and acknowledges that American Recovery and Reinvestment Act (ARRA) tax-favored bonds will fund all or a portion of the Work and therefore this Contract is subject to the Davis-Bacon Act; and that the Contractor is required to comply with the Contract clauses in 29 C.F.R. §5.5(a) which are made part of this Contract.

WHEREAS, Contractor understands and acknowledges that since future use of the site will be for a surface parking lot, the Contractor is required to pay Davis-Bacon Act prevailing wages in accordance with Highway Construction General Wage Decision NE120034 dated 06/15/2012 ("NE34 Wage Decision").

WHEREAS, the NE34 Wage Decision is hereinafter referred to as the "Effective Wage Decision."

WHEREAS, the use of the term “City of Lincoln” in the C&M Agreement shall be deemed to refer to the JPA.

WHEREAS, the use of the term “Contracting Officer” in 29 C.F.R. parts 1, 3 and 5 shall be deemed to refer to the JPA.

WHEREAS, Contractor possesses certain skills, experience, education and competency to perform the Work on behalf of the JPA and the JPA desires to engage Contractor for such services on the terms and conditions provided herein.

WHEREAS, Contractor is willing and able to perform the Work in accordance with this Contract.

NOW, THEREFORE, in consideration of the mutual covenants and agreements of the Parties contained herein and incorporating all of the above Recitals into this Contract as if fully set forth herein, the Contractor and JPA have agreed and hereby agree as follows:

PERFORMANCE OF WORK - The Contractor agrees to (a) furnish all tools, equipment, supplies, superintendence, transportation, and other construction accessories, services, and facilities; (b) furnish all materials, supplies, and equipment specified to be incorporated into and form a permanent part of the complete Work; (c) provide and perform all necessary labor in a substantial and workmanlike manner and in accordance with the provisions of the Contract Documents; and (d) execute, construct, and complete all Work included in and covered by JPA’s official award of this Contract to the Contractor, such award being based on the acceptance by JPA of the Contractor’s Bid as set forth in Exhibit A.

CHANGE IN SCOPE OF SERVICES. If an additive or subtractive change in scope is encountered on the site or requested by the JPA, a detailed Proposed Change Order request is to be provided by the Contractor. This must include a breakout of the estimated labor, materials, tools, and equipment required to complete the actual work. The maximum markup for all other items not associated with the work shall be ten percent (10%). This is to include all onsite and

offsite overhead, all general conditions, profit, and any other costs not associated with the actual performance of the work.

BNSF CONTRACT REQUIREMENTS. Contractor agrees that the provisions in the C&M Agreement are made part of this Contract. Contractor agrees that if the Work will be performed within 50 feet of BNSF Property, Contractor will comply with the Contractor Requirements attached as Exhibit C to the C&M Agreement), including execution of a Contractor Right of Entry in the form of Exhibit C-1(A) attached to the C&M Agreement. Contractor understands and agrees that prior to commencing the Work, the Contractor must:

(a) Obtain all required insurance, evidenced by certificates of insurance as required by the JPA, City Legal, BNSF, and any other required insurance.

(b) Submit the signed C-1A agreement and all required insurance certificates to BNSF@certfocus.com and to PC Sports.

(c) Submit copies of signed C-1A agreement and all required insurance certificates to Michael Schaefer (BNSF):

Michael Schaefer
Michael.Schaefer2@BNSF.com
402-458-7379 (office)
402-304-1437 (cell)
402-458-7457 (fax)

(d) Receive the BNSF executed C-1A agreement from Michael Schaefer.

Contractor further agrees that should it be necessary to enter upon the BNSF Property to perform the Work, Contractor must prior to such entry:

(a) Complete the BNSF Contractor Safety Orientation at www.contractororientation.com. All personnel who will be on site must take the safety training program and keep the issued ID card on their person at all times while on site. This includes employees of subcontractors employed by the Contractor.

(b) Complete the e-RAILSAFE security orientation training program at www.erailsafe.com. All personnel who will be on site must take the security training program and keep the issued ID card on their person at all times while on site. This includes employees of subcontractors employed by the Contractor.

(c) Send confirmation of the completion of the Contractor's Safety Orientation and e-RAILSAFE security orientation programs to the City Representative (PC Sports) and to Michael Schaefer, along with a list of all personnel who have taken both programs. This includes employees of subcontractors employed by the Contractor.

(d) Assume and comply with the terms and conditions of any right-of-entry agreement, license and/or easement between BNSF and the JPA governing access to such BNSF Property.

COMPENSATION - JPA agrees to pay to the Contractor for the performance of the Work embraced in this Contract, and the Contractor agrees to accept as full compensation therefore, the sums and prices for all Work covered by and included in the Contractor's Bid awarded by the JPA to the Contractor award, payment thereof to be made in the manner provided in Article VIII of the City of Lincoln Standard Specifications for Municipal Construction (2011 Edition).

COMPLETION DATE - The Contractor agrees that the Work in this Contract shall begin as soon after the Notice to Proceed as is necessary for the Contractor to complete the Work within the number of calendar days allowed and prior to the stated completion date.

INDEMNIFICATION - The following Indemnification provisions are in addition to and not in lieu of the Assumption of Liability and Indemnification provision in Article VI.B. of the City of Lincoln Standard Specifications for Municipal Construction (2011 Edition).

A. INDEMNIFICATION OF JPA. Contractor agrees to defend, indemnify and hold harmless JPA to the same extent and under the same terms and conditions as required by the Indemnification of JPA in the Indemnification and Insurance Requirements for All West Haymarket Joint Public Agency Contracts included as part of the Other Attached Contract Documents attached hereto as Exhibit D.

B. INDEMNIFICATION OF BNSF. Contractor understands and acknowledges that the JPA under the C&M Agreement is required to require the Contractor to release, defend and indemnify BNSF to the same extent and under the same terms and conditions as the JPA is required to release, defend and indemnify BNSF. Therefore, Contractor agrees to defend, release, indemnify and hold harmless BNSF to the same extent and under the same terms and conditions as the JPA is required to release, defend and indemnify BNSF in the C&M Agreement and as required in the Contractor's Right of Entry.

INSURANCE – The following insurance requirements are in lieu of the Insurance Requirements for all City Contracts found in Article X.B. of the City of Lincoln Standard Specifications for Municipal Construction (2011 Edition).

A. JPA Insurance Requirements. Contractor shall at all times during the term of this Agreement purchase and maintain in place insurance coverage as required by the Insurance Requirements for All West Haymarket Joint Public Agency Contracts included as part of the Other Attached Contract Documents attached hereto as Exhibit D.

B. BNSF Insurance Requirements. Contractor shall at all times during the term of this Contract purchase and maintain in place insurance coverage as required by the Insurance requirements of BNSF found in the C&M Agreement (Exhibit C).

Contractor agrees to provide all types of insurance required by either the JPA or BNSF. Contractor will furnish coverages against any and all perils required by either the JPA or

BNSF. In the event there is a difference between the JPA and BNSF coverage limits, Contractor will provide the larger amount satisfying both JPA and BNSF requirements.

DAVIS-BACON ACT – Contractor agrees to comply with the Davis-Bacon Act. Contractor further agrees to comply with contract clauses set forth in 29 C.F.R. §5.5(a) included as part of the Other Attached Contract Documents (Exhibit D) which provide in part that Contractor shall:

- On a weekly basis pay all laborers and mechanics not less than the federal prevailing wages listed in the wage determinations included in the contract;
- Submit weekly certified payroll records to the JPA; and
- Post the applicable Davis-Bacon wage determinations with the Davis Bacon poster (WH-1321) on the job site in a prominent and accessible place where they can be easily seen by the Contractor's workers.

Contractor further agrees to pay the prevailing wages set forth in the Effective Wage Decision. Said Effective Wage Decision is included in the Other Attached Contract Documents (Exhibit D). Contractor agrees to attach the Effective Wage Decision and include and/or incorporate the 29 C.F.R. §5.5(a) contract clauses in any subcontract in connection with the Work. Contractor shall also include a clause in any subcontract that the subcontractor shall attach the Effective Wage Decision and include and/or incorporate the 29 C.F.R. §5.5(a) contract clauses in any lower tier subcontract. Contractor shall be responsible for the compliance by any subcontractor or lower tier subcontractor with all the contract clauses in 29 C.F.R. §5.5(a) and payment of prevailing wages in accordance with the Effective Wage Decision.

NEB. REV. STAT. § 77-1323 CERTIFIED STATEMENT – Contractor, pursuant to the requirements of Neb. Rev. Stat. § 77-1323, has executed the Certified Statement attached hereto as part of Exhibit D certifying that all equipment to be used in performance of the Work, except that acquired since the assessment date has been assessed for the current year. Contractor understands and acknowledges that under Neb. Rev. Stat. §77-1324, any person, partnership, limited liability company, association, or corporation falsifying any statement required by Neb. Rev. Stat. § 77-1323 shall be guilty of a Class IV misdemeanor.

CONTRACT DOCUMENTS - The Contract Documents comprise the Contract, and consist of the following, whether or not attached hereto:

1. Bid Documents (Exhibit A).
2. Exhibit B – Intentionally Omitted.
3. Construction and Maintenance Agreement (Exhibit C).
4. Other Attached Contract Documents (Exhibit D).
   a. Commentary to Accompany Construction Bonds.
   b. Construction Performance Bond.
   c. Construction Payment Bond.
   d. Indemnification and Insurance Requirements for all West Haymarket Joint Public Agency Contracts (approved March 2012).
   e. Executive Order No 83319.
   f. 29 C.F.R. § 5.5(a) Contract Provisions.

g. Effective Wage Decision.
h. Certified Statement Pursuant to Neb. Rev. Stat. § 77-1323.
i. Special Provisions. Project No. 870201B.

5. Other Non-Attached Contract Documents.
   a. City of Lincoln Standard Specifications for Municipal Construction (2011 Edition). References to City in the Standard Specifications shall mean JPA, references to City Project Manager shall mean PC Sports. Notwithstanding any provisions to the contrary in the Standard Specifications, Change Orders shall be approved in accordance with the JPA's Change Order Process adopted by JPA Resolution No. WH00195.
   b. Lincoln Standard Plans 2010.
   c. ROE.
   d. Plan/Drawings and Geotechnical Report.
   e. Sales Tax Exempt Forms (to be provided upon award of the Special Purchase).
      i. Form of Nebraska Resale or Exempt Sales Certificate.
      ii. Form of Purchasing Agent Appointment.
      Note: Any portion of this project used for providing water service, such as pipe for water mains, are not tax exempt and are subject to sales and use tax.
      Note: The remainder of this project, including items exclusively used for providing fire protection, such as fire hydrants, is exempt from sales and use tax.
   f. Requirements in 29 C.F.R. parts 1, 3 and 5.
   g. Any other Bid Documents and/or Bid Attachments listed in the Bid Opportunity Detail not attached as part of Exhibit A or listed in the above list of other Non-Attached Contract Documents.

This Contract, together with the other Contract Documents herein above mentioned, form this Contract and they are as fully a part of the Contract as if hereto attached or herein repeated.

The Contractor and JPA hereby agree that all the terms and conditions of this Contract shall, by these presents, be binding upon themselves, and their heirs, administrators, executors, legal and personal representatives, successors, and assigns.

IN WITNESS WHEREOF, the Contractor and JPA do hereby execute this Contract.

CONTRACTOR: **NEBRASKA NURSERY AND COLOR GARDENS, L.L.C.**

By: _____
Title: _____

JPA: **WEST HAYMARKET JOINT PUBLIC AGENCY**

By: _____
_____, Chairperson of the West Haymarket Joint Public Agency Board of Representatives

EXHIBIT A

Bid Documents

Approved by Law
12-6-12

CITY OF LINCOLN NEBRASKA

LANCASTER COUNTY NEBRASKA

Return to Login • Supplier Registration

Bid Opportunity Detail

Bid Number	12-296 Addendum 2 (Haymarket Infrastructure Improvements - Parking Lot, Festival Space & Pedestrian Bridge Landscape Planting, Project No. 870201B (PW/U - Eng. Services))
Close Date & Time	12/5/2012 12:00:00 PM Central
Bid Duration	26 days 49 minutes 8 seconds

Bid Information

Bid Type	Bid
Issue Date & Time	11/9/2012 11:10:51 AM Central
Close Date & Time	12/5/2012 12:00:00 PM Central
Bid Status	Unsealed
Bid Notes	If you need assistance in preparing your bid, 1) Click the "Help" button in the upper right hand corner of any screen; 2) Contact our office at 402-441-7417 to set up a training session in Purchasing or assistance over the phone.

Contact Information

Contact Name	Vince M. Mejer
Address	Purchasing\City & County 440 S. 8th St. Lincoln, NE 68508 USA
Contact Phone	(402) 441-8314
Contact Fax	(402) 441-6513
Contact Email	vmejer@lincoln.ne.gov

Award Attachments

Location	File Name	Description
Header	Bid Tabs .pdf (161KB)	ITEMIZED PRICING

Bid Documents

Document	Format	Description
Invitation Document	Adobe (PDF)	PDF Invitation to Bid
Bid Tabulation by Supplier Spreadsheet	Spreadsheet (XLS)	Bid Tabulation by Supplier Spreadsheet
Bid Tabulation by Line Item Spreadsheet	Spreadsheet (XLS)	Bid Tabulation by Line Item Spreadsheet

Bid Attachments

Location	File Name	Description
Header	12-296 adv.pdf (12KB)	Notice To Bidders
Header	Instructions to Bidders, JPA - B 09-19-11.pdf (26KB)	Instructions to Bidders
Header	INS,_Bond_and_29_CFR[1].pdf (1.76MB)	Insurance, Sample Bond and 29 CFR
Header	12-296_DB_Rates.pdf (17KB)	Davis-Bacon Rates
Header	Empl_Class_Act_EO.pdf (288KB)	Employee Classification Act, Executive Order 83319
Header	Empl_Class_Act_Aff.pdf (52KB)	Employee Classification Act Affidavit
Header	870201B - Special Provisions.pdf (183KB)	Special Provisions
Header	FTP site.pdf (327KB)	Plans/Drawings and Geotechnical Report
Header	12-296 Adn1.pdf (9KB)	Addendum No. 1
Header	12-296_cont.pdf (78KB)	Sample contract (per Addendum No. 1)
Header	ADDENDUM NO 2 .pdf (10KB)	Addendum No. 2
Line 2	12-296 Bid Proposal.XLS (206KB)	Itemized Pricing

Event Activities

Activity Date	Title	Description
11/20/2012 1:30:00 PM CST	Pre-Bid	A Pre-bid meeting will be held Tuesday, November 20, 2012 at 1:30 p.m., at Clark Enerson Partners, 1010 Lincoln Mall, Lincoln, NE. All interested Vendors are

EXHIBIT A TO CONTRACT AGREEMENT

		strongly encouraged to attend.
12/5/2012 12:00:00 PM CST	General Contractors - Call 402-441-7417 or e-mail purchasing@lincoln.ne.gov to be added to this list.	Suppliers who will bid as a general contractor on this bid.
12/5/2012 12:00:00 PM CST	Sub-Contractors - Call 402-441-7417 or e-mail purchasing@lincoln.ne.gov to be added to this list.	Suppliers who will bid as a sub-contractor.

EXHIBIT A TO CONTRACT AGREEMENT

Advertise 1 time
Friday, November 9, 2012

City of Lincoln/Lancaster County
Purchasing Division
NOTICE TO BIDDERS

Sealed bids will be received by the Purchasing Agent of the City of Lincoln/Lancaster County, Nebraska **BY ELECTRONIC BID PROCESS** until: **12:00 pm, Wednesday, December 5, 2012** for providing the following:

Haymarket Parking Lot Landscaping Project 870201b, Bid No. 12-296

A Pre-bid meeting will be held Tuesday, November 20, 2012 at 1:30 p.m., at Clark Enerson Partners, 1010 Lincoln Mall, Lincoln, NE. All interested Vendors are strongly encouraged to attend.

Bidders must be registered on the City/County's E-Bid site in order to respond to the above Bid. To Register go to: lincoln.ne.gov (type: e-bid - in search box, then click "Supplier Registration")

Upon e-mail notification of registration approval, you may go to the E-Bid site to respond to this bid. Questions concerning this bid process may be directed to City/County Purchasing at (402) 441-8314 or (402) 441-7410 or *vmejer@lincoln.ne.gov*

EXHIBIT A TO CONTRACT AGREEMENT

INSTRUCTIONS TO BIDDERS
WEST HAYMARKET JOINT PUBLIC AGENCY
E-Bid

1. BIDDING PROCEDURE

1.1 Sealed bid, formal and informal, subject to Instructions and General Conditions and any special conditions set forth herein, will be received in the office of the Purchasing Division, 440 So. 8th St., Lincoln, NE 68508, until the bid closing date and time indicated for furnishing the West Haymarket Joint Public Agency, hereinafter referred to as "JPA", the materials, supplies, equipment or services shown in the electronic bid request.

1.2 Bidders shall use the electronic bid system for submitting bids and must complete all required fields.

1.3 Identify the item you will furnish by brand or manufacturer's name and catalog numbers. Also furnish specifications and descriptive literature if not bidding the specific manufacturer or model as listed in the specifications.

1.4 Any person submitting a bid for a firm, corporation, or other organization must show evidence of his authority so to bind such firm, corporation, or organization.

1.5 Bids received after the time and date established for receiving bids will be rejected.

1.6 The Bidders and public are invited, but not required, to attend the formal opening of bids. At the opening, prices will be displayed electronically and/or read aloud to the public. The pricing is also available for immediate viewing on-line. No decisions related to an award of a contract or purchase order will be made at the opening.

1.7 If bidding on a construction contract, the City's Standard Specifications for Municipal Construction 2011 shall apply.

1.7.1 Bidders may obtain this document from the City's Design Engineering Division of the Public Works & Utilities Department for a small fee.

1.7.2 Said document can be reviewed at Design Engineering or at the office of the Purchasing Division.

1.7.3 Said document is available on the web site. http://www.lincoln.ne.gov/city/pworks/engine/dconst/standard/stndspec/index.htm

2. BID SECURITY

2.1 Bid security, as a guarantee of good faith, in the form of a certified check, cashier's check, or bid bond, may be required to be submitted with this bidding document, as indicated on the bid.

2.1.1 Bid security, if required, shall be in the amount specified on the bid. The bid security must be scanned and attached to the "Response Attachments" section of your response or it can be faxed to the Purchasing Division at 402-441-6513. The original bid security should then be sent or delivered to the office of the Purchasing Division, 440 S. 8th St., Ste. 200, Lincoln, NE 68508 within three (3) days of bid closing.

2.1.2 If bid security is not received in the office of the Purchasing Division as stated above, the vendor may be determined to be non-responsive.

2.2 If alternates are submitted, only one bid security will be required, provided the bid security is based on the amount of the highest gross bid.

2.3 Such bid security will be returned to the unsuccessful Bidders when the award of bid is made.

2.4 Bid security will be returned to the successful Bidder(s) as follows:

2.4.1 For single order bids with specified quantities: upon the delivery of all equipment or merchandise, and upon final acceptance by JPA.

2.4.2 For all other contracts: upon approval by JPA of the executed contract and bonds.

2.5 JPA shall have the right to retain the bid security of Bidders to whom an award is being considered until either:

2.5.1 A contract has been executed and bonds have been furnished.

2.5.2 The specified time has elapsed so that the bids may be withdrawn.

2.5.3 All bids have been rejected.

2.6 Bid security will be forfeited to JPA as full liquidated damages, but not as a penalty, for any of the following reasons, as pertains to this bidding document:

2.6.1 If the Bidder fails or refuses to enter into a contract on forms provided JPA, and/or if the Bidder fails to provide sufficient bonds or insurance within the time period as established in this bidding document.

3. BIDDER'S REPRESENTATION

3.1 Each Bidder by electronic signature and submitting a bid, represents that the Bidder has read and understands the bidding documents, and the bid has been made in accordance therewith.

3.2 Each Bidder for services further represents that the Bidder has examined and is familiar with the local conditions under which the work is to be done and has correlated the observations with the requirements of the bidding documents.

4. CLARIFICATION OF BIDDING DOCUMENTS

4.1 Bidders shall promptly notify the Purchasing Agent of any ambiguity, inconsistency or error which they may discover upon examination of the bidding documents.

4.2 Bidders desiring clarification or interpretation of the bidding documents for formal bids shall make a written request which must reach the Purchasing Agent at least five (5) calendar days prior to the date and time for receipt of formal bids.

4.3 Changes made to the bidding documents will be issued electronically. All vendors registered for that bid will be notified of the addendum. Subsequent Bidders will only receive the bid with the addendum included.

4.4 Oral interpretations or changes to the bidding documents made in any manner other than written form will not be binding on JPA; and Bidders shall not rely upon such interpretations or changes.

5. ADDENDA

5.1 Addenda are instruments issued by JPA prior to the date for receipt of bids which modify or interpret the bidding document by addition, deletion, clarification or correction.

5.2 Addenda notification will be made available to all registered vendors immediately via e-mail for inspection on-line.

5.3 No formal addendums will be issued later than forty-eight (48) hours prior to the date and time for receipt of formal bids, except an addendum withdrawing the invitation to bid, or an addendum which includes postponement of the bid.

6. INDEPENDENT PRICE DETERMINATION

6.1 By signing and submitting this bid, the Bidder certifies that the prices in this bid have been arrived at independently, without consultation, communication or agreement, for the purpose of restricting competition, as to any matter relating to such prices with any other Bidder or with any competitor; unless otherwise required by law, the prices which have been quoted in this bid have not been knowingly disclosed by the Bidder prior to bid opening directly or indirectly to any other Bidder or to any competitor; no attempt has been made, or will be made, by the Bidder to induce any person or firm to submit, or not to submit, a bid for the purpose of restricting competition.

7. ANTI-LOBBYING PROVISION

7.1 During the period between the bid advertisement date and the contract award, Bidders, including their agents and representatives, shall not lobby or promote their bid with the Mayor, any member of the City Council, or JPA Board and staff except in the course of JPA sponsored inquiries, briefings, interviews, or presentations, unless requested by JPA.

8. BRAND NAMES

8.1 Wherever in the specifications or bid that brand names, manufacturer, trade name, or catalog numbers are specified, it is for the purpose of establishing a grade or quality of material only; and the term "or equal" is deemed to follow.

8.2 It is the Bidder's responsibility to identify any alternate items offered in the bid, and prove to the satisfaction of JPA that said item is equal to, or better than, the product specified.

8.3 Bids for alternate items shall be stated in the appropriate space on the e-bid form, or if the proposal form does not contain blanks for alternates, Bidder MUST attach to its bid document on Company letterhead a statement identifying the manufacturer and brand name of each proposed alternate, plus a complete description of the alternate items including illustrations, performance test data and any other information necessary for an evaluation.

8.4 The Bidder must indicate any variances by item number from the bidding document no matter how slight.

8.5 If variations are not stated in the bid, it will be assumed that the item being bid fully complies with JPA's bidding documents.

9. DEMONSTRATIONS/SAMPLES

9.1 Bidders shall demonstrate the exact item(s) proposed within seven (7) calendar days from receipt of such request from JPA.

9.2 Such demonstration can be at the JPA delivery location or a surrounding community.

9.3 If items are small and malleable, the Bidder is proposing an alternate product, the Bidder shall supply a sample of the exact item. Samples will be returned at Bidder's expense after receipt by JPA of acceptable goods. The Bidder must indicate how samples are to be returned.

10. DELIVERY (Non-Construction)

10.1 Each Bidder shall state on the bid the date upon which it can make delivery of all equipment or merchandise.

10.2 JPA reserves the right to cancel orders, or any part thereof, without obligation, if delivery is not made within the time(s) specified on the bid.

10.3 All bids shall be based upon **inside** delivery of the equipment/ merchandise F.O.B. to JPA at the location specified by JPA, with all transportation charges paid.

10.4 At the time of delivery, a designated JPA employee will sign the invoice/packing slip. The signature will only indicate that the order has been received and the items actually delivered agree with the delivery invoice. This signature does not indicate all items met specifications, were received in good condition and/or that there is not possible hidden damage or shortages.

11. WARRANTIES, GUARANTEES AND MAINTENANCE

11.1 Copies of the following documents, if requested, shall accompany the bid proposal for all items being bid:

11.1.1 Manufacturer's warranties and/or guarantees.

11.1.2 Bidder's maintenance policies and associated costs.

11.2 As a minimum requirement of JPA, the Bidder will guarantee in writing that any defective components discovered within a one (1) year period after the date of acceptance shall be replaced at no expense to JPA. Replacement parts of defective components shall be shipped at no cost to JPA. Shipping costs for defective parts required to be returned to the Bidder shall be paid by the Bidder.

12. ACCEPTANCE OF MATERIAL

12.1 All components used in the manufacture or construction of materials, supplies and equipment, and all finished materials, shall be new, the latest make/model, of the best quality, and the highest grade workmanship.

12.2 Material delivered under this proposal shall remain the property of the Bidder until:

12.2.1 A physical inspection and actual usage of the material is made and found to be acceptable to JPA; and

12.2.2 Material is determined to be in full compliance with the bidding documents and accepted bid.

12.3 In the event the delivered material is found to be defective or does not conform to the bidding documents and accepted bid, JPA reserves the right to cancel the order upon written notice to the Bidder and return materials to the Bidder at Bidder's expense.

12.4 Awarded Bidder shall be required to furnish title to the material, free and clear of all liens and encumbrances, issued in the name of JPA, as required by the bidding documents or purchase orders.

12.5 Awarded Bidder's advertising decals, stickers or other signs shall not be affixed to equipment. Vehicle mud flaps shall be installed blank side out with no advertisements. Manufacturer's standard production forgings, stampings, nameplates and logos are acceptable.

13. BID EVALUATION AND AWARD

13.1 The electronic signature shall be considered an offer on the part of the Bidder. Such offer shall be deemed accepted upon issuance by JPA of purchase orders, contract award notifications, or other contract documents appropriate to the work.

13.2 No bid shall be modified or withdrawn for a period of ninety (90) calendar days after the time and date established for receiving bids, and each Bidder so agrees in submitting the bid.

13.3 In case of a discrepancy between the unit prices and their extensions, the unit prices shall govern.

13.4 The bid will be awarded to the lowest responsible, responsive Bidder whose bid will be most advantageous to JPA, and as JPA deems will best serve the requirements and interests of JPA.

13.5 JPA reserves the right to accept or reject any or all bids; to request rebids; to award bids item-by-item, with or without alternates, by groups, or "lump sum"; to waive minor irregularities in bids; such as shall best serve the requirements and interests of JPA.

13.6 In order to determine if the Bidder has the experience, qualifications, resources and necessary attributes to provide the quality workmanship, materials and management required by the plans and specifications, the Bidder may be required to complete and submit additional information as deemed necessary by JPA. Failure to provide the information requested to make this determination may be grounds for a declaration of non-responsive with respect to the Bidder.

13.7 JPA reserves the right to reject irregular bids that contain unauthorized additions, conditions, alternate bids, or irregularities that make the bid incomplete, indefinite or ambiguous.

13.8 Any governmental agency may piggyback on any contract entered into from this bid.

14. INDEMNIFICATION

14.1 The Bidder shall indemnify and hold harmless JPA from and against all losses, claims, damages, and expenses, including, attorney's fees arising out of or resulting from the performance of the contract that results in bodily injury, sickness, disease, death, or to injury to or destruction of tangible property, including the loss of use resulting therefrom and is caused in whole or in part by the Bidder, any subcontractor, any directly or indirectly employed by any of them or anyone for whose acts any of them may be liable. This section will not require the Bidder to indemnify or hold harmless JPA for any losses, claims damages, and expenses arising out of or resulting from the sole negligence of JPA.

14.2 In any and all claims against JPA or any of its members, officers or employees by an employee of the Bidder, any subcontractor, anyone directly or indirectly employed by any of them or by anyone for whose acts made by any of them may be liable, the indemnification obligation under paragraph 14.1 shall not be limited in any way by any limitation of the amount or type of damages, compensation or benefits payable by or for the Bidder or any subcontractor under workers' compensation acts, disability benefit acts or other employee benefit acts.

15. TERMS OF PAYMENT

15.1 Unless stated otherwise, JPA will begin processing payment within thirty (30) calendar days after all labor has been performed and all equipment or other merchandise has been delivered, and all such labor and equipment and other materials have met all contract specifications.

16. LAWS

16.1 The laws of the State of Nebraska shall govern the rights, obligations, and remedies of the parties under this bid and any contract reached as a result of this process.

16.2 Bidder agrees to abide by all applicable local, state and federal laws and regulations concerning the handling and disclosure of private and confidential information concerning individuals and corporations as to inventions, copyrights, patents and patent rights.

17. EQUIPMENT TAX ASSESSMENT

17.1 Any bid for public improvement shall comply with Nebraska Revised Statute Sections 77-1323 and 77-1324. Indicating; every person, partnership, limited liability company, association or corporation furnishing labor or material in the repair, alteration, improvement, erection, or construction of any public improvement shall sign a certified statement which will accompany the contract. The certified statement shall state that all equipment to be used on the project, except that acquired since the assessment date, has been assessed for taxation for the current year, giving the county where assessed.

18. AFFIRMATIVE ACTION

18.1 The City of Lincoln provides equal opportunity for all Bidders and encourages minority businesses, women's businesses and locally owned business enterprises to participate in our bidding process.

19. LIVING WAGE

19.1 The Bidders agree to pay all employees employed in the performance of this contract, a base wage of not less than the City Living Wage per section 2.81 of the Lincoln Municipal Code. This wage is subject to change every July.

20. INSURANCE

20.1 All Bidders shall take special notice of the insurance provisions required for all JPA contracts (see *Insurance Requirements for All JPA Contracts*).

21. EXECUTION OF AGREEMENT

21.1 Depending on the type of service provided, one of the following methods will be employed. The method applicable to this contract will be checked below:

____ a. **PURCHASE ORDER**, unless otherwise noted.

1. A copy of the Bidder's bid response (or referenced bid number) attached and that the same, in all particulars, becomes the contract between the parties hereto: that both parties thereby accept and agree to the terms and conditions of said bid documents.

__X__ b. **CONTRACT,** unless otherwise noted.

1. JPA will furnish copies of the Contract to the successful Bidder who shall prepare attachments as required. Insurance as evidenced by a Certificate of Insurance (as required), surety bonds properly executed (as required), and Contract signed and dated.
2. The prepared documents shall be returned to the Purchasing Office within 10 days (unless otherwise noted).
3. JPA will sign and date the Contract.
4. Upon approval and signature, the JPA will return one copy to the successful Bidder.

22. TAXES AND TAX EXEMPTION CERTIFICATE

22.1 JPA is generally exempt from any taxes imposed by the state or federal government. A Tax Exemption Certificate will be provided as applicable.

23. AUDIT ADVISORY BOARD

23.1 All parties of any JPA agreement shall be subject to audit pursuant to Chapter 4.66 of the Lincoln Municipal Code and shall make Available to a contract auditor, as defined therein, copies of all financial and performance related records and materials germane to the contract/order, as allowed by law.

24. E-VERIFY

24.1 In accordance with Neb. Rev. Stat. 4-108 through 4-114, the contractor agrees to register with and use a federal immigration verification system, to determine the work eligibility status of new employees performing services within the state of Nebraska. A federal immigration verification system means the electronic verification of the work authorization program of the Illegal Immigration Reform and Immigrant Responsibility Act of 1996, 8 U.S.C. 1324 a, otherwise known as the E-Verify Program, or an equivalent federal program designated by the United States Department of Homeland Security or other federal agency authorized to verify the work eligibility status of a newly hired employee pursuant to the Immigration Reform and Control Act of 1986. The Contractor shall not discriminate against any employee or applicant for employment to be employed in the performance of this section pursuant to the requirements of state law and 8 U.S.C.A 1324b. The contractor shall require any subcontractor to comply with the provisions of this section. For information on the E-Verify Program, go to www.uscis.gov/everify.

Addendum No. 1

Haymarket Improvements - Parking Lot, Festival Space and Pedestrian Bridge Landscape Planting,

Project 870201B
Bid No. 12-296

Addenda are instruments issued by the City prior to the date for receipt of offers which will modify or interpret the specification document by addition, deletion, clarification or correction.

Please acknowledge receipt of this addendum in the space provided in the Attribute Section. Be advised of the following changes and clarifications to the City's specification and bidding documents:

1. Added Sample Contract to the Attachment Section of the Bid.

Dated this 27th day of November 2012.

Vince M. Mejer
Purchasing Agent

EXHIBIT A TO CONTRACT AGREEMENT

ADDENDUM NO. 2

WEST HAYMARKET JOINT PUBLIC AGENCY
HAYMARKET INFRASTRUCTURE IMPROVEMENT
PARKING LOT, FESTIVAL SPACE & PEDESTRIAN BRIDGE
LANDSCAPE PLANTING
PROJECT NO. 870201B
BID NO. 12-296

Addenda are instruments issued by the Purchasing Office prior to the date or time for receipt of offers which will modify or interpret the specifications document by addition, deletion, clarification or correction.

Please acknowledge receipt of this addendum in the space provided in the Attribute Section.

Please be advised of the following changes and clarifications to the City's specification and bidding documents:

1. Refer to Sheet L4.01; Turf and Grass Legend
   a. Change seeding rates for "Tall Grass" to the following:

i. Forbs	5lbs / acre
ii. Grasses	7lbs / acre
Total	12lbs / acre

   b. Change seeding rates for "Bioretention" to the following:

i. Forbs	15lbs / acre
ii. Grasses / Sedges / Rushes	17lbs/ acre
Total	32lbs/acre

2. Refer to detail 2 on Sheet L7.01; Site Details
   a. Rip-rap apron armor shall be NDOR Type 'A' Rock Riprap.

3. Refer to the Special Provisions. Change the Title Page to Bid No. 12-296.

4. Refer to the Special Provisions. Add the following Special Provisions for Landscape Planting:

Type 'A' Rock Riprap

Description
The Contractor shall prepare the slopes and furnish and place stone on the slopes at locations shown in the plans.

Material Requirements
1. a. The rock shall be sandstone, limestone, quartzite, or other hard stone. It shall be clean and free from earth, clay, or refuse.
b. The solid rock shall have a density of at least 140 lb/CF (2245 Kg/m3).

2. Each load of rock shall be graded as shown in the requirements. The rock shall be angular in shape to allow interlocking between the various rock sizes.
3. a. Gradation control shall be done by a visual inspection that verifies the rock is reasonably well graded and does conform to the gradation requirements.
b. Each piece shall have no dimension greater than 3 times its least dimension.
4. Rock riprap shall not have a soundness loss greater than 14 percent by weight at the completion of 16 cycles of freezing and thawing when tested in accordance with NDR T 103. The rock riprap shall be prepared for the freezing and thawing tests by crushing to comply with the gradation requirements of coarse aggregate.

Rock Riprap Gradation Requirements

Size of Rock:	Percent of Total Weight
Type A	
• 150 pounds	100
• 35 pounds	50
• 2 pounds	Not to exceed 10

Construction Methods
1. a. The finished earth surface shall conform to the grades and slopes of the neat lines of the bottom surface of the riprap as shown in the plans.
b. The Contractor shall excavate for energy dissipation holes (scour holes) as prescribed in the plans.
c. All depressions shall be filled with suitable dry material which shall be thoroughly tamped or otherwise compacted in insure stability.
d. Soft, unstable materials shall be removed and replaced with suitable material which shall be thoroughly tamped or otherwise compacted to insure stability. No raised places, bumps, or depressions will be allowed.
2. The approved rock shall be dumped in such a manner as to produce a reasonably solid mass of rock within the limits shown in the plans or specified by the Landscape Architect. All material shall be placed and distributed so that there will be no large accumulations of either the larger or smaller sizes of rock.
3. Any appreciable variation from the specified thickness of the riprap shall be corrected by redistributing the rock.

Basis of Payment
NDOR Type 'A' Riprap called for on the plans, completed in conformance with the plans and specifications, and acceptable to the Landscape Architect shall be measured and paid for at the contract unit price bid per each flume unit for Erosion Stop Type 'B'. Such payment shall be full compensation for all labor, equipment, tools, materials, and incidentals necessary to complete the Work.

City of Lincoln/Lancaster County (Lincoln Purchasing)
Supplier Response

Bid Information

Bid Creator	Deb Winkler Systems Administrator
Email	dwinkler@lincoln.ne.gov
Phone	1 (402) 441-7410
Fax	1 (402) 441-6513
Bid Number	12-296 Addendum 2
Title	Haymarket Infrastructure Improvements - Parking Lot, Festival Space & Pedestrian Bridge Landscape Planting, Project No. 870201B (PW/U - Eng. Services)
Bid Type	Bid
Issue Date	11/09/2012
Close Date	12/5/2012 12:00:00 PM CST
Need by Date	

Contact Information

Address	Purchasing\City & County 440 S. 8th St. Lincoln, NE 68508
Contact	Vince M. Mejer
Department	
Building	
Floor/Room	
Telephone	(402) 441-8314
Fax	(402) 441-6513
Email	vmejer@lincoln.ne.gov

Ship to Information

Address	
Contact	
Department	
Building	
Floor/Room	
Telephone	
Fax	
Email	

Supplier Information

Company	Nebraska Nursery and Color Gardens
Address	7801 Pioneers Blvd. Lincoln, NE 68506
Contact	
Department	
Building	
Floor/Room	
Telephone	1 (402) 489-6543
Fax	1 (402) 488-0202
Email	
Submitted	12/5/2012 11:44:38 AM CST
Total	$323,540.32

Signature _____

Supplier Notes

Bid Notes

If you need assistance in preparing your bid, 1) Click the "Help" button in the upper right hand corner of any screen; 2) Contact our office at 402-441-7417 to set up a training session in Purchasing or assistance over the phone.

Bid Activities

Date	Name	Description
11/20/2012 1:30:00 PM	Pre-Bid	A Pre-bid meeting will be held Tuesday, November 20, 2012 at 1:30 p.m., at Clark Enerson Partners, 1010 Lincoln Mall, Lincoln, NE. All interested Vendors are strongly encouraged to attend.

EXHIBIT A TO CONTRACT AGREEMENT

12/5/2012 12:00:00 PM	General Contractors - Call 402-441-7417 or e-mail purchasing@lincoln.ne.gov to be added to this list.	Suppliers who will bid as a general contractor on this bid.
12/5/2012 12:00:00 PM	Sub-Contractors - Call 402-441-7417 or e-mail purchasing@lincoln.ne.gov to be added to this list.	Suppliers who will bid as a sub-contractor.

Bid Messages

Please review the following and respond where necessary

#	Name	Note	Response
1	Standard Specifications for Municipal Construction	I acknowledge reading and understanding the current City of Lincoln Standard Specifications for Municipal Construction and Lincoln Standard Plans (including General Provisions and Requirements, and Material and Construction Specifications) View at: http://www.lincoln.ne.gov/city/pworks/engine/dconst/standard/stndspec/index.htm	Yes
2	Form of Bonds	I acknowledge that a Performance Bond and a Payment Bond each in the amount of 100% of the Contract amount will be required with the signed contract upon award of this job.	Yes
3	Special Provisions/Traffic Control Provisions	I acknowledge reading and understanding the Special Provisions and/or Traffic Control Provisions.	Yes
4	Instructions to Bidders	I acknowledge reading and understanding the Instructions to Bidders.	Yes
5	Insurance Requirements	I acknowledge reading and understanding the Insurance Requirements.	Yes
6	Davis-Bacon	I acknowledge reading and understanding the 29 CFR and Davis-Bacon Wage Rates.	Yes
7	Special Provisions	I acknowledge reading and understanding the Special Provisions.	Yes
8	Plan, Profile & Detail Sheets	I acknowledge reading and understanding the Plan, Profile & Detail Sheets included with this bid.	Yes
9	Geotechnical Report	I acknowledge reading and understanding the Geotechnical Report.	Yes
10	Tax Exempt Certificate Forms	Materials being purchased in this bid are tax exempt and unit prices are reflected as such. A Purchasing Agent Appointment form and a Exempt Sales Certificate form shall be issued with contract documents. (Note: State Tax Law does not provide for sales tax exemption for proprietary functions for government, thereby Water projects are taxable.)	Yes

EXHIBIT A TO CONTRACT AGREEMENT

11	Bid Bond Submission - City	I acknowledge and understand that my bid will not be considered unless a bid bond or certified check in the sum of five percent (5%) of the total amount of the bid is made payable to the order of the City Treasurer as a guarantee of good faith prior to the bid opening. The bid security may be scanned and attached to the 'Response Attachments' section of your response or faxed to the Purchasing Office (402)441-6513. The original bond/check must then be received in the Purchasing Office, 440 S. 8th Street, Ste. 200, Lincoln, NE 68508 within three (3) days of bid closing. YOU MUST INDICATE YOUR METHOD OF BID BOND SUBMISSION IN BOX TO RIGHT!	I have scanned and attached my bid bond.
12	Unit Pricing Rules	I acknowledge the Excel spreadsheet is attached to this bid in the Response Attachment Section. The unit price of the Excel Spreadsheet takes precedence over the total submitted in Line Items.	Yes
13	Project Dates	The Contractor agrees that the Work in this Contract shall begin as soon after the Notice to Proceed as is necessary for the Contractor to complete the Work within the number of calendar days allowed and prior to the stated completion date. The completion date shall be no later than November 20, 2013.	YES
14	Employee Class Act EO	I acknowledge reading and understanding the Employee Classification Act, Executive Order 83319.	Yes
15	Employee Class Act Affidavit	I acknowledge if awarded the contract I will abide by the law, notorize and attach the Employee Classification Act Affidavit to my contract.	Yes
16	Contact	Name of person submitting this bid:	Ben Hastreiter
17	Electronic Signature	Please check here for your electronic signature.	Yes
18	Agreement to Addendum No. 1	Respondent hereby certifies that the change set forth in this addendum has been incorporated in their proposal and is part of their bid. Reason: Attached Addendum No. 1 to bid.	Yes
19	Sample Contract	I acknowledge reading and understanding the sample contract.	Yes
20	Agreement to Addendum No. 2	Respondent hereby certifies that the change set forth in this addendum has been incorporated in their proposal and is part of their bid. Reason: Attached Addendum No. 2.	Yes

Line Items

#	Qty	UOM	Description	Response
1	1	Lump Sum	Haymarket Infrastructure Improvements - Parking Lot, Festival Space & Pedestrian Bridge Landscape Planting, Project No. 870201B - Total Lump Sum of Bid	$323,540.32

Item Notes: Fill out the itemized Excel spreadsheet attached below. Attach completed spreadsheet on the 'Response Attachments' of your response.

Supplier Notes:

Response Total: $323,540.32

EXHIBIT A TO CONTRACT AGREEMENT

12-296

NEBRASKA NURSERY & COLOR GARDENS

Line No.	Pay Item No.	Description	Quantity	Unit	Unit Price	Amount
01	01.00001	Mobilization	1.0000	LS	$7,500.00	$7,500.00
02	01.01001	Const Staking	1.0000	LS	$3,800.00	$3,800.00
03	02.05001	Excavation	947.0000	CY	$19.99	$18,930.53
04	30.07005	Seeding, Ty "E"	63,295.0000	AC	$0.09	$5,696.55
05	30.08001	Sodding	100,281.0000	SF	$0.29	$29,081.49
06	31.03001	Select Topsoil	1,422.0000	CY	$26.19	$37,242.18
07	32.02001	Synthetic Fabric Silt Fence Inst	925.0000	LF	$2.29	$2,118.25
08	32.02002	Synthetic Fabric Silt Fence Maint	925.0000	LF	$1.00	$925.00
09	32.02003	Synthetic Fabric Silt Fence Rem	925.0000	LF	$0.89	$823.25
10	32.05001	ECB, Type I	8,167.0000	SY	$1.33	$10,862.11
11	32.09001	Composite Filter Sock Inst	116.0000	LF	$8.00	$928.00
12	32.09002	Composite Filter Sock Maint	116.0000	LF	$1.00	$116.00
13	32.09003	Composite Filter Sock Rem	116.0000	LF	$1.00	$116.00
14	50.00045	Erosion Stop, Type A	384.0000	SF	$19.00	$7,296.00
15	50.00001	Erosion Stop, Type B	17.0000	EA	$54.00	$918.00
16	50.00045	Seeding Type 'Tall Grass'	39,740.0000	SF	$0.11	$4,371.40
17	50.00045	Seeding Type "Bioretention"	4,996.0000	SF	$0.08	$399.68
18	50.00020	Seeding Type 'Bioretention"	3.2130	AC	$550.00	$1,767.15
19	50.00045	Bioretention Construction	431.0000	SF	$72.00	$31,032.00
20	50.00015	Site Irrigation	1.0000	LS	$55,445.00	$55,445.00
21	50.00010	Mulch	237.0000	CY	$32.50	$7,702.50
22	50.00005	Cultivated Planting Bed Edging	7,965.0000	LF	$0.15	$1,194.75
23	50.00001	Cercis canadensis (Redbud) 1-1/2" cal. B&B 8' minimum height	18.0000	EA	$129.00	$2,322.00
24	50.00001	Koelreuteria paniculata (Golden Raintree) 1-1/2" cal. B&B 8" minimum height	12.0000	EA	$121.00	$1,452.00
25	50.00001	Acer rubrum 'Autumn Spire' (Autumn Spire Maple) 2-1/2" cal. B&B 12"-14" height range	7.0000	EA	$212.00	$1,484.00
26	50.00001	Gleditsia triacanthos 'Shademaster Honeylocust) 2-1/2" B&B 12"-14" height range	15.0000	EA	$220.00	$3,300.00
27	50.00001	Gymnocladus dioicus 'Espresso' (Espresso Coffee Tree) 3" cal. B&B 14'-16' height range	25.0000	EA	$281.00	$7,025.00
28	50.00001	Plantaus x acerifolia 'Morton Circle' (Exclamation Planetree) 2-1/2" cal B&B 12'-14' height range	44.0000	EA	$255.00	$11,220.00
29	50.00001	Quercus bicolor (Swamp White Oak) 2-1/2" cal. B&B 12'-14' height range	4.0000	EA	$225.00	$900.00
30	50.00001	Quercus imbricaria (Shingle Oak) 2-1/2" cal. B&B 12'-14' height range	9.0000	EA	$247.00	$2,223.00
31	50.00001	Quercus macrocarpa (Bur Oak) 2-1/2" cal. B&B 12'-14' height range	7.0000	EA	$222.00	$1,554.00
32	50.00001	Quercus rubra (Red Oak) 3" cal. B&B 14'-16' height range	22.0000	EA	$285.00	$6,270.00
33	50.00001	Taxodium distichum (Bald Cypress 2-1/2" cal. B&B 12'-14' height range	26.0000	EA	$265.00	$6,890.00
34	50.00001	Ulmus 'Frontier' (Frontier Elm) 2-1/2" cal. B&B 12'-14' height range	7.0000	EA	$239.00	$1,673.00
35	50.00001	Ulmus japonica x wilsoniana 'Morton' (Accolade Elm) 3" cal. B&B 14'-16' height range	18.0000	EA	$277.00	$4,986.00
36	50.00001	Picea glauca 'Densata' (Black Hills Spruce) 7' minimum height, B&B	3.0000	EA	$173.00	$519.00
37	50.00001	Picea pungens 'Moerheim' (moerheim Blue Spruce) 6' minimum height, B&B	2.0000	EA	$165.00	$330.00
38	50.00001	Pinus ponderosa (Ponderosa Pine) 6' minimum height, B&B	3.0000	EA	$146.00	$438.00
39	50.00001	Cornus sericea 'Cardinal' (Cardinal Dogwood) #5 container, 30" minimum height w/6 canes	25.0000	EA	$29.78	$744.50
40	50.00001	Jumiperus virginia 'Cupressifolia' (hillspire Juniper) #7 container 48" minimum height	6.0000	EA	$46.28	$277.68
41	50.00001	Prunus besseyi 'Pawnee Buttes' (Pawnee Buttes Sand Cherry) #2 container, 12" minimum height w/3 canes	157.0000	EA	$24.83	$3,898.31
42	50.00001	Symphoricarpos 'Kolcharm' (Charming Fantasy Snowberry) #2 container, 24" minimum height w/3 canes	18.0000	EA	$24.83	$446.94
43	50.00001	Achillea millefolium 'Terra Cotta' (Terra Cotta Yarrow) #1 container	250.0000	EA	$8.32	$2,080.00
44	50.00001	Iris sibirica 'Caesar's Brother' (Caesar's Brother Iris) #1 container	157.0000	EA	$8.32	$1,306.24
45	50.00001	Liatris ligulistylis (Meadow Blazing Star) #1 container	145.0000	EA	$9.06	$1,313.70
46	50.00001	Lychnis chalcedonica (Maltese Cross #1 container	71.0000	EA	$9.06	$643.26
47	50.00001	Rudbeckia fulgida 'Goldsturm' (Goldsurm Black-eyed Susan) #1 container	104.0000	EA	$8.07	$839.28
48	50.00001	Carex pennsylvania (Pennsylvania Sedge) #1 container	545.0000	EA	$8.81	$4,801.45
49	50.00001	Bouteloua curtipendula 'Trailway' (Trailway Sideoats Grama) #1 container	1,196.0000	EA	$9.06	$10,835.76
50	50.00001	Bouteloua gracilis 'Blond Ambition' (Blond Ambition Blue Grama) #1 container	141.0000	EA	$9.06	$1,277.46
51	50.00001	Juncus tenuis 'Blue Dart' (Blue Dart Path Rush) #1 container	545.0000	EA	$9.06	$4,937.70
52	50.00001	Schizachyrium scoparium 'Carousel' (Carousel Little Bluestem) #1 container	924.0000	EA	$10.05	$9,286.20
						$323,540.32

EXHIBIT A TO CONTRACT AGREEMENT

EXHIBIT B

Intentionally Omitted

Approved by Law
12-6-12

EXHIBIT C

Construction and Maintenance Agreement
Between BNSF and the City of Lincoln

Approved by Law
12-6-2012

A- 86070

CONSTRUCTION AND MAINTENANCE AGREEMENT

THIS CONSTRUCTION AND MAINTENANCE AGREEMENT ("**C&M Agreement**") is made to be *effective the 18th day of October, 2010* ("***Effective Date***"), *by and between* **BNSF RAILWAY COMPANY**, a Delaware corporation ("**BNSF**"), and the **CITY OF LINCOLN, NEBRASKA**, a Nebraska municipal corporation ("**City**"). City and BNSF, respectively, are sometimes referred to in this C&M Agreement each as a "**Party**" and collectively, as the "**Parties**".

RECITALS

A. BNSF owns and operates a line of railroad in and through the City of Lincoln, State of Nebraska

B In an effort to strengthen the long-term economic and physical viability of the West Haymarket District and Downtown Lincoln, City plans to construct entertainment, recreation, lodging, offices, retail and/or other complementary and/or supporting facilities (collectively, the "**West Haymarket Project**") in the area shown on the map attached hereto as **Exhibit A** and incorporated herein by reference ("**Project Area**") The West Haymarket Project will include, among other things, an approximately 16,000-seat arena (the "**Arena**"), an ice center facility (the "**Ice Center**"), a district energy facility, and upgrades to parking, utilities, and surface transportation access to the area.

C. City and BNSF have entered into that certain Master Development Agreement of even date *herewith (the "**Master Agreement**"). In connection with certain economic development objectives of City* as set forth in the Master Agreement, City desires that BNSF grant certain permanent or temporary license and/or easement rights to City and certain third parties (each a "**Right of Entry**" and, in multiples, "**Rights of Entry**") for certain activities on BNSF's Property (defined below) (each a "**Right of Entry Work**" and collectively, "**Rights of Entry Work**"). For the purposes of this C&M Agreement, the term "BNSF's Property" shall mean the applicable Existing BNSF Property, Retained BNSF Property, and/or Replacement BNSF Property which is under BNSF ownership at the time work is done under the Right of Entry. All capitalized terms not defined herein shall have the same meaning as in the Master Agreement.

AGREEMENTS

NOW, THEREFORE, in consideration of the mutual covenants and agreements of the Parties contained herein, the receipt and sufficiency of which are hereby acknowledged, the Parties agree as follows.

ARTICLE I – CITY C&M WORK. The provisions of this C&M Agreement, in addition to and not in limitation of the provisions contained in the applicable Rights of Entry, shall apply with respect to the Rights of Entry Work and any other construction, maintenance, Operation (as defined in the Master Agreement), or other work being performed on or adjacent to BNSF property by or for City (collectively, the "**City C&M Work**"). In the event of conflicts between the terms of this C&M Agreement and any applicable Right of Entry agreement, the most restrictive provisions shall apply to City.

ARTICLE II – BNSF OBLIGATIONS. In consideration of the covenants of City set forth herein and the faithful performance thereof, BNSF agrees to do the following:

2.1 Grant to City the following temporary Rights of Entry in accordance with and as described in Section 3.2 of the Master Agreement:

2.1.1 The Temporary Access License for Initial Construction as defined and described in Section 3.2.1 of the Master Agreement and attached thereto as Exhibit EE;

2.1.2 The Temporary Grading License for Storm Water Mitigation as defined and described in Section 3.2.2(a) of the Master Agreement and attached thereto as Exhibit FF-1;

2.1.3 The Temporary Access License for Soil Staging as defined and described in Section 3.2.3 of the Master Agreement and attached thereto as Exhibit GG;

2.1.4 The Temporary Access License for Construction Staging - Pedestrian Bridge as defined and described in Section 3.2.4(a) of the Master Agreement and attached thereto as Exhibit HH-1;

2.1.5 The Temporary Access License for Amtrak Work as defined and described in Section 3.2.5 of the Master Agreement and attached thereto as Exhibit II;

2.1.6 The Temporary Grading License for Arena Drive and Parking Lot Construction as defined and described in Section 3.2.9 of the Master Agreement and attached thereto as Exhibit KK;

2.1.7 The Temporary Access License for Survey / Geotech / Environmental Activities as defined and described in Section 3.2.11(a) of the Master Agreement and attached thereto as Exhibit BB;

2.1.8 The Crossing Agreements as defined and described in Section 3.2.12 of the Master Agreement and attached thereto as Exhibit UU.

2.1.9 The Temporary Construction and Access License for Sanitary Sewer Work as defined and described in Section 3.2.11(b) of the Master Agreement and attached thereto as Exhibit BB-1.

2.2 Grant to City the following permanent Rights of Entry in accordance with and as described in Section 3.2 of the Master Agreement:

2.2.1 The Storm Water Mitigation Easement as defined and described in Section 3.2.2(b) of the Master Agreement and attached thereto as Exhibit FF;

2.2.2 The Pedestrian Bridge Easement as defined and described in Section 3.2.4(b) of the Master Agreement and attached thereto as Exhibit HH; and

2.2.3 The City Utility Easements as defined and described in Section 3.2.7 of the Master Agreement and attached thereto as Exhibit TT and Exhibit TT-1.

2.2.4 The 2nd & J Utility Easement as defined and described in Section 3.2.10 of the Master Agreement and attached thereto as Exhibit TT.

2.3 Grant to City the Security Fencing License in accordance with and as defined and described in Section 3.2.8 of the Master Agreement and attached thereto as Exhibit JJ.

ARTICLE III – CITY OBLIGATIONS

3.1 Plans.

3.1.1 If any City C&M Work is not included in the City Work Final Design (as defined in the Master Agreement), City must furnish to BNSF four sets of plans and specifications for such City C&M Work (reduced size 11" x 17"), together with two copies of calculations, and two copies of specifications in **English Units**, for approval prior to commencement of any construction. For each set of such plans and specifications submitted by City to BNSF, BNSF shall approve or reject such plans and specifications within thirty (30) days after BNSF's receipt thereof and, if rejected, the reasons for such rejection shall be set forth in reasonable detail. Corrected plans and specifications shall be approved or rejected in the manner hereinbefore provided. BNSF will give City final written approval of the plans and specifications substantially in the form of **Exhibit B**, attached hereto and incorporated herein by reference. Upon BNSF's final written approval of the plans and specifications (the "**Approved Plans**"), the Approved Plans will

become part of this C&M Agreement and incorporated herein. Any approval of the Approved Plans by BNSF shall in no way obligate BNSF in any manner with respect to the finished product design and/or construction. Any approval by BNSF shall mean only that the Approved Plans meet the subjective standards of BNSF, and such approval by BNSF shall not be deemed to mean that the Approved Plans or construction is structurally sound and appropriate or that the Approved Plans meet applicable regulations, laws, statutes or local ordinances and/or building codes.

3.1.2 City must provide for and maintain minimum vertical and horizontal clearances, as required in the Contractor Requirements in **Exhibit C**, attached hereto and incorporated herein by reference, and as approved by BNSF as part of the City Work Final Design or any other Approved Plans.

3.1.3 Prior to the start of any segment of City C&M Work on or affecting BNSF's property, City must provide to BNSF, and BNSF must approve, exact minimum vertical and horizontal clearances for such segment of City C&M Work being constructed pursuant to the City Work Final Design. Upon BNSF's approval of each segment of City C&M Work, BNSF and City agree to execute an amendment to this C&M Agreement incorporating the approved clearances into this C&M Agreement as **Exhibit D** ("**Final Clearances**"). City shall not deviate from the Final Clearances for the applicable segment of City C&M Work without the prior written approval of BNSF.

3.1.4 City or its contractor(s) must submit four (4) copies of any plans (including two sets of calculations in **English Units**) for proposed shoring, falsework or cribbing to be used over, under, or adjacent to BNSF's tracks to BNSF's Project Engineer (defined below) for approval. The shoring, falsework or cribbing used by City Contractors (defined below) shall comply with all applicable requirements *promulgated by state and federal agencies, departments, commissions and other legislative bodies.*

3.1.5 (a) For purposes of notices required under this C&M to be made to BNSF's Project Engineer, Division Engineer, Manager Signal, and Director Engineering Services, the following contact information is in effect at the Effective Date:

(i) BNSF's "**Project Engineer**" is:

Gerald Maczuga
Gerald.Maczuga@BNSF.com
402-458-7537 (office)
206-265-2427 (cell)
402-458-4376 (fax)

(ii) BNSF's "**Division Engineer**" is:

Andrew Shearer
Andrew.Shearer@BNSF.com
402-458-7724 (office)

(iii) BNSF's "**Manager Signal**" is:

Mike Koetter
Michael.Koetter@BNSF.com
402-458-7504 (office)
402-458-7590 (fax)

(iv) BNSF's "***Director Engineering Services***" is:

Tom Schmidt
Thomas.Schmidt@BNSF.com
913-551-4330 (office)

(b) The contact information in **Section 3.1.5(a)** may be changed from time to time in accordance with the notice provisions of **Section 4.6** below.

3.2 Additional City Requirements.

3.2.1 City must supervise and inspect the operations of all City Contractors to assure compliance with the City Work Final Design and all other Approved Plans, the terms of this C&M Agreement and all communicated and applicable safety requirements of BNSF.

3.2.2 City must make any required applications and obtain all required permits and approvals for the City C&M Work.

3.2.3 City must acquire all rights of way necessary for the City C&M Work.

3.2.4 City must furnish all labor, materials, tools and equipment for the performance of the City C&M Work.

3.2.5 City must advise BNSF's Project Engineer in writing of: (i) the completion date of each Right of Entry Work within thirty (30) days after each such completion date and (ii) the date on which City and/or City Contractor will meet with BNSF for the purpose of making final inspection of each Right of Entry Work.

3.2.6 City must notify and obtain prior authorization from BNSF's Project Engineer before entering BNSF's right-of-way for inspection, construction, maintenance, or any other purposes. Prior to performing any inspection, construction or maintenance with its own personnel, City shall: comply with all of BNSF's communicated and applicable safety rules and regulations; require any City employee performing maintenance to complete the safety training program at the Website "contractororientation.com"; notify BNSF when, pursuant to the requirements of **Exhibit C** or **Section 3.3.6** below, flaggers are required to be present; and procure, and have approved by BNSF's Risk Management Department, Railroad Protective Liability insurance.

3.2.7 City agrees to reimburse BNSF for work of an emergency nature caused by City or City Contractors in connection with the City C&M Work which BNSF deems is reasonably necessary for the immediate restoration of railroad operations, or for the protection of persons or BNSF property. Such emergency work may be performed by BNSF without prior approval of City and City agrees to fully reimburse BNSF for all such work.

3.2.8 The City C&M Work must be performed by City or City Contractors in a manner that will not endanger or interfere with the safe and timely operations of BNSF and its facilities.

3.2.9 City must include the following provisions in any contract with City Contractors:

3.2.9.1 City Contractor is placed on notice that fiber optic, communication and other cable lines and systems (collectively, the "**Lines**") owned by various telecommunications companies may be buried on BNSF's property or right-of-way. The locations of these Lines have been included on the plans based on information from the telecommunications companies. City Contractor will be responsible for contacting BNSF's Project Engineer, BNSF's Manager Signal, and the telecommunications companies and notifying them of any work that may damage these Lines or facilities and/or interfere with their service. City Contractor must also mark all Lines shown on the plans or marked in the field in order to verify their locations. City Contractor must also use all reasonable methods when working in the BNSF right-of-way or on BNSF property to determine if any other Lines (fiber optic, cable, communication or otherwise) may exist.

3.2.9.2 City Contractor will be responsible for the rearrangement of any facilities or Lines determined to interfere with the City C&M Work. City Contractor must cooperate fully with any telecommunications company(ies) in performing such rearrangements.

3.2.9.3 Failure to mark or identify these Lines will be sufficient cause for BNSF's Project Engineer to stop all or any part of the City C&M Work at no cost to City or BNSF until these items are completed.

3.2.9.4 All City C&M Work performed within the limits of BNSF's right-of-way must be performed in a good and workmanlike manner in accordance with plans and specifications approved by BNSF.

3.2.9.5 Changes or modifications during the City C&M Work that affect safety or BNSF operations must be subject to BNSF's approval.

3.2.9.6 No work will be commenced within BNSF's right-of-way until each of the prime contractors employed in connection with the City C&M Work have (i) executed and delivered to BNSF a letter agreement in the form of **Exhibit C-1(A)** attached hereto and incorporated herein by reference, and (ii) delivered to and secured BNSF's approval of the required insurance.

3.2.9.7 Notwithstanding the provisions of **Section 3.2.9.6** above, solely for the temporary Rights of Entry described in **Sections 2.1.1**, **2.1.3**, **2.1.4**, and **2.1.5** above, no work will be commenced within BNSF's right-of-way until each of the prime contractors employed in connection with the City C&M Work under the referenced temporary Rights of Entry have (i) executed and delivered to BNSF a letter agreement in the form of **Exhibit C-1(B)** attached hereto and incorporated herein by reference, and (ii) delivered to and secured BNSF's approval of the required insurance.

3.2.9.8 To facilitate scheduling for the City C&M Work, City Contractors shall give BNSF's Project Engineer eight (8) weeks' advance notice of the proposed times and dates for work windows, except in case of emergency, in which event City Contractors must notify BNSF's Project Engineer by telephone at (402) 458-7537 as soon as practicable and shall promptly thereafter follow up with written notice to BNSF's Project Engineer at City Contractor's earliest opportunity. Notwithstanding the foregoing, in no event shall City or any City Contractors enter onto BNSF's property prior to receiving written approval for such entry from BNSF's Project Engineer. BNSF and the City Contractors will establish mutually agreeable work windows for the City C&M Work. BNSF has the right at any time to revise or change the work windows, due to train operations or service obligations. BNSF will not be responsible for any additional costs and expenses resulting from a change in work windows. Additional costs and expenses resulting from a change in work windows shall be accounted for in the contractor's expenses for the City C&M Work.

3.3 Construction and Contractor Requirements.

3.3.1 Contractor Requirements. For the City C&M Work, City must comply, and cause all of its contractors (each a "**City Contractor**", and collectively the "**City Contractors**") to comply, with the obligations set forth in **Exhibit C** attached hereto and incorporated herein by reference, and cause all City Contractor(s) for such work to execute and deliver a Contractor Right of Entry ("**CROE**") in the form of **Exhibit C-1(A)** or **Exhibit C-1(B)**, as applicable. In addition, all City C&M Work must comply with all of the following requirements:

3.3.2 Standards. All City C&M Work must performed (i) in a good and workmanlike manner, (ii) in accordance with the applicable City Work Final Design or other Approved Plans, (iii) in conformance with applicable building codes and all applicable engineering, safety and any and all laws, statutes, regulations, ordinances, orders, covenants, restrictions, or decisions of any court of competent jurisdiction ("**Legal Requirements**"), (iv) in accordance with the accepted industry standards of care, skill and diligence, and (v) in such a manner as shall not adversely affect the structural integrity or maintenance of any BNSF improvements or other improvements on or near BNSF property, or any lateral support of any structures adjacent to or in the proximity of any BNSF improvements or BNSF property. In addition, each

portion of the City C&M Work must be promptly commenced by the Party obligated hereunder to perform the same and thereafter diligently prosecuted to conclusion in its logical order and sequence. Furthermore, any changes or modifications of the City C&M Work which affect BNSF will be subject to BNSF's written approval prior to the commencement of any such changes or modifications from BNSF's Project Engineer.

3.3.3 Site Cleanup and Restoration. City shall be responsible for all job site cleanup and restoration, including removal of all construction materials, concrete debris, surplus soil, refuse, *contaminated soils, asphalt debris, litter and other waste materials resulting from the City C&M Work to the* reasonable satisfaction of BNSF's Division Engineer.

3.3.4 Safety/Security.

3.3.4.1 During the City C&M Work, City, at City's sole cost, shall perform all activities and work in such a manner as to preclude personal injury or property damage to BNSF or any other party, and shall ensure that there is no interference with the railroad operations or other activities of BNSF, or anyone present on BNSF's property with the authority or permission of BNSF. City shall not disturb any improvements of BNSF or BNSF's existing lessees, licensees, license beneficiaries or lien holders, if any, or interfere with the use of such improvements, except as permitted by **Section 3.3.5** below.

3.3.4.2 Prior to entering BNSF's property to perform the City C&M Work, City shall *cause all City Contractor(s) to comply with all of BNSF's communicated and applicable safety and security* rules and regulations and complete the safety training program at the Website "www.contractororientation.com" or then-current program designated by BNSF (the "**Safety Orientation**") and eRAILSAFE or then-current security program designated by BNSF (the "**Security Orientation**") within one year prior to entering upon BNSF's property. Additionally, City must ensure that each and every employee of all City Contractors possess a card certifying completion of the Safety Orientation and the Security Orientation prior to entering upon BNSF's property. City must renew the Safety Orientation and Security Orientation annually.

3.3.4.3 City must supervise and inspect the activities of all City Contractors entering onto BNSF's property to perform the City C&M Work, and assure compliance with the applicable Approved Plans, the terms of this C&M Agreement, and all communicated and applicable safety requirements of BNSF. BNSF will have the right to stop work if any of the following events take place: (i) If BNSF determines that proper supervision and inspection are not being performed by City at any time during the City C&M Work, (ii) any City Contractor performs any work in a manner contrary to the applicable Approved Plans; (iii) any City Contractor, in BNSF's opinion, prosecutes its work in a manner which is hazardous to BNSF property, facilities, personnel, or the safe and expeditious movement of railroad traffic; or (iv) the insurance described herein or in **Exhibit C-1(A)** or **Exhibit C-1(B)**, as applicable, is canceled or expires. The work stoppage will continue until all necessary actions are taken by City to rectify the situation to the satisfaction of BNSF's Division Engineer or until additional insurance has been delivered to and accepted by BNSF. Any such work stoppage under this provision will not give rise to any liability on the part of BNSF. BNSF's right to stop the work is in addition to any other rights BNSF may have under this C&M Agreement or an applicable Right of Entry. In the event that BNSF desires to stop work, BNSF agrees to immediately notify City. Notwithstanding the foregoing, BNSF has no duty or obligation to observe or inspect, or to halt work by any City Contractor on BNSF's property, it being solely City's responsibility to ensure that work performed by any City Contractor is conducted in compliance with *the terms of this C&M Agreement, all Legal Requirements and the applicable Approved Plans.*

3.3.5 Disturbance of Improvements. City will be responsible at no cost to BNSF to locate and make any adjustments necessary to any wire lines, pipe lines, or other utilities, fences, buildings, improvements or other facilities located within BNSF's property (collectively, "**Other Improvements**"). City must contact the owner(s) of the Other Improvements notifying them of any work that may damage these Other Improvements and/or interfere with their service and, if required, obtain the owner's written approval prior to so affecting the Other Improvements. City must mark all BNSF improvements and Other Improvements on the applicable Approved Plans and mark all BNSF improvements and Other Improvements in the field in order to verify their locations. City must also use all reasonable methods when working on or near BNSF's property to determine if any BNSF improvements or

Other Improvements (fiber optic, cable, communication or otherwise) may exist. Failure to mark or identify any BNSF improvements or Other Improvements will be sufficient cause for BNSF to stop construction at no cost to BNSF until such items are completed. City must make all adjustments and other work described in this **Section 3.3.5**, including without limitation adjustments to Other Improvements and work on and affecting BNSF property, in a manner that does not adversely impact utility service to BNSF. City shall use commercially reasonable efforts to cause, at its expense, any utilities for its operations to be separately metered from utilities serving BNSF's operations by the date set forth on the Timeline (as defined in the Master Agreement).

3.3.6 Flagging. Subject to modification in writing by BNSF's Division Engineer, no City Contractor shall conduct any activities on, or be present on, any portion of BNSF's property that is within twenty-five (25) feet of any active railroad track or where any such activities have the potential to foul any active railroad track, except in the presence of a flagger. In addition to and not in limitation of the foregoing, City shall, and shall cause its City Contractors to, comply with all BNSF requirements concerning flagging, including without limitation the provisions of Section 1.05 of **Exhibit C**. BNSF shall arrange for the presence of flaggers as soon as practicable after receipt of notice from City in accordance with Section 1.05.01 of **Exhibit C**; provided, however, BNSF shall not be held responsible for City delays when flaggers are not available.

3.3.7 Flagging Costs. Flagging costs of the Included BNSF Work (as defined in the Master Agreement) are the responsibility of BNSF to the extent described in Section 2.2(i) of the Master Agreement. All other flagging costs, including without limitation flagging costs for City C&M Work, BNSF Additional Cost Work and any other work that is or becomes a part of the West Haymarket Project, shall be at City's cost and expense; provided, however, to the extent BNSF is performing work requiring flagging that is the responsibility of BNSF (under the first sentence of this **Section 3.3.7**) at the same time and in the same location as the City C&M Work, BNSF Additional Cost Work and/or any other work that is or becomes a part of the West Haymarket Project, such flagging costs and expenses shall be deemed to be part of the Included BNSF Work. Notwithstanding the foregoing, however, if the City C&M Work, BNSF Additional Cost Work or any other work that is or becomes part of the West Haymarket Project is of such magnitude that additional flaggers or additional flagging time is required, then City shall be responsible for all flagging costs and expenses for such incremental flaggers and additional flagging time as BNSF Additional City Cost Work. As further described in Section 1.05.03c of **Exhibit C**, the governmental flagging rate in effect at the time of performance by the flaggers will be used to calculate flagging costs. As more particularly described in Section 2.7.2 of the Master Agreement and also in the Escrow Agreement (as defined in the Master Agreement), City shall deposit additional amounts, including amounts for estimated flagging costs, into escrow for BNSF Additional City Cost Work.

3.3.8 No Unauthorized Tests or Digging. No City Contractor shall conduct any tests, investigations or any other activity using mechanized equipment and/or machinery, or place or store any mechanized equipment, tools or other materials, within twenty-five (25) feet of the centerline of any railroad track on BNSF's property, except after City has obtained written approval from BNSF Director Engineering Services, and then only in strict accordance with the terms and any conditions of such approval.

3.3.9 Drainage. Any and all cuts and fills, excavations or embankments as part of the City C&M Work shall be deemed to be a part of the City C&M Work and shall be made by City in such manner, form and to the extent as will provide adequate drainage of and from BNSF's property and any adjoining BNSF right of way. Wherever any such fill or embankment shall or may obstruct the natural and pre-existing drainage from either or both BNSF's property and BNSF's adjoining right of way, City shall construct such culverts or drains to preserve such natural and pre-existing drainage, and such culverts or drains shall also be deemed to be a part of the City C&M Work. City shall wherever necessary with respect to the City C&M Work, construct extensions of existing drains, culverts or ditches through or along BNSF's property (which extensions will also be deemed to be a part of the City C&M Work), such extensions to be of adequate sectional dimensions to preserve flowage of drainage or other waters, and/or material and workmanship equally as good as those now existing.

3.3.10 Liens. City shall promptly pay and discharge any and all liens arising out of any construction done, suffered or permitted to be done by City. BNSF is hereby authorized to post any notices

or take any other action upon or with respect to BNSF's property that is or may be permitted by Legal Requirements to prevent the attachment of any such liens to any portion of BNSF's property; provided, however, that failure of BNSF to take any such action shall not relieve City of any obligation or liability under this Section or any other section of this C&M Agreement. City shall include in its contracts with all City Contractors, and require all contractors performing any work on BNSF's property or providing materials to include in their contracts with their subcontractors, a notice and acknowledgement by the party providing work or materials that BNSF is not liable for any amounts due such contractor or contractors and waiving any right to place a lien on BNSF's property.

3.4 Environmental Compliance and Notification.

3.4.1 Compliance with Environmental Laws. City shall cause its contractors and employees to strictly comply with all federal, state and local environmental laws and regulations in its use of BNSF's property, including, but not limited to, the Resource Conservation and Recovery Act, as amended (RCRA), the Clean Water Act, the Oil Pollution Act, the Hazardous Materials Transportation Act, CERCLA (collectively, the "**Environmental Laws**") with respect to the BNSF property. City and its contractors, if any, shall not maintain a "treatment," "storage," "transfer" or "disposal" facility, or "underground storage tank," as those terms are defined by Environmental Laws, on BNSF's property. City and its contractors, if any, shall not handle, transport, release or suffer the release of "hazardous waste" or "hazardous substances", as "hazardous waste" and "hazardous substances" may now or in the future be defined by any Environmental Laws, except as may be pre-existing in BNSF's property and as encountered in the City C&M Work and then only in compliance with Environmental Laws and the SMP (defined below), and shall not use any soils or other materials containing hazardous waste or hazardous substances in connection with the City C&M Work, or otherwise bring any hazardous waste or hazardous substances onto any BNSF property.

3.4.2 Notice of Release. City shall give BNSF immediate notice to BNSF's Resource Operations Center at (800) 832-5452 in the event of any release of hazardous substances on or from BNSF's property, violation of Environmental Laws, or inspection or inquiry by governmental authorities charged with enforcing Environmental Laws with respect to City's use of BNSF's property. City shall use best efforts to promptly respond to any release arising from or related to its activities contemplated in this C&M Agreement only in compliance with Environmental Laws and the SMP. City shall also give BNSF notice of all measures undertaken on City's behalf to investigate, remediate, respond to or otherwise cure such release or violation.

3.4.3 Remediation of Release. In the event City has notice of a release or violation of Environmental Laws which occurred or may occur as a result of City's activities contemplated in this C&M Agreement, City shall take timely measures to investigate, remediate, respond to or otherwise cure as required by applicable law such release or violation affecting BNSF's property or improvements. If during the City C&M Work, soils or other materials considered to be environmentally contaminated are exposed, City will remove and safely dispose of said contaminated soils only in compliance with Environmental Laws and the SMP. Determination of soils contamination and applicable disposal procedures thereof will be made only by an agency having the capacity and authority to make such a determination.

3.4.4 Evidence of Compliance. City agrees to periodically to furnish BNSF upon written request with reasonable proof that it is in compliance with this **Article III, Section 3.4**.

3.4.5 Soil Management Plan. In addition to the other obligations of City and City Contractors as set forth herein, including but not limited to the provisions of **Exhibit C** and, as applicable, **Exhibit C-1(A)** or **Exhibit C-1(B)**, the Soil Management Plan attached hereto as **Exhibit E** ("**SMP**") sets forth additional obligations of City and BNSF with respect to the proper management of impacted environmental media during the Development Period (as defined in the Master Agreement).

3.5 Timing.

3.5.1 City will use commercially reasonable efforts to perform all City C&M Work in accordance with the Timeline.

3.5.2 BNSF and City mutually agree that no construction activities for the City C&M Work, nor future maintenance of any improvements which have a reasonable likelihood to delay train traffic on BNSF's main lines, will be permitted during the fourth quarter of each calendar year. Emergency work will be permitted only upon prior notification to BNSF's Network Operations Center (telephone number: 800 832-5452). BNSF and City mutually understand and agree that trains cannot be subjected to delay during this time period.

3.6 Indemnifications.

3.6.1 **TO THE FULLEST EXTENT PERMITTED BY LAW, CITY SHALL, AND SHALL CAUSE CITY'S CONTRACTORS TO, RELEASE, INDEMNIFY, DEFEND AND HOLD HARMLESS BNSF *AND BNSF'S AFFILIATED COMPANIES, PARTNERS, SUCCESSORS, ASSIGNS, LEGAL* REPRESENTATIVES, OFFICERS, DIRECTORS, SHAREHOLDERS, EMPLOYEES AND AGENTS FOR, FROM AND AGAINST ANY AND ALL CLAIMS, LIABILITIES, FINES, PENALTIES, COSTS, DAMAGES, LOSSES, LIENS, CAUSES OF ACTION, SUITS, DEMANDS, JUDGMENTS AND EXPENSES (INCLUDING, WITHOUT LIMITATION, COURT COSTS AND ATTORNEYS' FEES) OF ANY NATURE, KIND OR DESCRIPTION OF ANY PERSON (INCLUDING, WITHOUT LIMITATION, THE EMPLOYEES OF THE PARTIES HERETO) OR ENTITY DIRECTLY OR INDIRECTLY (COLLECTIVELY, "LIABILITIES") ARISING OUT OF, RESULTING FROM OR CAUSALLY RELATED TO (IN WHOLE OR IN PART):**

(i) **ANY RIGHTS OR INTERESTS GRANTED TO CITY OR ANY CITY PARTY (DEFINED BELOW) PURSUANT TO THIS C&M AGREEMENT, THE RIGHTS OF ENTRY, OR THE LICENSES AND/OR EASEMENTS GRANTED TO CITY PURSUANT TO THIS C&M AGREEMENT;**

(ii) **THE USE, OCCUPANCY OR PRESENCE OF CITY AND/OR CITY CONTRACTORS AND THEIR RESPECTIVE SUBCONTRACTORS, EMPLOYEES OR AGENTS (SUCH CITY CONTRACTORS, SUBCONTRACTORS, EMPLOYEES AND AGENTS BEING REFERRED TO INDIVIDUALLY AS A "CITY PARTY" AND COLLECTIVELY, THE "CITY PARTIES") AND/OR ANY *WORK PERFORMED BY CITY OR ANY CITY PARTY IN, ON, OR ABOUT BNSF'S PROPERTY OR* RIGHT-OF-WAY AND/OR THE WEST HAYMARKET PROJECT, INCLUDING, WITHOUT LIMITATION, OPERATION OF THE PEDESTRIAN BRIDGE, SECURITY FENCING (AS DEFINED IN THE MASTER AGREEMENT), OR STORM WATER MITIGATION (AS DEFINED IN THE MASTER AGREEMENT) BY CITY;**

(iii) **ANY ENVIRONMENTAL MATTERS ARISING FROM THE WEST HAYMARKET PROJECT AND/OR AFFECTING THE PROJECT AREA OR ANY PROPERTY ADJACENT THERETO;**

(iv) **ANY AND ALL CLAIMS BROUGHT BY ANY PARTY RELATED TO OR ARISING FROM THE ACQUISITION AND/OR DEVELOPMENT OF ANY AND ALL PROPERTY AS PART OF THE WEST HAYMARKET PROJECT, INCLUDING WITHOUT LIMITATION PROPERTY DESCRIBED IN THIS C&M AGREEMENT, THE MASTER AGREEMENT, THE EXCHANGE AGREEMENT, AND/OR THE RIGHTS OF ENTRY AGREEMENTS;**

(v) **THE CONDITION OF THE REPLACEMENT BNSF PROPERTY, INCLUDING WITHOUT LIMITATION ANY AND ALL CLAIMS RELATED TO OR ARISING FROM THE EXISTENCE OF ANY THIRD PARTY RESERVED RIGHTS AND/OR ANY THIRD PARTY'S EXERCISE OF ITS RESERVED RIGHTS;**

(vi) **ANY DAMAGE TO OR DESTRUCTION OF ANY TELECOMMUNICATION LINES IN CONNECTION WITH THE WEST HAYMARKET PROJECT BY CITY OR ANY CITY PARTY, INCLUDING BUT NOT LIMITED TO (A) ANY INJURY TO OR DEATH OF ANY PERSON EMPLOYED BY OR ON BEHALF OF ANY TELECOMMUNICATIONS COMPANY, AND/OR ITS CONTRACTORS, AGENTS AND/OR EMPLOYEES AS A RESULT OF SUCH DAMAGE OR DESTRUCTION, AND/OR (B) ANY CLAIM OR CAUSE OF ACTION FOR ALLEGED LOSS OF PROFITS**

OR REVENUE BY, OR LOSS OF SERVICE BY A CUSTOMER OR USER OF SUCH TELECOMMUNICATION COMPANY(IES) AS A RESULT OF SUCH DAMAGE OR DESTRUCTION;

(vii) **CITY'S OR ANY CITY PARTY'S BREACH OF THE TERMS AND CONDITIONS OF THIS C&M AGREEMENT, THE RIGHTS OF ENTRY, OR THE LICENSES AND/OR EASEMENTS GRANTED TO CITY PURSUANT TO THE MASTER AGREEMENT;**

(viii) **ANY ACT OR OMISSION OF CITY OR ITS OFFICERS, AGENTS, INVITEES, EMPLOYEES OR CONTRACTORS, OR A CITY PARTY, OR ANYONE DIRECTLY OR INDIRECTLY EMPLOYED BY ANY OF THEM, OR ANYONE THEY CONTROL OR EXERCISE CONTROL OVER.**

THE LIABILITY ASSUMED BY CITY AND THE CITY CONTRACTORS WILL NOT BE AFFECTED BY THE FACT, IF IT IS A FACT, THAT ANY DAMAGE, DESTRUCTION, INJURY OR DEATH WAS OCCASIONED BY OR CONTRIBUTED TO BY THE NEGLIGENCE OF BNSF, ITS AGENTS, SERVANTS, EMPLOYEES OR OTHERWISE, BUT EXCLUDING CLAIMS WHOLLY CAUSED BY BNSF'S SOLE NEGLIGENCE AND EXCLUDING CLAIMS TO THE EXTENT THAT SUCH CLAIMS ARE CAUSED BY THE WILLFUL MISCONDUCT OR GROSS NEGLIGENCE OF BNSF.

3.6.2 **FURTHER, TO THE FULLEST EXTENT PERMITTED BY LAW, CITY SHALL, AND SHALL CAUSE CITY'S CONTRACTORS TO, NOW AND FOREVER WAIVE ANY AND ALL CLAIMS, REGARDLESS OF WHETHER SUCH CLAIMS ARE BASED ON STRICT LIABILITY, NEGLIGENCE OR OTHERWISE, THAT BNSF IS AN "OWNER", "OPERATOR", "ARRANGER", OR "TRANSPORTER" WITH RESPECT TO THE EXCHANGE PROPERTIES (AS DEFINED IN THE EXCHANGE AGREEMENT), OR THE WEST HAYMARKET PROJECT AND/OR THE PROJECT AREA OR ANY PROPERTY ADJACENT THERETO, FOR THE PURPOSES OF CERCLA OR OTHER ENVIRONMENTAL LAWS. CITY WILL, AND WILL CAUSE CITY'S CONTRACTORS TO, INDEMNIFY, DEFEND AND HOLD BNSF HARMLESS FROM ANY AND ALL SUCH CLAIMS REGARDLESS OF THE NEGLIGENCE OF BNSF. CITY FURTHER AGREES THAT THE USE OF THE EXCHANGE PROPERTIES, OR THE WEST HAYMARKET PROJECT AND/OR THE PROJECT AREA OR ANY PROPERTY ADJACENT THERETO, AS CONTEMPLATED BY THIS C&M AGREEMENT SHALL NOT *IN ANY WAY SUBJECT BNSF TO CLAIMS THAT BNSF IS OTHER THAN A COMMON CARRIER FOR* PURPOSES OF ENVIRONMENTAL LAWS AND EXPRESSLY AGREES TO INDEMNIFY, DEFEND, AND HOLD BNSF HARMLESS FOR ANY AND ALL SUCH CLAIMS. IN NO EVENT SHALL BNSF BE RESPONSIBLE FOR THE ENVIRONMENTAL CONDITION OF THE EXCHANGE PROPERTIES, OR THE WEST HAYMARKET PROJECT AND/OR THE PROJECT AREA, OR ANY PROPERTY ADJACENT THERETO.**

3.6.3 **FURTHER, TO THE FULLEST EXTENT PERMITTED BY LAW, CITY AGREES, AND SHALL CAUSE CITY'S CONTRACTORS TO AGREE, REGARDLESS OF ANY NEGLIGENCE OR ALLEGED NEGLIGENCE OF BNSF, TO INDEMNIFY, DEFEND AND HOLD HARMLESS BNSF AGAINST AND ASSUME THE DEFENSE OF ANY LIABILITIES ASSERTED AGAINST OR SUFFERED BY BNSF UNDER OR RELATED TO THE FEDERAL EMPLOYERS' LIABILITY ACT ("FELA") WHENEVER EMPLOYEES OF CITY OR ANY OF ITS AGENTS, INVITEES, OR CONTRACTORS CLAIM OR ALLEGE THAT THEY ARE EMPLOYEES OF BNSF OR OTHERWISE. THIS INDEMNITY SHALL ALSO EXTEND, ON THE SAME BASIS, TO FELA CLAIMS BASED ON ACTUAL OR ALLEGED VIOLATIONS OF ANY FEDERAL, STATE OR LOCAL LAWS OR REGULATIONS, INCLUDING BUT NOT LIMITED TO THE SAFETY APPLIANCE ACT, THE LOCOMOTIVE INSPECTION ACT, THE OCCUPATIONAL SAFETY AND HEALTH ACT, THE RESOURCE CONSERVATION AND RECOVERY ACT, AND ANY SIMILAR STATE OR FEDERAL STATUTE.**

3.6.4 City agrees that its obligations under the provisions of this **Section 3.6** expressly includes claims related to property related to the West Haymarket Project that was formerly, but not currently, owned by BNSF and BNSF's predecessors-in-interest. City's indemnification obligations herein shall be in addition to, and not in limitation of, City's indemnification obligations pursuant to the terms and provisions of the Master Agreement, the Exchange Agreement and the Rights of Entry agreements.

3.7 Waiver of Municipal and Sovereign Immunity. To the fullest extent permitted by law, City waives its municipal immunity and its sovereign immunity with respect to BNSF for matters arising out of the West Haymarket Project, the Master Agreement, the Exchange Agreement, the Rights of Entry agreements, and this C&M Agreement, including, without limitation, (i) for environmental and other conditions of the Replacement BNSF Property that City is conveying to BNSF pursuant to the Master Agreement and the Exchange Agreement; (ii) for environmental and other conditions of the real property that BNSF is quitclaiming to City pursuant to the Master Agreement and the Exchange Agreement and of property related to the West Haymarket Project that was formerly, but not currently, owned by BNSF and BNSF's predecessors-in-interest, including remediation costs beyond Nebraska Department of Environmental Quality Title 200 funds ("**Title 200 Funding**"); (iii) for claims arising out of work performed by City or its contractors pursuant to the provisions of this C&M Agreement, the Master Agreement, the Exchange Agreement, the Rights of Entry agreements, and the Exchange Agreement; and (iv) for claims arising out of continuing rights of City to enter onto property of BNSF, including work performed by City and City Contractors on such property of BNSF. Any lawful waiver of City's sovereign immunity herein shall be in addition to, and not in limitation of, any lawful waiver of City's sovereign immunity pursuant to the terms and provisions of the Master Agreement, the Exchange Agreement, and the Rights of Entry agreements.

3.8 Insurance Obligations.

3.8.1 During the Development Period, City shall, at its sole cost and expense, procure and maintain the following insurance:

3.8.1.1 Commercial General Liability Insurance. This insurance shall contain broad form contractual liability in an amount of at least $25,000,000 per occurrence and an aggregate limit of $50,000,000, but in no event less than the amount otherwise carried by City. Coverage must be purchased on a post 1998 ISO occurrence form or equivalent and include coverage for, but not limited to, the following:

- Bodily Injury and Property Damage
- Personal Injury and Advertising Injury
- Fire legal liability
- Products and completed operations

This policy shall also contain the following endorsements, which shall be indicated on the certificate of insurance:

- The definition of insured contract shall be amended to remove any exclusion or other limitation for any work being done within 50 feet of railroad property.
- Waiver of subrogation in favor of and acceptable to Railroad.
- Additional insured endorsement in favor of and acceptable to Railroad
- Separation of insureds.
- The policy shall be primary and non-contributing with respect to any insurance carried by Railroad.

It is agreed that the workers' compensation and employers' liability related exclusions in the Commercial General Liability insurance policy(s) required herein are intended to apply to employees of the policy holder and shall not apply to Railroad employees.

3.8.1.2 Business Automobile Insurance. This insurance shall contain a combined single limit of at least $1,000,000 per occurrence, and include coverage for, but not limited to the following:

- Bodily injury and property damage
- Any and all vehicles owned, used or hired

This policy shall also contain the following endorsements or language, which shall be indicated on the certificate of insurance:

- Waiver of subrogation in favor of and acceptable to Railroad.
- Additional insured endorsement in favor or and acceptable to Railroad.
- Separation of insureds.
- The policy shall be primary and non-contributing with respect to any insurance carried by Railroad.

3.8.1.3 Workers' Compensation and Employers' Liability Insurance. This insurance shall include coverage for, but not limited to:

- City's statutory liability under the workers' compensation laws of the *state(s) in which the work is to be performed. If optional under State law,* the insurance must cover all employees anyway.
- Employers' Liability (Part B) with limits of at least $500,000 each accident, $500,000 by disease policy limit, $500,000 by disease each employee.

This policy shall also contain the following endorsements or language, which shall be indicated on the certificate of insurance:

- Waiver of subrogation in favor of and acceptable to Railroad.

3.8.1.4 Railroad Protective Liability Insurance. This insurance shall name only the Railroad as the Insured with coverage of at least $5,000,000.00 per occurrence and $10,000,000.00 in the aggregate. The policy shall be issued on a standard ISO form CG 00 35 10 93 and include the following:

- Endorsed to include the Pollution Exclusion Amendment (ISO form CG 28 31 10 93)
- Endorsed to include the Limited Seepage and Pollution Endorsement.
- *Endorsed to remove any exclusion for punitive damages.*
- No other endorsements restricting coverage may be added.
- The original policy must be provided to Railroad prior to performing any work or services under this C&M Agreement

In lieu of providing a Railroad Protective Liability Policy, City may participate in BNSF's Blanket Railroad Protective Liability Insurance Policy available to City and City Contractors.

3.8.1.5 Other Requirements:

All policies (applying to coverage listed above) must not contain an exclusion for punitive damages and certificates of insurance must reflect that no exclusion exists.

City agrees to waive its right of recovery against Railroad for all claims and suits against Railroad, except for claims and suits arising wholly out of the sole negligence, or to the extent caused by the gross negligence or willful misconduct, of Railroad. In addition, its insurers, through the terms of the policy or policy endorsement, waive their right of subrogation against Railroad for all claims and suits, except for claims and suits arising wholly out of the sole negligence, or to the extent caused by the gross negligence or willful misconduct, of Railroad. The certificate of insurance must reflect the waiver of subrogation endorsement. City further waives its right of recovery, and its insurers also waive their right of subrogation against Railroad for loss of its owned or leased property or property under City's care, custody or control, except for rights of recovery and rights of subrogation arising wholly out of the sole negligence, or to the extent caused by the gross negligence or willful misconduct, of Railroad.

City is allowed to self-insure up to $250,000 per occurrence and $250,000 aggregate on General Liability and Automotive Liability and up to $500,000 per occurrence and $500,000 aggregate on Worker's Compensation Liability without the prior written consent of Railroad. Any deductible, self-insured retention or other financial responsibility for claims must be covered directly by City in lieu of insurance. Any and all Railroad Liabilities that would otherwise, in accordance with the provisions

of this C&M Agreement, be covered by insurance will be covered as if City elected not to include a deductible, self-insured retention or other financial responsibility for claims.

Prior to commencing the City C&M Work, City must furnish to Railroad acceptable certificate(s) of insurance including an original signature of the authorized representative evidencing the required coverage, endorsements, and amendments. The policy(ies) must contain a provision that obligates the insurance company(ies) issuing such policy(ies) to notify Railroad in writing at least 30 days prior to any cancellation, non-renewal, substitution or material alteration. This cancellation provision must be indicated on the certificate of insurance. Upon request from Railroad, a certified duplicate original of any required policy must be furnished. Certificate(s) should be sent to the following address:

Ebix BPO
PO Box 12010-BN
Hemet, CA 92546-8010
Fax number: 951-652-2882
Email: bnsf@ebix.com

Upon notification to BNSF of cancellation, non-renewal, substitution or material alteration of any such policy(ies), BNSF shall have the option to (i) if feasible, pay, on behalf of the City, any and all such premiums, penalties, fees or expenses necessary to keep such policy(ies) in full force and effect; or (ii) in the event that such policy(ies) cannot be kept in full force and effect, enter into the open market and procure such policy(ies) of insurance on behalf of City as required by this C&M Agreement at the then-current market rate. Upon any of the above occurrences, BNSF shall invoice the City for reimbursement of all such premiums, penalties, fees or expenses advanced on City's behalf plus an additional fifteen (15%) of such advanced amounts as remuneration for BNSF's overhead. Such amounts advanced by BNSF shall be paid by City within thirty (30) days after delivery of a statement for such expense. Any insurance policy must be written by a reputable insurance company reasonably acceptable to Railroad or with a current Best's Guide Rating of A- and Class VII or better, and authorized to do business in the state(s) in which the service is to be provided.

City represents that this C&M Agreement has been thoroughly reviewed by its insurance agent(s)/broker(s), who have been instructed by City to procure the insurance coverage required by this C&M Agreement. Allocated Loss Expense must be in addition to all policy limits for coverages referenced above. City represents that it understands and its insurance agent(s)/broker(s) have been informed that the City's insurance coverage being procured by City herein is to protect, defend, indemnify and hold harmless BNSF from any and all Liabilities, as such term is defined herein, that may arise in connection with this C&M Agreement and City, to the fullest extent allowed by law, waives its sovereign and municipal immunity and any caps or limitations on legal liability that may result therefrom.

Not more frequently than once every five years, Railroad may reasonably modify the required insurance coverage to reflect then-current risk management practices in the railroad industry and underwriting practices in the insurance industry.

If any portion of the operation is to be subcontracted by City, City must require that City Contractors provide and maintain the insurance coverages set forth herein, naming Railroad as an additional insured; provided, however, that policy limits for Commercial General Liability Insurance may be reduced to $5,000,000 per occurrence and an aggregate limit of $10,000,000, but in no event less than the amount otherwise carried by the City Contractor. In addition, City must require that City Contractor release, defend and indemnify Railroad to the same extent and under the same terms and conditions as City is required to release, defend and indemnify Railroad herein.

Failure to provide evidence as required by this **Section 3.8** will entitle, but not require, Railroad to immediately suspend, until such default is cured, any and/or all work under this C&M Agreement, including without limitation: (i) BNSF Work, (ii) City C&M Work, and (iii) any other work on or affecting any BNSF property, subject to termination as provided in the Master Agreement. Acceptance of a certificate that does not comply with this section will not operate as a waiver of City's obligations hereunder.

The fact that insurance (including, without limitation, self-insurance) is obtained by City will not be deemed to release or diminish the liability of City including, without limitation, liability under the indemnity provisions of this C&M Agreement. Damages recoverable by Railroad will not be limited by the amount of the required insurance coverage.

For purposes of this **Section 3.8**, Railroad means "Burlington Northern Santa Fe, LLC", "BNSF Railway Company" and the subsidiaries, successors, assigns and affiliates of each.

3.8.2 During the Post-Development Period (as defined in the Master Agreement), City shall, and shall require City Contractors to, at City's sole cost and expense, procure and maintain the insurance coverages listed in the applicable Rights of Entry, continuing thereafter so long as the C&M Agreement and/or any Right of Entry agreement is in effect.

3.9 Adherence to Timeline. City must require City Contractors to reasonably adhere to the Timeline. The Parties mutually agree that BNSF's failure to complete the BNSF Work in accordance with *the Timeline due to inclement weather or unforeseen railroad emergencies will not constitute a breach of* this C&M Agreement by BNSF and will not subject BNSF to any liability. Regardless of the requirements of the Timeline, BNSF reserves the right to reallocate the labor forces assigned to complete the BNSF Work in the event of an emergency to provide for the immediate restoration of railroad operations (BNSF or its related railroads) or to protect persons or property on or near any BNSF owned property. BNSF will not be liable for any additional costs or expenses resulting from any such reallocation of its labor forces. The Parties mutually agree that any reallocation of labor forces by BNSF pursuant to this provision and any direct or indirect consequences or costs resulting from any such reallocation will not constitute a breach of this C&M Agreement by BNSF.

ARTICLE IV – MISCELLANEOUS

4.1 Any books, papers, receipts, and accounts of the Parties relating to the City C&M Work and the BNSF Additional City Cost Work will at all reasonable times and upon reasonable prior written notice be open to inspection and audit by the agents and authorized representatives of the Parties for a period of one (1) year after the date of the final disbursement from the Escrow Account.

4.2 The terms and conditions of indemnification and liability provisions of **Sections 3.6** and **3.7** shall survive expiration or termination of this C&M Agreement, the Master Agreement and the Exchange Agreement, and all Closings under the Exchange Agreement.

4.3 The covenants and provisions of this C&M Agreement are binding upon and inure to the benefit of the successors and assigns of the Parties. Notwithstanding the preceding sentence, neither Party may assign its rights and obligations hereunder without the prior written consent of the other Party. Any permitted assignment shall not terminate the liability of the assigning Party, unless a specific release of such liability in writing is given and signed by the other Party. Notwithstanding any contrary provision herein; City shall have the right to assign this C&M Agreement to the West Haymarket Joint Public Agency, a Nebraska joint public agency ("**JPA**") without further consent of BNSF provided (i) City delivers prior written notification to BNSF of the assignment, (ii) City and JPA enters into BNSF's then-standard Consent to Assignment form, pursuant to which City will remain jointly and severally liable for all of City's obligations hereunder, including without limitation City's liability and indemnification obligations; provided that BNSF agrees it will first send any claim or notice of default to JPA and will not pursue any action against City until thirty (30) days after the date of such claim or notice to JPA, unless failure to pursue action against City during such time would otherwise prejudice BNSF's rights, and (iii) City's entire interest under the Master Agreement, the Exchange Agreement, and all Rights of Entry agreements are assigned at the same time to JPA.

4.4 This C&M Agreement shall be in effect for so long as the Master Agreement and/or any Right of Entry is in effect; provided, however, that if the Master Agreement and all Rights of Entry have expired or been terminated, BNSF has the right to terminate this C&M Agreement upon written notice to City.

4.5 Neither termination nor expiration of this C&M Agreement will release either Party from any liability or obligation under this C&M Agreement, whether of indemnity or otherwise, resulting from any acts, omissions or events happening prior to the date of termination or expiration.

4.6 Any notice required or permitted to be given hereunder by one Party to the other shall be in writing and the same shall be given and shall be deemed to have been served and given if: (i) placed in the United States mail, certified, return receipt requested, or (ii) deposited into the custody of a nationally recognized overnight delivery service, addressed to the Party to be notified at the address for such Party specified below, or to such other address as the Party to be notified may designate by giving the other Party no less than thirty (30) days' advance written notice of such change in address.

If to BNSF: BNSF Railway Company
P.O. Box 961034
Fort Worth, TX 76161-0034.
Attn: Robert J. Boileau, P.E., Assistant Vice President, Engineering Services

If to City: City of Lincoln, Nebraska
555 South 10th Street
Lincoln, NE 68508
Attn: City Attorney

4.7 Time is of the essence of this C&M Agreement.

4.8 In any action (declaratory or otherwise) brought by either Party in connection with or arising out of the terms of this C&M Agreement, the prevailing Party in such action will be entitled to recover from the non-prevailing Party all actual costs, actual damages, and actual expenses, including, without limitation, reasonable attorneys' fees and charges to the fullest extent permitted by law.

4.9 Each Party and its counsel have reviewed and revised this C&M Agreement. The Parties agree that the rule of construction that any ambiguities are to be resolved against the drafting Party must not be employed to interpret this C&M Agreement or its amendments or exhibits.

4.10 If any clause or provision of this C&M Agreement is illegal, invalid or unenforceable under present or future laws effective during the term of this C&M Agreement, then and in that event, it is the intention of the Parties that the remainder of this C&M Agreement shall not be affected thereby, and it is also the intention of the Parties that in lieu of each clause or provision of this C&M Agreement that is illegal, invalid or unenforceable, there be added, as a part of this C&M Agreement, a clause or provision as similar in terms to such illegal, invalid or unenforceable clause or provision as may be possible and be legal, valid and enforceable.

4.11 This C&M Agreement, the Master Agreement, the Exchange Agreement, and, to the extent executed, the Right of Entry licenses and/or easements described herein, contain the entire agreement between BNSF and City with respect to the West Haymarket Project. Oral statements or prior written matters not specifically incorporated into this C&M Agreement are superseded hereby. No variation, modification, or change to this C&M Agreement, the Exchange Agreement or the Rights of Entry agreements shall bind either Party unless set forth in a document signed by both Parties. No failure or delay of either Party in exercising any right, power or privilege hereunder shall operate as a waiver of such Party's right to require strict compliance with any term of this C&M Agreement. The captions next to the section numbers of this C&M Agreement are for reference only and do not modify or affect this C&M Agreement.

4.12 No director, officer, elected or appointed official, or employee of either of the Parties shall be personally liable in the event of any default.

4.13 This C&M Agreement may be executed in more than one counterpart, including facsimile transmissions, each of which shall be deemed an original.

4.14 As of this same Effective Date, City and BNSF have also entered into the Master Agreement, the Exchange Agreement and to the extent executed, certain Right of Entry licenses and/or easements. After the Effective Date and upon completion of additional design work, City and BNSF expect to execute other Right of Entry licenses and/or easements. City and BNSF agree that, except as otherwise stated in **Article 1** of this C&M Agreement: (i) in the event the terms of the Master Agreement and the terms of the C&M Agreement, the Exchange Agreement and the various licenses and/or easements are inconsistent, then the Master Agreement shall prevail; (ii) in the event the terms of the Exchange Agreement and the terms of the C&M Agreement and the various licenses and/or easements are inconsistent, then the Exchange Agreement shall prevail, and (iii) in the event the terms of the C&M Agreement and the various licenses and/or easements are inconsistent, then the C&M Agreement shall prevail.

4.15 All aspects of this C&M Agreement shall be governed by the laws of the State of Nebraska.

4.16 To the fullest extent permitted by law any dispute arising under or in connection with this C&M Agreement or related to any subject matter which is the subject of this C&M Agreement shall be subject to the sole and exclusive jurisdiction of the United States District Court for the District of Nebraska. The aforementioned choice of venue is intended by the Parties to be mandatory and not permissive. Each Party hereby irrevocably consents to the jurisdiction of the United States District Court for the District of Nebraska in any such dispute and irrevocably waives, to the fullest extent permitted by law, any objection that it may now have or hereafter have to the laying of venue in such court and that any such dispute which is brought in such court has been brought in an inconvenient forum.

4.17 By signing below, the Parties affirm they have the legal authority to enter into this C&M Agreement.

4.18 Each Party will, whenever it shall be reasonably requested to do so by the other, promptly execute, acknowledge, and deliver, or cause to be executed, acknowledged, or delivered, any and all such reasonable further confirmations, instruments, or further assurances and consents as may be reasonably necessary or proper in order to effectuate the covenants and agreements herein provided. Each Party shall reasonably cooperate in good faith with the other and shall do any and all other acts and execute, acknowledge and deliver any and all documents so reasonably requested in order to satisfy the conditions set forth herein and carry out the intent and purposes of this C&M Agreement.

[*Signature page follows*]

Signature Page - C&M Agreement

IN WITNESS WHEREOF, the Parties have caused this C&M Agreement to be executed as of the date below each Party's signature; to be effective, however, as of the Effective Date above.

CITY OF LINCOLN, NEBRASKA, a Nebraska municipal corporation

By: _____
Chris Beutler, Mayor of Lincoln

Date: 10/19/2010

BNSF RAILWAY COMPANY, a Delaware corporation

By: _____
David L. Freeman, Vice President – Engineering

Date: _____

Signature Page - C&M Agreement

IN WITNESS WHEREOF, the Parties have caused this C&M Agreement to be executed as of the date below each Party's signature; to be effective, however, as of the Effective Date above.

CITY OF LINCOLN, NEBRASKA, a Nebraska municipal corporation

By: _____
Chris Beutler, Mayor of Lincoln

Date: _____

BNSF RAILWAY COMPANY, a Delaware corporation

By: _____
David L. Freeman, Vice President – Engineering

Date: _____

EXHIBIT A

Project Area

[See attached]

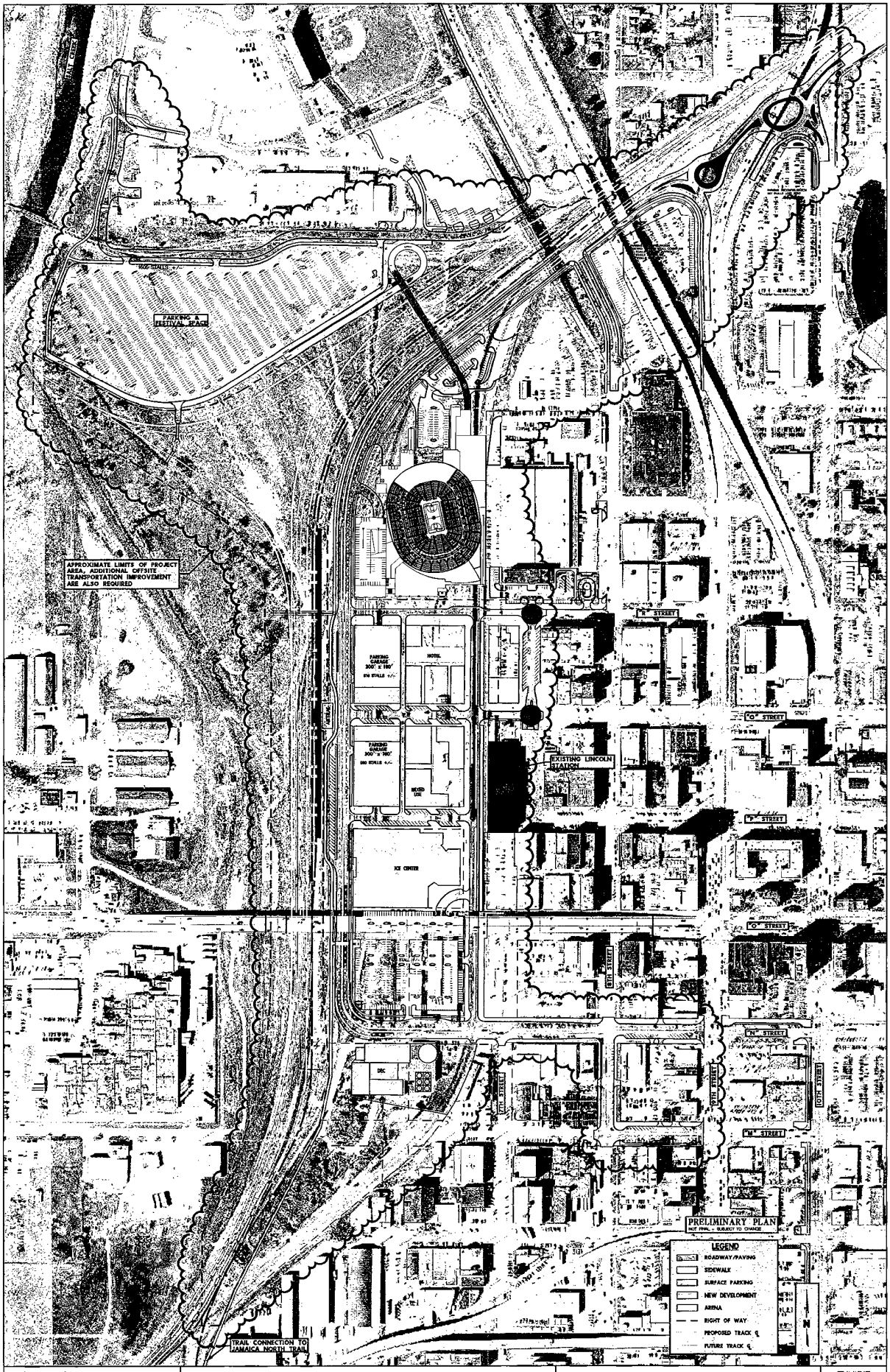
PARKING & FESTIVAL SPACE
APPROXIMATE LIMITS OF PROJECT AREA; ADDITIONAL OFFSITE TRANSPORTATION IMPROVEMENT ARE ALSO REQUIRED
PARKING GARAGE 300' x 180' 816 STALLS +/-
HOTEL
PARKING GARAGE 300' x 180' 360 STALLS +/-
MIXED USE
ICE CENTER
EXISTING LINCOLN STADIUM
"N" STREET
"O" STREET
"P" STREET
"Q" STREET
"R" STREET
"S" STREET
"T" STREET
"U" STREET
"V" STREET
"W" STREET
"X" STREET
"Y" STREET
"Z" STREET
"AA" STREET
"BB" STREET
"CC" STREET
"DD" STREET
"EE" STREET
"FF" STREET
"GG" STREET
"HH" STREET
"II" STREET
"JJ" STREET
"KK" STREET
"LL" STREET
"MM" STREET
"NN" STREET
"OO" STREET
"PP" STREET
"QQ" STREET
"RR" STREET
"SS" STREET
"TT" STREET
"UU" STREET
"VV" STREET
"WW" STREET
"XX" STREET
"YY" STREET
"ZZ" STREET
"AAA" STREET
"BBB" STREET
"CCC" STREET
"DDD" STREET
"EEE" STREET
"FFF" STREET
"GGG" STREET
"HHH" STREET
"III" STREET
"JJJ" STREET
"KKK" STREET
"LLL" STREET
"MMM" STREET
"NNN" STREET
"OOO" STREET
"PPP" STREET
"QQQ" STREET
"RRR" STREET
"SSS" STREET
"TTT" STREET
"UUU" STREET
"VVV" STREET
"WWW" STREET
"XXX" STREET
"YYY" STREET
"ZZZ" STREET
"AAAA" STREET
"BBBB" STREET
"CCCC" STREET
"DDDD" STREET
"EEEE" STREET
"FFFF" STREET
"GGGG" STREET
"HHHH" STREET
"IIII" STREET
"JJJJ" STREET
"KKKK" STREET
"LLLL" STREET
"MMMM" STREET
"NNNN" STREET
"OOOO" STREET
"PPPP" STREET
"QQQQ" STREET
"RRRR" STREET
"SSSS" STREET
"TTTT" STREET
"UUUU" STREET
"VVVV" STREET
"WWWW" STREET
"XXXX" STREET
"YYYY" STREET
"ZZZZ" STREET
"AAAAA" STREET
"BBBBB" STREET
"CCCCC" STREET
"DDDDD" STREET
"EEEEE" STREET
"FFFFF" STREET
"GGGGG" STREET
"HHHHH" STREET
"IIIII" STREET
"JJJJJ" STREET
"KKKKK" STREET
"LLLLL" STREET
"MMMMM" STREET
"NNNNN" STREET
"OOOOO" STREET
"PPPPP" STREET
"QQQQQ" STREET
"RRRRR" STREET
"SSSSS" STREET
"TTTTT" STREET
"UUUUU" STREET
"VVVVV" STREET
"WWWWW" STREET
"XXXXX" STREET
"YYYYY" STREET
"ZZZZZ" STREET
"AAAAAA" STREET
"BBBBBB" STREET
"CCCCCC" STREET
"DDDDDD" STREET
"EEEEEE" STREET
"FFFFFF" STREET
"GGGGGG" STREET
"HHHHHH" STREET
"IIIIII" STREET
"JJJJJJ" STREET
"KKKKKK" STREET
"LLLLLL" STREET
"MMMMMM" STREET
"NNNNNN" STREET
"OOOOOO" STREET
"PPPPPP" STREET
"QQQQQQ" STREET
"RRRRRR" STREET
"SSSSSS" STREET
"TTTTTT" STREET
"UUUUUU" STREET
"VVVVVV" STREET
"WWWWWW" STREET
"XXXXXX" STREET
"YYYYYY" STREET
"ZZZZZZ" STREET
"AAAAAAA" STREET
"BBBBBBB" STREET
"CCCCCCC" STREET
"DDDDDDD" STREET
"EEEEEEE" STREET
"FFFFFFF" STREET
"GGGGGGG" STREET
"HHHHHHH" STREET
"IIIIIII" STREET
"JJJJJJJ" STREET
"KKKKKKK" STREET
"LLLLLLL" STREET
"MMMMMMM" STREET
"NNNNNNN" STREET
"OOOOOOO" STREET
"PPPPPPP" STREET
"QQQQQQQ" STREET
"RRRRRRR" STREET
"SSSSSSS" STREET
"TTTTTTT" STREET
"UUUUUUU" STREET
"VVVVVVV" STREET
"WWWWWWW" STREET
"XXXXXXX" STREET
"YYYYYYY" STREET
"ZZZZZZZ" STREET
"AAAAAAAA" STREET
"BBBBBBBB" STREET
"CCCCCCCC" STREET
"DDDDDDDD" STREET
"EEEEEEEE" STREET
"FFFFFFFF" STREET
"GGGGGGGG" STREET
"HHHHHHHH" STREET
"IIIIIIII" STREET
"JJJJJJJJ" STREET
"KKKKKKKK" STREET
"LLLLLLLL" STREET
"MMMMMMMM" STREET
"NNNNNNNN" STREET
"OOOOOOOO" STREET
"PPPPPPPP" STREET
"QQQQQQQQ" STREET
"RRRRRRRR" STREET
"SSSSSSSS" STREET
"TTTTTTTT" STREET
"UUUUUUUU" STREET
"VVVVVVVV" STREET
"WWWWWWWW" STREET
"XXXXXXXX" STREET
"YYYYYYYY" STREET
"ZZZZZZZZ" STREET
"AAAAAAAAA" STREET
"BBBBBBBBB" STREET
"CCCCCCCCC" STREET
"DDDDDDDDD" STREET
"EEEEEEEEE" STREET
"FFFFFFFFF" STREET
"GGGGGGGGG" STREET
"HHHHHHHHH" STREET
"IIIIIIIII" STREET
"JJJJJJJJJ" STREET
"KKKKKKKKK" STREET
"LLLLLLLLL" STREET
"MMMMMMMMM" STREET
"NNNNNNNNN" STREET
"OOOOOOOOO" STREET
"PPPPPPPPP" STREET
"QQQQQQQQQ" STREET
"RRRRRRRRR" STREET
"SSSSSSSSS" STREET
"TTTTTTTTT" STREET
"UUUUUUUUU" STREET
"VVVVVVVVV" STREET
"WWWWWWWWW" STREET
"XXXXXXXXX" STREET
"YYYYYYYYY" STREET
"ZZZZZZZZZ" STREET
"AAAAAAAAAA" STREET
"BBBBBBBBBB" STREET
"CCCCCCCCCC" STREET
"DDDDDDDDDD" STREET
"EEEEEEEEEE" STREET
"FFFFFFFFFF" STREET
"GGGGGGGGGG" STREET
"HHHHHHHHHH" STREET
"IIIIIIIIII" STREET
"JJJJJJJJJJ" STREET
"KKKKKKKKKK" STREET
"LLLLLLLLLL" STREET
"MMMMMMMMMM" STREET
"NNNNNNNNNN" STREET
"OOOOOOOOOO" STREET
"PPPPPPPPPP" STREET
"QQQQQQQQQQ" STREET
"RRRRRRRRRR" STREET
"SSSSSSSSSS" STREET
"TTTTTTTTTT" STREET
"UUUUUUUUUU" STREET
"VVVVVVVVVV" STREET
"WWWWWWWWWW" STREET
"XXXXXXXXXX" STREET
"YYYYYYYYYY" STREET
"ZZZZZZZZZZ" STREET
"AAAAAAAAAAA" STREET
"BBBBBBBBBBB" STREET
"CCCCCCCCCCC" STREET
"DDDDDDDDDDD" STREET
"EEEEEEEEEEE" STREET
"FFFFFFFFFFF" STREET
"GGGGGGGGGGG" STREET
"HHHHHHHHHHH" STREET
"IIIIIIIIIII" STREET
"JJJJJJJJJJJ" STREET
"KKKKKKKKKKK" STREET
"LLLLLLLLLLL" STREET
"MMMMMMMMMMM" STREET
"NNNNNNNNNNN" STREET
"OOOOOOOOOOO" STREET
"PPPPPPPPPPP" STREET
"QQQQQQQQQQQ" STREET
"RRRRRRRRRRR" STREET
"SSSSSSSSSSS" STREET
"TTTTTTTTTTT" STREET
"UUUUUUUUUUU" STREET
"VVVVVVVVVVV" STREET
"WWWWWWWWWWW" STREET
"XXXXXXXXXXX" STREET
"YYYYYYYYYYY" STREET
"ZZZZZZZZZZZ" STREET
"AAAAAAAAAAAA" STREET
"BBBBBBBBBBBB" STREET
"CCCCCCCCCCCC" STREET
"DDDDDDDDDDDD" STREET
"EEEEEEEEEEEE" STREET
"FFFFFFFFFFFF" STREET
"GGGGGGGGGGGG" STREET
"HHHHHHHHHHHH" STREET
"IIIIIIIIIIII" STREET
"JJJJJJJJJJJJ" STREET
"KKKKKKKKKKKK" STREET
"LLLLLLLLLLLL" STREET
"MMMMMMMMMMMM" STREET
"NNNNNNNNNNNN" STREET
"OOOOOOOOOOOO" STREET
"PPPPPPPPPPPP" STREET
"QQQQQQQQQQQQ" STREET
"RRRRRRRRRRRR" STREET
"SSSSSSSSSSSS" STREET
"TTTTTTTTTTTT" STREET
"UUUUUUUUUUUU" STREET
"VVVVVVVVVVVV" STREET
"WWWWWWWWWWWW" STREET
"XXXXXXXXXXXX" STREET
"YYYYYYYYYYYY" STREET
"ZZZZZZZZZZZZ" STREET
"AAAAAAAAAAAAA" STREET
"BBBBBBBBBBBBB" STREET
"CCCCCCCCCCCCC" STREET
"DDDDDDDDDDDDD" STREET
"EEEEEEEEEEEEE" STREET
"FFFFFFFFFFFFF" STREET
"GGGGGGGGGGGGG" STREET
"HHHHHHHHHHHHH" STREET
"IIIIIIIIIIIII" STREET
"JJJJJJJJJJJJJ" STREET
"KKKKKKKKKKKKK" STREET
"LLLLLLLLLLLLL" STREET
"MMMMMMMMMMMMM" STREET
"NNNNNNNNNNNNN" STREET
"OOOOOOOOOOOOO" STREET
"PPPPPPPPPPPPP" STREET
"QQQQQQQQQQQQQ" STREET
"RRRRRRRRRRRRR" STREET
"SSSSSSSSSSSSS" STREET
"TTTTTTTTTTTTT" STREET
"UUUUUUUUUUUUU" STREET
"VVVVVVVVVVVVV" STREET
"WWWWWWWWWWWWW" STREET
"XXXXXXXXXXXXX" STREET
"YYYYYYYYYYYYY" STREET
"ZZZZZZZZZZZZZ" STREET
"AAAAAAAAAAAAAA" STREET
"BBBBBBBBBBBBBB" STREET
"CCCCCCCCCCCCCC" STREET
"DDDDDDDDDDDDDD" STREET
"EEEEEEEEEEEEEE" STREET
"FFFFFFFFFFFFFF" STREET
"GGGGGGGGGGGGGG" STREET
"HHHHHHHHHHHHHH" STREET
"IIIIIIIIIIIIII" STREET
"JJJJJJJJJJJJJJ" STREET
"KKKKKKKKKKKKKK" STREET
"LLLLLLLLLLLLLL" STREET
"MMMMMMMMMMMMMM" STREET
"NNNNNNNNNNNNNN" STREET
"OOOOOOOOOOOOOO" STREET
"PPPPPPPPPPPPPP" STREET
"QQQQQQQQQQQQQQ" STREET
"RRRRRRRRRRRRRR" STREET
"SSSSSSSSSSSSSS" STREET
"TTTTTTTTTTTTTT" STREET
"UUUUUUUUUUUUUU" STREET
"VVVVVVVVVVVVVV" STREET
"WWWWWWWWWWWWWW" STREET
"XXXXXXXXXXXXXX" STREET
"YYYYYYYYYYYYYY" STREET
"ZZZZZZZZZZZZZZ" STREET
"AAAAAAAAAAAAAAA" STREET
"BBBBBBBBBBBBBBB" STREET
"CCCCCCCCCCCCCCC" STREET
"DDDDDDDDDDDDDDD" STREET
"EEEEEEEEEEEEEEE" STREET
"FFFFFFFFFFFFFFF" STREET
"GGGGGGGGGGGGGGG" STREET
"HHHHHHHHHHHHHHH" STREET
"IIIIIIIIIIIIIII" STREET
"JJJJJJJJJJJJJJJ" STREET
"KKKKKKKKKKKKKKK" STREET
"LLLLLLLLLLLLLLL" STREET
"MMMMMMMMMMMMMMM" STREET
"NNNNNNNNNNNNNNN" STREET
"OOOOOOOOOOOOOOO" STREET
"PPPPPPPPPPPPPPP" STREET
"QQQQQQQQQQQQQQQ" STREET
"RRRRRRRRRRRRRRR" STREET
"SSSSSSSSSSSSSSS" STREET
"TTTTTTTTTTTTTTT" STREET
"UUUUUUUUUUUUUUU" STREET
"VVVVVVVVVVVVVVV" STREET
"WWWWWWWWWWWWWWW" STREET
"XXXXXXXXXXXXXXX" STREET
"YYYYYYYYYYYYYYY" STREET
"ZZZZZZZZZZZZZZZ" STREET
"AAAAAAAAAAAAAAAA" STREET
"BBBBBBBBBBBBBBBB" STREET
"CCCCCCCCCCCCCCCC" STREET
"DDDDDDDDDDDDDDDD" STREET
"EEEEEEEEEEEEEEEE" STREET
"FFFFFFFFFFFFFFFF" STREET
"GGGGGGGGGGGGGGGG" STREET
"HHHHHHHHHHHHHHHH" STREET
"IIIIIIIIIIIIIIII" STREET
"JJJJJJJJJJJJJJJJ" STREET
"KKKKKKKKKKKKKKKK" STREET
"LLLLLLLLLLLLLLLL" STREET
"MMMMMMMMMMMMMMMM" STREET
"NNNNNNNNNNNNNNNN" STREET
"OOOOOOOOOOOOOOOO" STREET
"PPPPPPPPPPPPPPPP" STREET
"QQQQQQQQQQQQQQQQ" STREET
"RRRRRRRRRRRRRRRR" STREET
"SSSSSSSSSSSSSSSS" STREET
"TTTTTTTTTTTTTTTT" STREET
"UUUUUUUUUUUUUUUU" STREET
"VVVVVVVVVVVVVVVV" STREET
"WWWWWWWWWWWWWWWW" STREET
"XXXXXXXXXXXXXXXX" STREET
"YYYYYYYYYYYYYYYY" STREET
"ZZZZZZZZZZZZZZZZ" STREET
"AAAAAAAAAAAAAAAAA" STREET
"BBBBBBBBBBBBBBBBB" STREET
"CCCCCCCCCCCCCCCCC" STREET
"DDDDDDDDDDDDDDDDD" STREET
"EEEEEEEEEEEEEEEEE" STREET
"FFFFFFFFFFFFFFFFF" STREET
"GGGGGGGGGGGGGGGGG" STREET
"HHHHHHHHHHHHHHHHH" STREET
"IIIIIIIIIIIIIIIII" STREET
"JJJJJJJJJJJJJJJJJ" STREET
"KKKKKKKKKKKKKKKKK" STREET
"LLLLLLLLLLLLLLLLL" STREET
"MMMMMMMMMMMMMMMMM" STREET
"NNNNNNNNNNNNNNNNN" STREET
"OOOOOOOOOOOOOOOOO" STREET
"PPPPPPPPPPPPPPPPP" STREET
"QQQQQQQQQQQQQQQQQ" STREET
"RRRRRRRRRRRRRRRRR" STREET
"SSSSSSSSSSSSSSSSS" STREET
"TTTTTTTTTTTTTTTTT" STREET
"UUUUUUUUUUUUUUUUU" STREET
"VVVVVVVVVVVVVVVVV" STREET
"WWWWWWWWWWWWWWWWW" STREET
"XXXXXXXXXXXXXXXXX" STREET
"YYYYYYYYYYYYYYYYY" STREET
"ZZZZZZZZZZZZZZZZZ" STREET
"AAAAAAAAAAAAAAAAAA" STREET
"BBBBBBBBBBBBBBBBBB" STREET
"CCCCCCCCCCCCCCCCCC" STREET
"DDDDDDDDDDDDDDDDDD" STREET
"EEEEEEEEEEEEEEEEEE" STREET
"FFFFFFFFFFFFFFFFFF" STREET
"GGGGGGGGGGGGGGGGGG" STREET
"HHHHHHHHHHHHHHHHHH" STREET
"IIIIIIIIIIIIIIIIII" STREET
"JJJJJJJJJJJJJJJJJJ" STREET
"KKKKKKKKKKKKKKKKKK" STREET
"LLLLLLLLLLLLLLLLLL" STREET
"MMMMMMMMMMMMMMMMMM" STREET
"NNNNNNNNNNNNNNNNNN" STREET
"OOOOOOOOOOOOOOOOOO" STREET
"PPPPPPPPPPPPPPPPPP" STREET
"QQQQQQQQQQQQQQQQQQ" STREET
"RRRRRRRRRRRRRRRRRR" STREET
"SSSSSSSSSSSSSSSSSS" STREET
"TTTTTTTTTTTTTTTTTT" STREET
"UUUUUUUUUUUUUUUUUU" STREET
"VVVVVVVVVVVVVVVVVV" STREET
"WWWWWWWWWWWWWWWWWW" STREET
"XXXXXXXXXXXXXXXXXX" STREET
"YYYYYYYYYYYYYYYYYY" STREET
"ZZZZZZZZZZZZZZZZZZ" STREET
"AAAAAAAAAAAAAAAAAAA" STREET
"BBBBBBBBBBBBBBBBBBB" STREET
"CCCCCCCCCCCCCCCCCCC" STREET
"DDDDDDDDDDDDDDDDDDD" STREET
"EEEEEEEEEEEEEEEEEEE" STREET
"FFFFFFFFFFFFFFFFFFF" STREET
"GGGGGGGGGGGGGGGGGGG" STREET
"HHHHHHHHHHHHHHHHHHH" STREET
"IIIIIIIIIIIIIIIIIII" STREET
"JJJJJJJJJJJJJJJJJJJ" STREET
"KKKKKKKKKKKKKKKKKKK" STREET
"LLLLLLLLLLLLLLLLLLL" STREET
"MMMMMMMMMMMMMMMMMMM" STREET
"NNNNNNNNNNNNNNNNNNN" STREET
"OOOOOOOOOOOOOOOOOOO" STREET
"PPPPPPPPPPPPPPPPPPP" STREET
"QQQQQQQQQQQQQQQQQQQ" STREET
"RRRRRRRRRRRRRRRRRRR" STREET
"SSSSSSSSSSSSSSSSSSS" STREET
"TTTTTTTTTTTTTTTTTTT" STREET
"UUUUUUUUUUUUUUUUUUU" STREET
"VVVVVVVVVVVVVVVVVVV" STREET
"WWWWWWWWWWWWWWWWWWW" STREET
"XXXXXXXXXXXXXXXXXXX" STREET
"YYYYYYYYYYYYYYYYYYY" STREET
"ZZZZZZZZZZZZZZZZZZZ" STREET
"AAAAAAAAAAAAAAAAAAAA" STREET
"BBBBBBBBBBBBBBBBBBBB" STREET
"CCCCCCCCCCCCCCCCCCCC" STREET
"DDDDDDDDDDDDDDDDDDDD" STREET
"EEEEEEEEEEEEEEEEEEEE" STREET
"FFFFFFFFFFFFFFFFFFFF" STREET
"GGGGGGGGGGGGGGGGGGGG" STREET
"HHHHHHHHHHHHHHHHHHHH" STREET
"IIIIIIIIIIIIIIIIIIII" STREET
"JJJJJJJJJJJJJJJJJJJJ" STREET
"KKKKKKKKKKKKKKKKKKKK" STREET
"LLLLLLLLLLLLLLLLLLLL" STREET
"MMMMMMMMMMMMMMMMMMMM" STREET
"NNNNNNNNNNNNNNNNNNNN" STREET
"OOOOOOOOOOOOOOOOOOOO" STREET
"PPPPPPPPPPPPPPPPPPPP" STREET
"QQQQQQQQQQQQQQQQQQQQ" STREET
"RRRRRRRRRRRRRRRRRRRR" STREET
"SSSSSSSSSSSSSSSSSSSS" STREET
"TTTTTTTTTTTTTTTTTTTT" STREET
"UUUUUUUUUUUUUUUUUUUU" STREET
"VVVVVVVVVVVVVVVVVVVV" STREET
"WWWWWWWWWWWWWWWWWWWW" STREET
"XXXXXXXXXXXXXXXXXXXX" STREET
"YYYYYYYYYYYYYYYYYYYY" STREET
"ZZZZZZZZZZZZZZZZZZZZ" STREET
"AAAAAAAAAAAAAAAAAAAAA" STREET
"BBBBBBBBBBBBBBBBBBBBB" STREET
"CCCCCCCCCCCCCCCCCCCCC" STREET
"DDDDDDDDDDDDDDDDDDDDD" STREET
"EEEEEEEEEEEEEEEEEEEEE" STREET
"FFFFFFFFFFFFFFFFFFFFF" STREET
"GGGGGGGGGGGGGGGGGGGGG" STREET
"HHHHHHHHHHHHHHHHHHHHH" STREET
"IIIIIIIIIIIIIIIIIIIII" STREET
"JJJJJJJJJJJJJJJJJJJJJ" STREET
"KKKKKKKKKKKKKKKKKKKKK" STREET
"LLLLLLLLLLLLLLLLLLLLL" STREET
"MMMMMMMMMMMMMMMMMMMMM" STREET
"NNNNNNNNNNNNNNNNNNNNN" STREET
"OOOOOOOOOOOOOOOOOOOOO" STREET
"PPPPPPPPPPPPPPPPPPPPP" STREET
"QQQQQQQQQQQQQQQQQQQQQ" STREET
"RRRRRRRRRRRRRRRRRRRRR" STREET
"SSSSSSSSSSSSSSSSSSSSS" STREET
"TTTTTTTTTTTTTTTTTTTTT" STREET
"UUUUUUUUUUUUUUUUUUUUU" STREET
"VVVVVVVVVVVVVVVVVVVVV" STREET
"WWWWWWWWWWWWWWWWWWWWW" STREET
"XXXXXXXXXXXXXXXXXXXXX" STREET
"YYYYYYYYYYYYYYYYYYYYY" STREET
"ZZZZZZZZZZZZZZZZZZZZZ" STREET
"AAAAAAAAAAAAAAAAAAAAAA" STREET
"BBBBBBBBBBBBBBBBBBBBBB" STREET
"CCCCCCCCCCCCCCCCCCCCCC" STREET
"DDDDDDDDDDDDDDDDDDDDDD" STREET
"EEEEEEEEEEEEEEEEEEEEEE" STREET
"FFFFFFFFFFFFFFFFFFFFFF" STREET
"GGGGGGGGGGGGGGGGGGGGGG" STREET
"HHHHHHHHHHHHHHHHHHHHHH" STREET
"IIIIIIIIIIIIIIIIIIIIII" STREET
"JJJJJJJJJJJJJJJJJJJJJJ" STREET
"KKKKKKKKKKKKKKKKKKKKKK" STREET
"LLLLLLLLLLLLLLLLLLLLLL" STREET
"MMMMMMMMMMMMMMMMMMMMMM" STREET
"NNNNNNNNNNNNNNNNNNNNNN" STREET
"OOOOOOOOOOOOOOOOOOOOOO" STREET
"PPPPPPPPPPPPPPPPPPPPPP" STREET
"QQQQQQQQQQQQQQQQQQQQQQ" STREET
"RRRRRRRRRRRRRRRRRRRRRR" STREET
"SSSSSSSSSSSSSSSSSSSSSS" STREET
"TTTTTTTTTTTTTTTTTTTTTT" STREET
"UUUUUUUUUUUUUUUUUUUUUU" STREET
"VVVVVVVVVVVVVVVVVVVVVV" STREET
"WWWWWWWWWWWWWWWWWWWWWW" STREET
"XXXXXXXXXXXXXXXXXXXXXX" STREET
"YYYYYYYYYYYYYYYYYYYYYY" STREET
"ZZZZZZZZZZZZZZZZZZZZZZ" STREET
"AAAAAAAAAAAAAAAAAAAAAAA" STREET
"BBBBBBBBBBBBBBBBBBBBBBB" STREET
"CCCCCCCCCCCCCCCCCCCCCCC" STREET
"DDDDDDDDDDDDDDDDDDDDDDD" STREET
"EEEEEEEEEEEEEEEEEEEEEEE" STREET
"FFFFFFFFFFFFFFFFFFFFFFF" STREET
"GGGGGGGGGGGGGGGGGGGGGGG" STREET
"HHHHHHHHHHHHHHHHHHHHHHH" STREET
"IIIIIIIIIIIIIIIIIIIIIII" STREET
"JJJJJJJJJJJJJJJJJJJJJJJ" STREET
"KKKKKKKKKKKKKKKKKKKKKKK" STREET
"LLLLLLLLLLLLLLLLLLLLLLL" STREET
"MMMMMMMMMMMMMMMMMMMMMMM" STREET
"NNNNNNNNNNNNNNNNNNNNNNN" STREET
"OOOOOOOOOOOOOOOOOOOOOOO" STREET
"PPPPPPPPPPPPPPPPPPPPPPP" STREET
"QQQQQQQQQQQQQQQQQQQQQQQ" STREET
"RRRRRRRRRRRRRRRRRRRRRRR" STREET
"SSSSSSSSSSSSSSSSSSSSSSS" STREET
"TTTTTTTTTTTTTTTTTTTTTTT" STREET
"UUUUUUUUUUUUUUUUUUUUUUU" STREET
"VV

EXHIBIT B

Form of BNSF Plan Approval

Gerald Maczuga
Project Engineer

BNSF Railway Company
201 N 7th St
Lincoln, NE 68508
402-458-7537 (office)
402-458-4376 (fax)
Gerald.Maczuga@BNSF.com

Date: _____

Ernest R. Peo, III
City of Lincoln, Nebraska
555 South 10th Street
Lincoln, NE 68508
Attn: Chief Assistant City Attorney

Re: Review of Plans and Specifications dated September 2, 2010, drafted by Olsson Associates (hereinafter called the "**Plans and Specifications**")

Dear Mr. Peo:

This letter serves as BNSF Railway Company's ("**BNSF**") response to its review of the Plans and Specifications covering the construction of the West Haymarket Utility Relocation - Project Number 870501. BNSF has reviewed these plans and no exceptions are taken. BNSF has not reviewed the design details or calculations for structural integrity or engineering accuracy. BNSF accepts no responsibility for errors or omissions in the design of the project. These comments are given to the City of Lincoln, Nebraska ("**City**") pursuant to Section 3.1.1 of that certain Construction and Maintenance Agreement between BNSF and City, dated _____, 2010. If the Plans and Specifications are revised by City subsequent to the date set forth above, this letter shall no longer serve as BNSF's written comments and City must resubmit said Plans and Specifications to BNSF for review.

Regards,

Gerald Maczuga
Project Engineer

EXHIBIT C

Contractor Requirements

1.01 General

- **1.01.01** The Contractor must cooperate with **BNSF RAILWAY COMPANY**, hereinafter referred to as "Railway" during the performance of the C&M Work (as defined in Exhibit C-1) and any other work over, under, on or adjacent to Railway Property.

- **1.01.02** The Contractor must execute and deliver to the Railway duplicate copies of the Exhibit C-1 Contractor Right of Entry for C&M Work, in the form attached hereto, obligating the Contractor to provide and maintain in full force and effect the insurance called for under Section 3 of said Exhibit C-1. Questions regarding procurement of the Railroad Protective Liability Insurance should be directed to Rosa Martinez at Marsh, USA, 214-303-8519.

- **1.01.03** The Contractor must plan, schedule and conduct all C&M Work activities so as not to interfere with the movement of any trains on Railway Property.

- **1.01.04** The Contractor's right to enter Railway Property is subject to the absolute right of Railway to cause the Contractor's work on Railway Property to cease if, in the opinion of Railway, Contractor's activities create a hazard to Railway Property, employees, and/or operations. Railway will have the right to stop construction work on the C&M Work if any of the following events take place: (i) Contractor (or any of its subcontractors) performs the C&M Work in a manner contrary to the plans and specifications approved by Railway; (ii) Contractor (or any of its subcontractors), in Railway's opinion, prosecutes the C&M Work in a manner which is hazardous to Railway Property, facilities or the safe and expeditious movement of railroad traffic; or (iii) the insurance described in the attached Exhibit C-1 is canceled during the course of the C&M Work. The work stoppage will continue until all necessary actions are taken by Contractor or its subcontractor to rectify the situation to the satisfaction of Railway's Division Engineer or until additional insurance has been delivered to and accepted by Railway. Any such work stoppage under this provision will not give rise to any liability on the part of Railway. Railway's right to stop the C&M Work is in addition to any other rights Railway may have including, but not limited to, actions or suits for damages or lost profits. In the event that Railway desires to stop the C&M Work, Railway agrees to immediately notify the following individual in writing:

  Roger Figard, City Engineer
  Department of Public Works and Utilities
  City of Lincoln, Nebraska
  555 South 10th Street
  Lincoln, NE 68508

- **1.01.05** Contractor shall, and shall cause all Contractor parties to, strictly comply with all federal, state and local environmental laws and regulations in its use of Railway's Property, including, but not limited to, the Resource Conservation and Recovery Act, as amended (RCRA), the Clean Water Act, the Oil Pollution Act, the Hazardous Materials Transportation Act, CERCLA (collectively, the "**Environmental Laws**") with respect to Railway's Property. Contractor shall not maintain a "treatment," "storage," "transfer" or "disposal" facility, or "underground storage tank," as those terms are defined by Environmental Laws, on Railway's Property. Contractor shall not handle, transport, release or suffer the release of "hazardous

waste" or "hazardous substances", as "hazardous waste" and "hazardous substances" may now or in the future be defined by any Environmental Laws, except as may be pre-existing in Railway Property and as encountered in the C&M Work and then only in compliance with Environmental Laws, and shall not use any soils or other materials containing hazardous waste or hazardous substances in connection with the C&M Work, or otherwise bring any hazardous waste or hazardous substances onto any Railway Property.

Contractor shall give Railway immediate notice to Railway's Resource Operations Center at (800) 832-5452 in the event of any release of hazardous substances on or from Railway Property, violation of Environmental Laws, or inspection or inquiry by governmental authorities charged with enforcing Environmental Laws with respect to Contractor's use of Railway Property. Contractor shall use best efforts to promptly respond to any release arising from or related to its activities contemplated in the C&M Work. Contractor shall also give Railway notice of all measures undertaken on Contractor's behalf to investigate, remediate, respond to or otherwise cure such release or violation.

In the event Contractor has notice of a release or violation of Environmental Laws which occurred or may occur as a result of Contractor's activities contemplated in the C&M Work, Contractor shall take timely measures to investigate, remediate, respond to or otherwise cure as required by applicable law such release or violation affecting Railway Property or improvements. If during the C&M Work, soils or other materials considered to be environmentally contaminated are exposed, Contractor will remove and safely dispose of said contaminated soils. Determination of soils contamination and applicable disposal procedures thereof will be made only by an agency having the capacity and authority to make such a determination.

Contractor agrees to periodically to furnish Railway upon written request with reasonable proof that it is in compliance with this **Section 1.01.05**.

- **1.01.06** All C&M Work must performed (i) in a good and workmanlike manner, (ii) in accordance with plans and specifications approved in advance by Railway (the "**Approved Plans**"), (iii) in conformance with applicable building codes and all applicable engineering, safety and any and all laws, statutes, regulations, ordinances, orders, covenants, restrictions, or decisions of any court of competent jurisdiction ("**Legal Requirements**"), (iv) in accordance with the accepted industry standards of care, skill and diligence, and (v) in such a manner as shall not adversely affect the structural integrity or maintenance of any Railway improvements or other improvements on or near Railway Property, or any lateral support of any structures adjacent to or in the proximity of any Railway improvements or Railway Property. In addition, the C&M Work must be promptly commenced by the Contractor and thereafter diligently prosecuted to conclusion in its logical order and sequence. Furthermore, any changes or modifications of the C&M Work which affect Railway will be subject to Railway's written approval prior to the commencement of any such changes or modifications from the Railway's Project Engineer.

- **1.01.07** Contractor shall be responsible for all job site cleanup and restoration, including removal of all construction materials, concrete debris, surplus soil, refuse, contaminated soils, asphalt debris, litter and other waste materials resulting from the C&M Work to the reasonable satisfaction of Railway's Division Engineer.

- **1.01.08** The Contractor must notify the City at City's City Engineer, telephone number (402) 441-7567 and Railway's Project Engineer, telephone number (402) 458-7537 at least ten (10) calendar days before commencing any C&M Work on Railway Property.

- **1.01.09** For any bridge demolition and/or falsework above any tracks or any excavations located with any part of the excavations located within, whichever is greater, twenty-five (25) feet of the nearest track or intersecting a slope from the plane of the top of rail on a 2 horizontal to 1 vertical slope beginning at eleven (11) feet from centerline of the nearest track, both measured perpendicular to center line of track, the Contractor must furnish the Railway five sets of working drawings showing details of construction affecting Railway Property and tracks. The working drawing must include the proposed method of installation and removal of falsework, shoring or cribbing, not included in the contract plans and two sets of structural calculations of any falsework, shoring or cribbing. For all excavation and shoring submittal plans, the current "BNSF-UPRR Guidelines for Temporary Shoring" must be used for determining the design loading conditions to be used in shoring design, and all calculations and submittals must be in accordance with the current "BNSF-UPRR Guidelines for Temporary Shoring". All submittal drawings and calculations must be stamped by a registered professional engineer licensed to practice in the state the project is located. All calculations must take into consideration railway surcharge loading and must be designed to meet American Railway Engineering and Maintenance-of-Way Association (previously known as American Railway Engineering Association) Coopers E-80 live loading standard. All drawings and calculations must be stamped by a registered professional engineer licensed to practice in the state the project is located. The Contractor must not begin C&M Work until notified by the Railway that plans have been approved, which approved plans shall become part of the Approved Plans. The Contractor will be required to use lifting devices such as, cranes and/or winches to place or to remove any falsework over Railway's tracks. In no case will the Contractor be relieved of responsibility for results obtained by the implementation of the Approved Plans.

- **1.01.10** Subject to the movement of Railway's trains, Railway will cooperate with the *Contractor such that the C&M Work may be handled and performed in an efficient manner.* The Contractor will have no claim whatsoever for any type of damages or for extra or additional compensation in the event his work is delayed by the Railway.

1.02 Contractor Safety Orientation

- **1.02.01 No employee of the Contractor, its subcontractors, agents or invitees may enter Railway Property without first having completed Railway's Engineering Contractor Safety Orientation, found on the web site www.contractororientation.com. The Contractor must ensure that each of its employees, subcontractors, agents or invitees completes Railway's Engineering Contractor Safety Orientation through internet sessions before any C&M Work is performed. Additionally, the Contractor must ensure that each and every one of its employees, subcontractors, agents or invitees possesses a card certifying completion of the Railway's Engineering Contractor Safety Orientation before entering Railway Property. The Contractor is responsible for the cost of the Railway's Engineering Contractor Safety Orientation. The Contractor must renew the Railway's Engineering Contractor Safety Orientation annually. Further clarification can be found on the web site or from the Railway's Project Engineer.**

1.03 Railway Requirements

- **1.03.01** The Contractor must take protective measures as are necessary to keep railway facilities, including track ballast, free of sand, debris, and other foreign objects and materials resulting from his operations. Any damage to railway facilities resulting from Contractor's

operations will be repaired or replaced by Railway and the cost of such repairs or replacement must be paid for by the Contractor.

- **1.03.02** The Contractor must notify Railway's Project Engineer, telephone number (402) 458-7537, and provide blasting plans to the Railway for review seven (7) calendar days prior to conducting any blasting operations adjacent to or on Railway Property.

- **1.03.03** The Contractor must abide by the following temporary clearances during construction:

  - 15' Horizontally from centerline of nearest track
  - 21'-6" Vertically above top of rail
  - 27'-0" Vertically above top of rail for electric wires carrying less than 750 volts
  - 28'-0" Vertically above top of rail for electric wires carrying 750 volts to 15,000 volts
  - 30'-0" Vertically above top of rail for electric wires carrying 15,000 volts to 20,000 volts
  - 34'-0" Vertically above top of rail for electric wires carrying more than 20,000 volts

- **1.03.04** Upon completion of construction, the following clearances shall be maintained:

  - 25' Horizontally from centerline of nearest existing or future track to the face of the pier or abutment structure
  - 31' Vertically above top of rail to the bottom of the Pedestrian Bridge

- **1.03.05** Any infringement within State statutory clearances due to the Contractor's operations must be submitted to the Railway and to the City and must not be undertaken until approved in writing by the Railway, and until the City has obtained any necessary authorization from the State Regulatory Authority for the infringement. No extra compensation will be allowed in the event the Contractor's C&M Work is delayed pending Railway approval, and/or the State Regulatory Authority's approval.

- **1.03.06** In the case of impaired vertical clearance above top of rail, Railway will have the option of installing tell-tales or other protective devices Railway deems necessary for protection of Railway operations. The cost of tell-tales or protective devices will be borne by the Contractor.

- **1.03.07** The details of construction affecting the Railway Property and tracks not included in the City Work Final Design or Approved Plans for the C&M Work must be submitted to the Railway by the City for approval before work is undertaken and this work must not be undertaken until approved by the Railway.

- **1.03.08** At other than public road crossings, the Contractor must not move any equipment or materials across Railway's tracks until permission has been obtained from the Railway. The Contractor must obtain a "Temporary Construction Crossing Agreement" from the Railway prior to moving his equipment or materials across Railway's tracks. The temporary crossing must be gated and locked at all times when not required for use by the Contractor. The temporary crossing for use of the Contractor will be constructed and, at the completion of the project, removed at the expense of the Contractor.

- **1.03.09** Discharge, release or spill on the Railway Property of any hazardous substances, oil, petroleum, constituents, pollutants, contaminants, or any hazardous waste is prohibited

and Contractor must immediately notify the Railway's Resource Operations Center at 1(800) 832-5452, of any discharge, release or spills in excess of a reportable quantity. Contractor must not allow Railway Property to become a treatment, storage or transfer facility as those terms are defined in the Resource Conservation and Recovery Act or any state analogue.

- **1.03.10** The Contractor, upon completion of the C&M Work, must promptly remove from the Railway Property all of Contractor's tools, equipment, implements and other materials, whether brought upon said Railway Property by Contractor or any subcontractor, employee or agent of Contractor or of any subcontractor, and must cause Railway Property to be left in a condition acceptable to Railway's Project Engineer.

1.04 Contractor Roadway Worker on Track Safety Program and Safety Action Plan

- **1.04.01** Each Contractor that will perform C&M Work within 25 feet of the centerline of a track must develop and implement a Roadway Worker Protection/On Track Safety Program and work with Railway's Project Engineer to develop an on track safety strategy as described in the guidelines listed in the on track safety portion of the Safety Orientation. This Program must provide Roadway Worker protection/on track training for all employees of the Contractor, its subcontractors, agents or invitees. This training is reinforced at the job site through job safety briefings. Additionally, each Contractor must develop and implement the Safety Action Plan, as provided for on the web site **www.contractororientation.com**, which will be made available to Railway prior to commencement of any work on Railway Property. During the performance of C&M Work, the Contractor must audit its C&M Work activities. The Contractor must designate an on-site Project Supervisor who will serve as the contact person for the Railway and who will maintain a copy of the Safety Action Plan, safety audits, and Material Safety Datasheets (MSDS), at the job site.

  Contractors shall ensure its employees, subcontractors and agents are United States citizens or legally working in this country under a work VISA.

1.05 Railway Flagger Services:

- **1.05.01** The Contractor must give Railway's Project Engineer, telephone number (402) 458-7537, a minimum of thirty (30) calendar days advance notice when flagging services will be required so that the Roadmaster can make appropriate arrangements (i.e., bulletin the flagger's position). If flagging services are scheduled in advance by the Contractor and it is subsequently determined by the parties hereto that such services are no longer necessary, the Contractor must give the Roadmaster five (5) working days advance notice so that appropriate arrangements can be made to abolish the position pursuant to union requirements.

- **1.05.02** Unless determined otherwise by Railway's Project Engineer, Railway flagger will be required and furnished when Contractor's C&M Work activities are located over, under and/or within twenty-five (25) feet measured horizontally from centerline of the nearest track and when cranes or similar equipment positioned beyond 25-feet from the track centerline could foul the track in the event of tip over or other catastrophic occurrence, but not limited thereto for the following conditions:

- **1.05.02a** When, upon inspection by Railway's Project Engineer, other conditions warrant.

- **1.05.02b** When any excavation is performed below the bottom of tie elevation, if, in the opinion of Railway's Project Engineer, track or other Railway facilities may be subject to movement or settlement.

- **1.05.02c** When C&M Work in any way interferes with the safe operation of trains at timetable speeds.

- **1.05.02d** When any hazard is presented to Railway track, communications, signal, electrical, or other facilities either due to persons, material, equipment or blasting in the vicinity.

- **1.05.02e** Special permission must be obtained from the Railway before moving heavy or cumbersome objects or equipment which might result in making the track impassable.

- **1.05.03** Flagging services will be performed by qualified Railway flaggers.

- **1.05.03a** Flagging crew generally consists of one employee. However, additional personnel may be required to protect Railway Property and operations, if deemed necessary by Railway's Project Engineer.

- **1.05.03b** Each time a flagger is called, the minimum period for billing will be the eight (8) hour basic day.

- **1.05.03c** The cost of flagger services provided by the Railway will be borne by City. The estimated cost for one (1) flagger is approximately between $800.00-$1,600.00 for an eight (8) hour basic day with time and one-half or double time for overtime, rest days and holidays. The estimated cost for each flagger includes vacation allowance, paid holidays, Railway and unemployment insurance, public liability and property damage insurance, health and welfare benefits, vehicle, transportation, meals, lodging, radio, equipment, supervision and other costs incidental to performing flagging services. Negotiations for Railway labor or collective bargaining agreements and rate changes authorized by appropriate Federal authorities may increase actual or estimated flagging rates. **THE GOVERNMENTAL FLAGGING RATE IN EFFECT AT THE TIME OF PERFORMANCE BY THE CONTRACTOR HEREUNDER WILL BE USED TO CALCULATE THE ACTUAL COSTS OF FLAGGING PURSUANT TO THIS PARAGRAPH.**

- **1.05.03d** The average train traffic on this route is 65 freight trains per 24-hour period at a timetable speed of 40 MPH and 2 passenger trains at a timetable speed of 15 MPH.

1.06 Contractor General Safety Requirements

- **1.06.01 C&M Work in the proximity of railway track(s) is potentially hazardous where movement of trains and equipment can occur at any time and in any direction. All work performed by contractors within 25 feet of any track must be in compliance with FRA Roadway Worker Protection Regulations. No Contractor shall conduct any tests, investigations or any other activity using mechanized equipment and/or machinery, or place or store any mechanized equipment, tools or other materials, within twenty-five (25) feet of the centerline of any railroad track on Railway Property, except after Contractor has obtained written approval from Railway Director Engineering Services, and then only in strict accordance with the terms and any conditions of such approval.**

- **1.06.02 Before beginning any task on Railway Property, a thorough job safety briefing must be conducted with all personnel involved with the task and repeated when the**

personnel or task changes. If the task is within 25 feet of any track, the job briefing <u>must</u> include the Railway's flagger, as applicable, and include the procedures the Contractor will use to protect its employees, subcontractors, agents or invitees from moving any equipment adjacent to or across any Railway track(s).

- **1.06.03 Workers must not work within 25 feet of the centerline of any track without an on track safety strategy approved by Railway's Project Engineer. When authority is provided, every contractor employee must know: (1) who the Railway flagger is, and how to contact the flagger, (2) limits of the authority, (3) the method of communication to stop and resume work, and (4) location of the designated places of safety. Persons or equipment entering flag/work limits that were not previously job briefed, must notify the flagger immediately, and be given a job briefing when working within 25 feet of the center line of track.**

- **1.06.04 When Contractor employees are required to work on Railway Property after normal working hours or on weekends, Railway's Project Engineer must be notified. A minimum of two employees must be present at all times.**

- **1.06.05** Any employees, agents or invitees of Contractor or its subcontractors under suspicion of being under the influence of drugs or alcohol, or in the possession of same, will be removed from the Railway Property and subsequently released to the custody of a representative of Contractor management. Future access to the Railway Property by that employee will be denied.

- **1.06.06** Any damage to Railway Property, or any hazard noticed on passing trains must be reported immediately to the Railway's Project Engineer. Any vehicle or machine which may come in contact with track, signal equipment, or structure (bridge) and could result in a train derailment must be reported immediately to the Railway's Project Engineer and to the Railway's Resource Operations Center at 1 (800) 832-5452. Local emergency numbers are to be obtained from Railway's Project Engineer prior to the start of any C&M Work and must be posted at the job site.

- **1.06.07** For safety reasons, all persons are prohibited from having pocket knives, firearms or other deadly weapons in their possession while working on Railway Property.

- **1.06.08** All personnel protective equipment (PPE) used on Railway Property must meet applicable OSHA and ANSI specifications. Current Railway personnel protective equipment requirements are listed on the web site, **<u>www.contractororientation.com</u>,** however, a partial list of the requirements include: a) safety glasses with permanently affixed side shields (no yellow lenses); b) hard hats c) safety shoe with: hardened toes, above-the-ankle lace-up and a defined heel; and d) high visibility retro-reflective work wear. The Railway's Project Engineer is to be contacted regarding local specifications for meeting requirements relating to hi-visibility work wear. Hearing protection, fall protection, gloves, and respirators must be worn as required by State and Federal regulations. **<u>(NOTE – Should there be a discrepancy between the information contained on the web site and the information in this paragraph, the web site will govern.)</u>**

- **1.06.09 THE CONTRACTOR MUST NOT PILE OR STORE ANY MATERIALS, MACHINERY OR EQUIPMENT CLOSER THAN 25'-0" TO THE CENTER LINE OF THE NEAREST RAILWAY TRACK. MATERIALS, MACHINERY OR EQUIPMENT MUST NOT BE STORED OR LEFT WITHIN 250 FEET OF ANY HIGHWAY/RAIL AT-GRADE CROSSINGS OR TEMPORARY CONSTRUCTION CROSSING, WHERE STORAGE OF**

THE SAME WILL OBSTRUCT THE VIEW OF A TRAIN APPROACHING THE CROSSING. PRIOR TO BEGINNING WORK, THE CONTRACTOR MUST ESTABLISH A STORAGE AREA WITH CONCURRENCE OF THE RAILWAY'S PROJECT ENGINEER.

- **1.06.10** Machines or vehicles must not be left unattended with the engine running. Parked machines or equipment must be in gear with brakes set and if equipped with blade, pan or bucket, they must be lowered to the ground. All machinery and equipment left unattended on Railway Property must be left inoperable and secured against movement. (See internet Engineering Contractor Safety Orientation program for more detailed specifications)

- **1.06.11** Workers must not create and leave any conditions at the work site that would interfere with water drainage. Any C&M Work performed over water must meet all Federal, State and Local regulations.

- **1.06.12** All power line wires must be considered dangerous and of high voltage unless informed to the contrary by proper authority. For all power lines the minimum clearance between the lines and any part of the equipment or load must be; 200 KV or below - 15 feet; 200 to 350 KV - 20 feet; 350 to 500 KV - 25 feet; 500 to 750 KV - 35 feet; and 750 to 1000 KV - 45 feet. If capacity of the line is not known, a minimum clearance of 45 feet must be maintained. A person must be designated to observe clearance of the equipment and give a timely warning for all operations where it is difficult for an operator to maintain the desired clearance by visual means.

1.07 Excavation

- **1.07.01** Before excavating, the Contractor must determine whether any underground pipe lines, electric wires, or cables, including fiber optic cable systems are present and located within the C&M Work area. The Contractor must determine whether excavation on Railway Property could cause damage to buried cables resulting in delay to Railway traffic and disruption of service to users. Delays and disruptions to service may cause business interruptions involving loss of revenue and profits. Before commencing excavation, the Contractor must contact Railway's Project Engineer, telephone number (402) 458-7537. All underground and overhead wires will be considered HIGH VOLTAGE and dangerous until verified with the company having ownership of the line. **It is the Contractor's responsibility to notify any other companies that have underground utilities in the area and arrange for the location of all underground utilities before excavating.**

- **1.07.02** The Contractor must cease all work and notify Railway immediately before continuing excavation in the area if obstructions are encountered which do not appear on drawings. If the obstruction is a utility and the owner of the utility can be identified, then the Contractor must also notify the owner immediately. If there is any doubt about the location of underground cables or lines of any kind, no work must be performed until the exact location has been determined. There will be no exceptions to these instructions.

- **1.07.03** All excavations must be conducted in compliance with applicable OSHA regulations and, regardless of depth, must be shored where there is any danger to tracks, structures or personnel.

- **1.07.04** Any excavations, holes or trenches on Railway Property must be covered, guarded and/or protected when not being worked on. When leaving work site areas at night and over weekends, the areas must be secured and left in a condition that will ensure that Railway

employees and other personnel who may be working or passing through the area are protected from all hazards. All excavations must be back filled as soon as possible.

- **1.07.05** Contractor will be responsible at no cost to Railway to locate and make any adjustments necessary to any wire lines, pipe lines, or other utilities, fences, buildings, improvements or other facilities located within Railway Property (collectively, "**Other Improvements**"). Contractor must contact the owner(s) of the Other Improvements notifying them of any work that may damage these Other Improvements and/or interfere with their service and, if required, obtain the owner's written approval prior to so affecting the Other Improvements. Contractor must mark all Railway improvements and Other Improvements on the applicable Approved Plans or other plans and specifications approved in advance by Railway, and mark all Railway improvements and Other Improvements in the field in order to verify their locations. Contractor must also use all reasonable methods when working on or near Railway Property to determine if any Railway improvements or Other Improvements (fiber optic, cable, communication or otherwise) may exist. Failure to mark or identify any Railway improvements or Other Improvements will be sufficient cause for Railway to stop construction at no cost to Railway until such items are completed. Contractor must make all adjustments and other work described in this Section 1.07.05, including without limitation adjustments to Other Improvements and work on and affecting Railway Property, in a manner that does not adversely impact utility service to Railway.

1.08 Hazardous Waste, Substances and Material Reporting

- **1.08.01** If Contractor discovers any hazardous waste, hazardous substance, petroleum or other deleterious material, including but not limited to any non-containerized commodity or material, on or adjacent to Railway Property, in or near any surface water, swamp, wetlands or waterways, while performing any work under this Agreement, Contractor must immediately: (a) notify the Railway's Resource Operations Center at 1 (800) 832-5452, of such discovery: (b) take safeguards necessary to protect its employees, subcontractors, agents and/or third parties: and (c) exercise due care with respect to the release, including the taking of any appropriate measure to minimize the impact of such release.

1.09 Personal Injury Reporting

- **1.09.01** The Railway is required to report certain injuries as a part of compliance with Federal Railroad Administration (FRA) reporting requirements. Any personal injury sustained by an employee of the Contractor, subcontractor or Contractor's invitees while on the Railway Property must be reported immediately (by phone mail if unable to contact in person) to the Railway's Project Engineer. The Non-Employee Personal Injury Data Collection Form contained herein is to be completed and sent by Fax to the Railway at 1 (817) 352-7595 and to the Railway's Project Engineer no later than the close of shift on the date of the injury.

NON-EMPLOYEE PERSONAL INJURY DATA COLLECTION

INFORMATION REQUIRED TO BE COLLECTED PURSUANT TO FEDERAL REGULATION. IT SHOULD BE USED FOR COMPLIANCE WITH FEDERAL REGULATIONS ONLY AND IS NOT INTENDED TO PRESUME ACCEPTANCE OF RESPONSIBILITY OR LIABILITY.

1. Accident City/St
2. Date: _____ Time: _____ County:
3. Temperature:
4. Weather
   (if non-Railway location)

5. Social Security #

6. Name (last, first, mi)

7. Address: Street: _____ City: St._____ Zip:

8. Date of Birth: _____ and/or Age _____ Gender:
   (if available)

9. (a) Injury: _____ (b) Body Part:
   (i.e. (a) Laceration (b) Hand)

11. Description of Accident (To include location, action, result, etc.):

12. Treatment:
    __ First Aid Only
    __ Required Medical Treatment
    __ Other Medical Treatment

13. Dr. Name _____ 30. Date: _____

14. Dr. Address:
    Street: _____ City: _____ St: _____ Zip: _____

15. Hospital Name:

16. Hospital Address:
    Street: _____ City: _____ St: _____ Zip: _____

17. Diagnosis:

FAX TO RAILWAY AT (817) 352-7595
AND COPY TO RAILWAY ROADMASTER FAX

EXHIBIT C-1(A)

CONTRACTOR'S RIGHT OF ENTRY
For C&M Work

BNSF RAILWAY COMPANY
Attention: Project Engineer

Gentlemen:

The undersigned (hereinafter, the "**Contractor**"), has entered into a contract (the "**Contract**") dated _____, 20_ with the City of Lincoln, Nebraska ("**City**") for the performance of certain work ("**C&M Work**") in connection with the construction of entertainment, recreation, lodging, offices, retail and/or other complementary and/or supporting facilities in Lincoln, Nebraska (collectively, the "**West Haymarket Project**"). The work to be performed under this Agreement is deemed to be "City C&M Work" (as defined in that certain Construction and Maintenance Agreement ["**C&M Agreement**"] dated _____, 2010, between BNSF Railway Company and the City). Performance of such C&M Work will necessarily require Contractor to enter BNSF RAILWAY COMPANY ("**Railway**") right of way and property ("**Railway Property**"). The Contract provides that no C&M Work will be commenced within Railway Property until the Contractor employed in connection with said C&M Work for the **City of Lincoln, Nebraska** (i) executes and delivers to Railway an Agreement in the form hereof, and (ii) provides insurance of the coverage and limits specified in such Agreement and Section 3 herein. If this Agreement is executed by a party who is not the Owner, General Partner, President or Vice President of Contractor, Contractor must furnish evidence to Railway certifying that the signatory is empowered to execute this Agreement on behalf of Contractor.

Accordingly, in consideration of Railway granting permission to Contractor to enter upon Railway Property and as an inducement for such entry, Contractor, effective on the date of the Contract, has agreed and does hereby agree with Railway as follows:

Section 1. RELEASE OF LIABILITY AND INDEMNITY

TO THE FULLEST EXTENT PERMITTED BY LAW, CONTRACTOR SHALL RELEASE, INDEMNIFY, DEFEND AND HOLD HARMLESS RAILWAY AND RAILWAY'S AFFILIATED COMPANIES, PARTNERS, SUCCESSORS, ASSIGNS, LEGAL REPRESENTATIVES, OFFICERS, DIRECTORS, SHAREHOLDERS, EMPLOYEES AND AGENTS FOR, FROM AND AGAINST ANY AND ALL CLAIMS, LIABILITIES, FINES, PENALTIES, COSTS, DAMAGES, LOSSES, LIENS, CAUSES OF ACTION, SUITS, DEMANDS, JUDGMENTS AND EXPENSES (INCLUDING, WITHOUT LIMITATION, COURT COSTS AND ATTORNEYS' FEES) OF ANY NATURE, KIND OR DESCRIPTION OF ANY PERSON (INCLUDING, WITHOUT LIMITATION, THE EMPLOYEES OF THE PARTIES HERETO) OR ENTITY DIRECTLY OR INDIRECTLY (COLLECTIVELY, "LIABILITIES") ARISING OUT OF, RESULTING FROM OR CAUSALLY RELATED TO (IN WHOLE OR IN PART):

(i) ANY RIGHTS OR INTERESTS GRANTED TO CONTRACTOR PURSUANT TO THIS AGREEMENT;

(ii) THE USE, OCCUPANCY OR PRESENCE OF CONTRACTOR AND CONTRACTOR PARTIES (DEFINED BELOW) AND/OR ANY WORK PERFORMED BY CONTRACTOR AND CONTRACTOR PARTIES IN, ON, OR ABOUT RAILWAY'S PROPERTY OR RIGHT-OF-WAY AND/OR THE WEST HAYMARKET PROJECT, INCLUDING, WITHOUT LIMITATION, OPERATION OF THE PEDESTRIAN BRIDGE, SECURITY FENCING, OR STORM WATER MITIGATION BY ANY CONTRACTOR PARTY (DEFINED BELOW);

(iii) ANY ENVIRONMENTAL MATTERS ARISING FROM CONTRACTOR AND/OR CONTRACTOR PARTIES' USE AND OCCUPANCY OF RAILWAY'S RIGHT-OF-WAY OR OTHER RAILWAY PROPERTY, INCLUDING WITHOUT LIMITATION USE AND OCCUPANCY OF RAILWAY'S RIGHT-OF-WAY OR OTHER RAILWAY PROPERTY IN CONNECTION WITH PERFORMANCE OF THE C&M WORK;

(iv) ANY DAMAGE TO OR DESTRUCTION OF ANY TELECOMMUNICATION LINES IN CONNECTION WITH THE WEST HAYMARKET PROJECT BY CONTRACTOR AND/OR CONTRACTOR PARTIES, INCLUDING BUT NOT LIMITED TO (A) ANY INJURY TO OR DEATH OF ANY PERSON EMPLOYED BY OR ON BEHALF OF ANY TELECOMMUNICATIONS COMPANY, AND/OR ITS CONTRACTORS, AGENTS AND/OR EMPLOYEES AS A RESULT OF SUCH DAMAGE OR DESTRUCTION, AND/OR (B) ANY CLAIM OR CAUSE OF ACTION FOR ALLEGED LOSS OF PROFITS OR REVENUE BY, OR LOSS OF SERVICE BY A CUSTOMER OR USER OF SUCH TELECOMMUNICATION COMPANY(IES) AS A RESULT OF SUCH DAMAGE OR DESTRUCTION;

(v) CONTRACTOR'S BREACH OF THE TERMS AND CONDITIONS OF THIS AGREEMENT; OR

(vi) ANY ACT OR OMISSION OF CONTRACTOR OR ITS OFFICERS, AGENTS, INVITEES, EMPLOYEES OR SUBCONTRACTORS (SUCH OFFICERS, AGENTS, INVITEES, EMPLOYEES AND SUBCONTRACTORS BEING REFERRED TO HEREIN INDIVIDUALLY AS A "CONTRACTOR PARTY" AND COLLECTIVELY, "CONTRACTOR PARTIES"), OR ANYONE DIRECTLY OR INDIRECTLY EMPLOYED BY ANY OF THEM, OR ANYONE THEY CONTROL OR EXERCISE CONTROL OVER.

THE LIABILITY ASSUMED BY CONTRACTOR WILL NOT BE AFFECTED BY THE FACT, IF IT IS A FACT, THAT ANY DAMAGE, DESTRUCTION, INJURY OR DEATH WAS OCCASIONED BY OR CONTRIBUTED TO BY THE NEGLIGENCE OF RAILWAY, ITS AGENTS, SERVANTS, EMPLOYEES OR OTHERWISE, BUT EXCLUDING CLAIMS WHOLLY CAUSED BY RAILWAY'S SOLE NEGLIGENCE AND EXCLUDING CLAIMS TO THE EXTENT THAT SUCH CLAIMS ARE CAUSED BY THE WILLFUL MISCONDUCT OR GROSS NEGLIGENCE OF RAILWAY.

FURTHER, TO THE FULLEST EXTENT PERMITTED BY LAW, CONTRACTOR AGREES, REGARDLESS OF ANY NEGLIGENCE OR ALLEGED NEGLIGENCE OF RAILWAY, TO INDEMNIFY, DEFEND AND HOLD HARMLESS RAILWAY AGAINST AND ASSUME THE DEFENSE OF ANY LIABILITIES ASSERTED AGAINST OR SUFFERED BY RAILWAY UNDER OR RELATED TO THE FEDERAL EMPLOYERS' LIABILITY ACT ("FELA") WHENEVER EMPLOYEES OF CONTRACTOR OR ANY CONTRACTOR PARTY CLAIM OR ALLEGE THAT THEY ARE EMPLOYEES OF RAILWAY OR OTHERWISE. THIS INDEMNITY SHALL ALSO EXTEND, ON THE SAME BASIS, TO FELA CLAIMS BASED ON ACTUAL OR ALLEGED VIOLATIONS OF ANY FEDERAL, STATE OR LOCAL LAWS OR REGULATIONS, INCLUDING BUT NOT LIMITED TO THE SAFETY APPLIANCE ACT, THE LOCOMOTIVE INSPECTION ACT, THE OCCUPATIONAL SAFETY AND HEALTH ACT, THE RESOURCE

CONSERVATION AND RECOVERY ACT, AND ANY SIMILAR STATE OR FEDERAL STATUTE.

Contractor further agrees, at its expense, in the name and on behalf of Railway, that it will adjust and settle all Liabilities against Railway, and will, at Railway's discretion, appear and defend any suits or actions of law or in equity brought against Railway on any claim or cause of action arising out of any liability assumed by Contractor under this Agreement for which Railway is liable or is alleged to be liable. Railway will give notice to Contractor, in writing, of the receipt or dependency of such claims and thereupon Contractor must proceed to adjust and handle to a conclusion such claims, and in the event of a suit being brought against Railway, Railway may forward summons and complaint or other process in connection therewith to Contractor, and Contractor, at Railway's discretion, must defend, adjust, or settle such suits and protect, indemnify, and save harmless Railway from and against all Liabilities arising out of any such claims or suits, provided that the foregoing indemnification obligations do not include Liabilities arising wholly out of the sole negligence of Railway or to the extent caused by the gross negligence or willful misconduct of Railway.

In addition to any other provision of this Agreement, in the event that all or any portion of this Article shall be deemed to be inapplicable for any reason, including without limitation as a result of a decision of an applicable court, legislative enactment or regulatory order, the parties agree that this Article shall be interpreted as requiring Contractor to indemnify Railway to the fullest extent permitted by applicable law. **THROUGH THIS AGREEMENT THE PARTIES EXPRESSLY INTEND FOR CONTRACTOR TO INDEMNIFY RAILWAY FOR RAILWAY'S ACTS OF NEGLIGENCE, BUT EXCLUDING CLAIMS WHOLLY CAUSED BY RAILWAY'S SOLE NEGLIGENCE AND EXCLUDING CLAIMS TO THE EXTENT THAT SUCH CLAIMS ARE CAUSED BY THE WILLFUL MISCONDUCT OR GROSS NEGLIGENCE OF RAILWAY.**

It is mutually understood and agreed that the assumption of liabilities and indemnification provided for in this Agreement survive any termination of this Agreement.

Section 2. TERM

This Agreement is effective from the date of the Contract until (i) the completion of the project set forth herein, and (ii) full and complete payment to Railway of any and all sums or other amounts owing and due hereunder.

Section 3. INSURANCE

Contractor must, at its sole cost and expense, procure and maintain during the life of this Agreement the following insurance coverage:

A. Commercial General Liability Insurance. This insurance shall contain broad form contractual liability with a combined single limit of a minimum of $5,000,000.00 per occurrence, and $10,000,000.00 in the aggregate, but in no event less than the amount otherwise carried by the Contractor. Coverage must be purchased on a post 1998 ISO occurrence form or equivalent and include coverage for, but not limited to, the following:
    - Bodily Injury and Property Damage
    - Personal Injury and Advertising Injury
    - Fire legal liability
    - Products and completed operations

This policy shall also contain the following endorsements, which shall be indicated on the certificate of insurance:

- The definition of insured contract shall be amended to remove any exclusion or other limitation for any work being done within 50 feet of railroad property.
- Waiver of subrogation in favor of and acceptable to Railroad.
- Additional insured endorsement in favor of and acceptable to Railroad.
- Separation of insureds.
- The policy shall be primary and non-contributing with respect to any insurance carried by Railroad.

It is agreed that the workers' compensation and employers' liability related exclusions in the Commercial General Liability insurance policy(s) required herein are intended to apply to employees of the policy holder and shall not apply to Railroad employees.

No other endorsements limiting coverage as respects obligations under this Agreement may be included on the policy with regard to the work being performed under this Agreement.

B. Business Automobile Insurance. This insurance shall contain a combined single limit of at least $1,000,000 per occurrence, and include coverage for, but not limited to the following:

- Bodily injury and property damage
- Any and all vehicles owned, used or hired

This policy shall also contain the following endorsements or language, which shall be indicated on the certificate of insurance:

- Waiver of subrogation in favor of and acceptable to Railroad.
- Additional insured endorsement in favor or and acceptable to Railroad.
- Separation of insureds.
- The policy shall be primary and non-contributing with respect to any insurance carried by Railroad.

C. Workers Compensation and Employers Liability Insurance. This insurance shall include coverage for, but not limited to:

- Contractor's statutory liability under the worker's compensation laws of the state(s) in which the work is to be performed. If optional under State law, the insurance must cover all employees anyway.
- Employers' Liability (Part B) with limits of at least $500,000 each accident, $500,000 by disease policy limit, $500,000 by disease each employee.

This policy shall also contain the following endorsements or language, which shall be indicated on the certificate of insurance:

- Waiver of subrogation in favor of and acceptable to Railroad.

D. Railroad Protective Liability Insurance. This insurance shall name only the Railroad as the Insured with coverage of at least $5,000,000 per occurrence and $10,000,000 in the aggregate. The policy shall be issued on a standard ISO form CG 00 35 10 93 and include the following:

- Endorsed to include the Pollution Exclusion Amendment (ISO form CG 28 31 10 93)
- Endorsed to include the Limited Seepage and Pollution Endorsement.

- Endorsed to remove any exclusion for punitive damages.
- No other endorsements restricting coverage may be added.
- The original policy must be provided to Railroad prior to performing any work or services under this Agreement

In lieu of providing a Railroad Protective Liability Policy, Contractor may participate in BNSF's Blanket Railroad Protective Liability Insurance Policy available to Contractor.

Other Requirements:

All policies (applying to coverage listed above) must not contain an exclusion for punitive damages and certificates of insurance must reflect that no exclusion exists.

Contractor agrees to waive its right of recovery against Railroad for all claims and suits against Railroad, except for claims and suits arising wholly out of the sole negligence, or to the extent caused by the gross negligence or willful misconduct, of Railroad. In addition, its insurers, through the terms of the policy or policy endorsement, waive their right of subrogation against Railroad for all claims and suits, except for claims and suits arising wholly out of the sole negligence, or to the extent caused by the gross negligence of willful misconduct, of Railroad. The certificate of insurance must reflect the waiver of subrogation endorsement. Contractor further waives its right of recovery, and its insurers also waive their right of subrogation against Railroad for loss of its owned or leased property or property under Contractor's care, custody or control, except for the right of recovery or right of subrogation arising wholly out of the sole negligence, or to the extent caused by the gross negligence or willful misconduct, of Railroad.

Contractor is not allowed to self-insure without the prior written consent of Railroad. If granted by Railroad, any deductible, self-insured retention or other financial responsibility for claims must be covered directly by Contractor in lieu of insurance. Any and all Railroad liabilities that would otherwise, in accordance with the provisions of this Agreement, be covered by Contractor's insurance will be covered as if Contractor elected not to include a deductible, self-insured retention or other financial responsibility for claims.

Prior to commencing the C&M Work, Contractor must furnish to Railroad acceptable certificate(s) of insurance including an original signature of the authorized representative evidencing the required coverage, endorsements, and amendments. The policy(ies) must contain a provision that obligates the insurance company(ies) issuing such policy(ies) to notify Railroad in writing at least 30 days prior to any cancellation, non-renewal, substitution or material alteration. This cancellation provision must be indicated on the certificate of insurance. Upon request from Railroad, a certified duplicate original of any required policy must be furnished. Certificate(s) should be sent to the following address:

Ebix BPO
PO Box 12010-BN
Hemet, CA 92546-8010
Fax number: 951-652-2882
Email: bnsf@ebix.com

Any insurance policy must be written by a reputable insurance company reasonably acceptable to Railroad or with a current Best's Guide Rating of A- and Class VII or better, and authorized to do business in the state(s) in which the service is to be provided.

Contractor represents that this Agreement has been thoroughly reviewed by Contractor's insurance agent(s)/broker(s), who have been instructed by Contractor to procure the insurance coverage required by this Agreement. Allocated Loss Expense must be in addition to all policy limits for coverages referenced above.

Not more frequently than once every five years, Railroad may reasonably modify the required insurance coverage to reflect then-current risk management practices in the railroad industry and underwriting practices in the insurance industry.

If any portion of the operation is to be subcontracted by Contractor, Contractor must require that its subcontractors provide and maintain the insurance coverages set forth herein, naming Railroad as an additional insured, and requiring that the subcontractors release, defend and indemnify Railroad to the same extent and under the same terms and conditions as Contractor is required to release, defend and indemnify Railroad herein.

Failure to provide evidence as required by this section will entitle, but not require, Railroad to immediately suspend work under this Agreement until such evidence is provided. Acceptance of a certificate that does not comply with this section will not operate as a waiver of Contractor's obligations hereunder.

The fact that insurance (including, without limitation, self-insurance) is obtained by Contractor will not be deemed to release or diminish the liability of Contractor including, without limitation, liability under the indemnity provisions of this Agreement. Damages recoverable by Railroad will not be limited by the amount of the required insurance coverage.

For purposes of this section, Railroad means "Burlington Northern Santa Fe, LLC", "BNSF Railway Company" and the subsidiaries, successors, assigns and affiliates of each.

Section 4. EXHIBIT C CONTRACTOR REQUIREMENTS

The Contractor must observe and comply with all provisions, obligations, requirements and limitations contained in the Contract, and the Contractor Requirements set forth on Exhibit C attached to this Agreement and the Contract, including, but not be limited to, payment of all costs incurred for any damages to Railway roadbed, tracks, and/or appurtenances thereto, resulting from use, occupancy, or presence of its employees, representatives, or agents or subcontractors on or about the construction site.

Section 5. TRAIN DELAY

Contractor is responsible for and hereby indemnifies and holds harmless Railway (including its affiliated railway companies, and its tenants) for, from and against all damages arising from any unscheduled delay to a freight or passenger train which affects Railway's ability to fully utilize its equipment and to meet customer service and contract obligations. Contractor will be billed, as further provided below, for the economic losses arising from loss of use of equipment, contractual loss of incentive pay and bonuses and contractual penalties resulting from train delays, whether caused by Contractor, or subcontractors, or by the Railway performing work under this Agreement. Railway agrees that it will not perform any act to unnecessarily cause train delay.

For loss of use of equipment, Contractor will be billed the current freight train hour rate per train as determined from Railway's records. Any disruption to train traffic may cause delays to multiple trains at the same time for the same period.

Additionally, the parties acknowledge that passenger, U.S. mail trains and certain other grain, intermodal, coal and freight trains operate under incentive/penalty contracts between Railway and its customer(s). Under these arrangements, if Railway does not meet its contract service commitments, Railway may suffer loss of performance or incentive pay and/or be subject to penalty payments. Contractor is responsible for any train performance and incentive penalties or other contractual economic losses actually incurred by Railway which are attributable to a train delay caused by Contractor or its subcontractors.

The contractual relationship between Railway and its customers is proprietary and confidential. In the event of a train delay covered by this Agreement, Railway will share information relevant to any train delay to the extent consistent with Railway confidentiality obligations. Damages for train delay are currently $382.20 per hour per incident. **THE RATE THEN IN EFFECT AT THE TIME OF PERFORMANCE BY THE CONTRACTOR HEREUNDER WILL BE USED TO CALCULATE THE ACTUAL COSTS OF TRAIN DELAY PURSUANT TO THIS AGREEMENT.**

Contractor and its subcontractors must give Railway's Project Engineer (402) 458-7537 thirty (30) days' minimum advance notice of the times and dates for proposed work windows. Railway and Contractor will establish mutually agreeable work windows for the project. Railway has the right at any time to revise or change the work windows due to train operations or service obligations. Railway will not be responsible for any additional costs or expenses resulting from a change in work windows. Additional costs or expenses resulting from a change in work windows shall be accounted for in Contractor's expenses for the project.

Contractor and subcontractors must plan, schedule, coordinate and conduct all Contractor's work so as to not cause any delays to any trains.

[Signature page follows]

Kindly acknowledge receipt of this letter by signing and returning to the Railway two original copies of this letter, which, upon execution by Railway, will constitute an Agreement between us.

_____	
(Contractor)	**BNSF Railway Company**
By:_____	By:_____
Printed Name: _____	Name:_____
Title:_____	*Project Engineer*
Contact Person: _____	Accepted and effective this _____day of 20__.
Address: _____	
_____	
City:_____ State:___ Zip:____	
Fax: _____	
Phone: _____	
E-mail:_____	

EXHIBIT C-1(B)

CONTRACTOR'S RIGHT OF ENTRY
For C&M Work

BNSF RAILWAY COMPANY
Attention: Project Engineer

Gentlemen:

The undersigned (hereinafter, the "**Contractor**"), has entered into a contract (the "**Contract**") dated _____, 20_ with the City of Lincoln, Nebraska ("**City**") for the performance of certain work ("**C&M Work**") in connection with the construction of entertainment, recreation, lodging, offices, retail and/or other complementary and/or supporting facilities in Lincoln, Nebraska (collectively, the "**West Haymarket Project**"). The work to be performed under this Agreement is deemed to be "City C&M Work" (as defined in that certain Construction and Maintenance Agreement ["**C&M Agreement**"] dated _____, 2010, between BNSF Railway Company and the City). Performance of such C&M Work will necessarily require Contractor to enter BNSF RAILWAY COMPANY ("**Railway**") right of way and property ("**Railway Property**"). The Contract provides that no C&M Work will be commenced within Railway Property until the Contractor employed in connection with said C&M Work for the **City of Lincoln, Nebraska** (i) executes and delivers to Railway an Agreement in the form hereof, and (ii) provides insurance of the coverage and limits specified in such Agreement and Section 3 herein. If this Agreement is executed by a party who is not the Owner, General Partner, President or Vice President of Contractor, Contractor must furnish evidence to Railway certifying that the signatory is empowered to execute this Agreement on behalf of Contractor.

Accordingly, in consideration of Railway granting permission to Contractor to enter upon Railway Property and as an inducement for such entry, Contractor, effective on the date of the Contract, has agreed and does hereby agree with Railway as follows:

Section 1. RELEASE OF LIABILITY AND INDEMNITY

TO THE FULLEST EXTENT PERMITTED BY LAW, CONTRACTOR SHALL RELEASE, INDEMNIFY, DEFEND AND HOLD HARMLESS RAILWAY AND RAILWAY'S AFFILIATED COMPANIES, PARTNERS, SUCCESSORS, ASSIGNS, LEGAL REPRESENTATIVES, OFFICERS, DIRECTORS, SHAREHOLDERS, EMPLOYEES AND AGENTS FOR, FROM AND AGAINST ANY AND ALL CLAIMS, LIABILITIES, FINES, PENALTIES, COSTS, DAMAGES, LOSSES, LIENS, CAUSES OF ACTION, SUITS, DEMANDS, JUDGMENTS AND EXPENSES (INCLUDING, WITHOUT LIMITATION, COURT COSTS AND ATTORNEYS' FEES) OF ANY NATURE, KIND OR DESCRIPTION OF ANY PERSON (INCLUDING, WITHOUT LIMITATION, THE EMPLOYEES OF THE PARTIES HERETO) OR ENTITY DIRECTLY OR INDIRECTLY (COLLECTIVELY, "LIABILITIES") ARISING OUT OF, RESULTING FROM OR CAUSALLY RELATED TO (IN WHOLE OR IN PART):

(i) ANY RIGHTS OR INTERESTS GRANTED TO CONTRACTOR PURSUANT TO THIS AGREEMENT;

(ii) THE USE, OCCUPANCY OR PRESENCE OF CONTRACTOR AND CONTRACTOR PARTIES (DEFINED BELOW) AND/OR ANY WORK PERFORMED BY CONTRACTOR AND CONTRACTOR PARTIES IN, ON, OR ABOUT RAILWAY'S PROPERTY OR RIGHT-OF-WAY AND/OR THE WEST HAYMARKET PROJECT, INCLUDING, WITHOUT LIMITATION, OPERATION OF THE PEDESTRIAN BRIDGE, SECURITY FENCING, OR STORM WATER MITIGATION BY ANY CONTRACTOR PARTY (DEFINED BELOW);

(iii) ANY ENVIRONMENTAL MATTERS ARISING FROM CONTRACTOR AND/OR CONTRACTOR PARTIES' USE AND OCCUPANCY OF RAILWAY'S RIGHT-OF-WAY OR OTHER RAILWAY PROPERTY, INCLUDING WITHOUT LIMITATION USE AND OCCUPANCY OF RAILWAY'S RIGHT-OF-WAY OR OTHER RAILWAY PROPERTY IN CONNECTION WITH PERFORMANCE OF THE C&M WORK;

(iv) ANY DAMAGE TO OR DESTRUCTION OF ANY TELECOMMUNICATION LINES IN CONNECTION WITH THE WEST HAYMARKET PROJECT BY CONTRACTOR AND/OR CONTRACTOR PARTIES, INCLUDING BUT NOT LIMITED TO (A) ANY INJURY TO OR DEATH OF ANY PERSON EMPLOYED BY OR ON BEHALF OF ANY TELECOMMUNICATIONS COMPANY, AND/OR ITS CONTRACTORS, AGENTS AND/OR EMPLOYEES AS A RESULT OF SUCH DAMAGE OR DESTRUCTION, AND/OR (B) ANY CLAIM OR CAUSE OF ACTION FOR ALLEGED LOSS OF PROFITS OR REVENUE BY, OR LOSS OF SERVICE BY A CUSTOMER OR USER OF SUCH TELECOMMUNICATION COMPANY(IES) AS A RESULT OF SUCH DAMAGE OR DESTRUCTION;

(v) CONTRACTOR'S BREACH OF THE TERMS AND CONDITIONS OF THIS AGREEMENT; OR

(vi) ANY ACT OR OMISSION OF CONTRACTOR OR ITS OFFICERS, AGENTS, INVITEES, EMPLOYEES OR SUBCONTRACTORS (SUCH OFFICERS, AGENTS, INVITEES, EMPLOYEES AND SUBCONTRACTORS BEING REFERRED TO HEREIN INDIVIDUALLY AS A "CONTRACTOR PARTY" AND COLLECTIVELY, "CONTRACTOR PARTIES"), OR ANYONE DIRECTLY OR INDIRECTLY EMPLOYED BY ANY OF THEM, OR ANYONE THEY CONTROL OR EXERCISE CONTROL OVER.

THE LIABILITY ASSUMED BY CONTRACTOR WILL NOT BE AFFECTED BY THE FACT, IF IT IS A FACT, THAT ANY DAMAGE, DESTRUCTION, INJURY OR DEATH WAS OCCASIONED BY OR CONTRIBUTED TO BY THE NEGLIGENCE OF RAILWAY, ITS AGENTS, SERVANTS, EMPLOYEES OR OTHERWISE, BUT EXCLUDING CLAIMS WHOLLY CAUSED BY RAILWAY'S SOLE NEGLIGENCE AND EXCLUDING CLAIMS TO THE EXTENT THAT SUCH CLAIMS ARE CAUSED BY THE WILLFUL MISCONDUCT OR GROSS NEGLIGENCE OF RAILWAY.

FURTHER, TO THE FULLEST EXTENT PERMITTED BY LAW, CONTRACTOR AGREES, REGARDLESS OF ANY NEGLIGENCE OR ALLEGED NEGLIGENCE OF RAILWAY, TO INDEMNIFY, DEFEND AND HOLD HARMLESS RAILWAY AGAINST AND ASSUME THE DEFENSE OF ANY LIABILITIES ASSERTED AGAINST OR SUFFERED BY RAILWAY UNDER OR RELATED TO THE FEDERAL EMPLOYERS' LIABILITY ACT ("FELA") WHENEVER EMPLOYEES OF CONTRACTOR OR ANY CONTRACTOR PARTY CLAIM OR ALLEGE THAT THEY ARE EMPLOYEES OF RAILWAY OR OTHERWISE. THIS INDEMNITY SHALL ALSO EXTEND, ON THE SAME BASIS, TO FELA CLAIMS BASED ON ACTUAL OR ALLEGED VIOLATIONS OF ANY FEDERAL, STATE OR LOCAL LAWS OR REGULATIONS, INCLUDING BUT NOT LIMITED TO THE SAFETY APPLIANCE ACT, THE LOCOMOTIVE INSPECTION ACT, THE OCCUPATIONAL SAFETY AND HEALTH ACT, THE RESOURCE

CONSERVATION AND RECOVERY ACT, AND ANY SIMILAR STATE OR FEDERAL STATUTE.

Contractor further agrees, at its expense, in the name and on behalf of Railway, that it will adjust and settle all Liabilities against Railway, and will, at Railway's discretion, appear and defend any suits or actions of law or in equity brought against Railway on any claim or cause of action arising out of any liability assumed by Contractor under this Agreement for which Railway is liable or is alleged to be liable. Railway will give notice to Contractor, in writing, of the receipt or dependency of such claims and thereupon Contractor must proceed to adjust and handle to a conclusion such claims, and in the event of a suit being brought against Railway, Railway may forward summons and complaint or other process in connection therewith to Contractor, and Contractor, at Railway's discretion, must defend, adjust, or settle such suits and protect, indemnify, and save harmless Railway from and against all Liabilities arising out of any such claims or suits, provided that the foregoing indemnification obligations do not include Liabilities arising wholly out of the sole negligence of Railway or to the extent caused by the gross negligence or willful misconduct of Railway.

In addition to any other provision of this Agreement, in the event that all or any portion of this Article shall be deemed to be inapplicable for any reason, including without limitation as a result of a decision of an applicable court, legislative enactment or regulatory order, the parties agree that this Article shall be interpreted as requiring Contractor to indemnify Railway to the fullest extent permitted by applicable law. **THROUGH THIS AGREEMENT THE PARTIES EXPRESSLY INTEND FOR CONTRACTOR TO INDEMNIFY RAILWAY FOR RAILWAY'S ACTS OF NEGLIGENCE, BUT EXCLUDING CLAIMS WHOLLY CAUSED BY RAILWAY'S SOLE NEGLIGENCE AND EXCLUDING CLAIMS TO THE EXTENT THAT SUCH CLAIMS ARE CAUSED BY THE WILLFUL MISCONDUCT OR GROSS NEGLIGENCE OF RAILWAY.**

It is mutually understood and agreed that the assumption of liabilities and indemnification provided for in this Agreement survive any termination of this Agreement.

Section 2. TERM

This Agreement is effective from the date of the Contract until (i) the completion of the project set forth herein, and (ii) full and complete payment to Railway of any and all sums or other amounts owing and due hereunder.

Section 3. INSURANCE

Contractor must, at its sole cost and expense, procure and maintain during the life of this Agreement the following insurance coverage:

A. Commercial General Liability Insurance. This insurance shall contain broad form contractual liability with a combined single limit of a minimum of $2,000,000.00 per occurrence, and $4,000,000.00 in the aggregate, but in no event less than the amount otherwise carried by the Contractor. Coverage must be purchased on a post 1998 ISO occurrence form or equivalent and include coverage for, but not limited to, the following:
    - Bodily Injury and Property Damage
    - Personal Injury and Advertising Injury
    - Fire legal liability
    - Products and completed operations

This policy shall also contain the following endorsements, which shall be indicated on the certificate of insurance:

- The definition of insured contract shall be amended to remove any exclusion or other limitation for any work being done within 50 feet of railroad property.
- Waiver of subrogation in favor of and acceptable to Railroad.
- Additional insured endorsement in favor of and acceptable to Railroad.
- Separation of insureds.
- The policy shall be primary and non-contributing with respect to any insurance carried by Railroad.

It is agreed that the workers' compensation and employers' liability related exclusions in the Commercial General Liability insurance policy(s) required herein are intended to apply to employees of the policy holder and shall not apply to Railroad employees.

No other endorsements limiting coverage as respects obligations under this Agreement may be included on the policy with regard to the work being performed under this Agreement.

B. Business Automobile Insurance. This insurance shall contain a combined single limit of at least $1,000,000 per occurrence, and include coverage for, but not limited to the following:

- Bodily injury and property damage
- Any and all vehicles owned, used or hired

This policy shall also contain the following endorsements or language, which shall be indicated on the certificate of insurance:

- Waiver of subrogation in favor of and acceptable to Railroad.
- Additional insured endorsement in favor or and acceptable to Railroad.
- Separation of insureds.
- The policy shall be primary and non-contributing with respect to any insurance carried by Railroad.

C. Workers Compensation and Employers Liability Insurance. This insurance shall include coverage for, but not limited to:

- Contractor's statutory liability under the worker's compensation laws of the state(s) in which the work is to be performed. If optional under State law, the insurance must cover all employees anyway.
- Employers' Liability (Part B) with limits of at least $500,000 each accident, $500,000 by disease policy limit, $500,000 by disease each employee.

This policy shall also contain the following endorsements or language, which shall be indicated on the certificate of insurance:

- Waiver of subrogation in favor of and acceptable to Railroad.

D. Railroad Protective Liability Insurance. This insurance shall name only the Railroad as the Insured with coverage of at least $5,000,000 per occurrence and $10,000,000 in the aggregate. The policy shall be issued on a standard ISO form CG 00 35 10 93 and include the following:

- *Endorsed to include the Pollution Exclusion Amendment (ISO form CG 28 31 10 93)*
- Endorsed to include the Limited Seepage and Pollution Endorsement.

- Endorsed to remove any exclusion for punitive damages.
- No other endorsements restricting coverage may be added.
- The original policy must be provided to Railroad prior to performing any work or services under this Agreement

In lieu of providing a Railroad Protective Liability Policy, Contractor may participate in BNSF's Blanket Railroad Protective Liability Insurance Policy available to Contractor.

Other Requirements:

All policies (applying to coverage listed above) must not contain an exclusion for punitive damages and certificates of insurance must reflect that no exclusion exists.

Contractor agrees to waive its right of recovery against Railroad for all claims and suits against Railroad, except for claims and suits arising wholly out of the sole negligence, or to the extent caused by the gross negligence or willful misconduct, of Railroad. In addition, its insurers, through the terms of the policy or policy endorsement, waive their right of subrogation against Railroad for all claims and suits, except for claims and suits arising wholly out of the sole negligence, or to the extent caused by the gross negligence of willful misconduct, of Railroad. The certificate of insurance must reflect the waiver of subrogation endorsement. Contractor further waives its right of recovery, and its insurers also waive their right of subrogation against Railroad for loss of its owned or leased property or property under Contractor's care, custody or control, except for the right of recovery or right of subrogation arising wholly out of the sole negligence, or to the extent caused by the gross negligence or willful misconduct, of Railroad.

Contractor is not allowed to self-insure without the prior written consent of Railroad. If granted by Railroad, any deductible, self-insured retention or other financial responsibility for claims must be covered directly by Contractor in lieu of insurance. Any and all Railroad liabilities that would otherwise, in accordance with the provisions of this Agreement, be covered by Contractor's insurance will be covered as if Contractor elected not to include a deductible, self-insured retention or other financial responsibility for claims.

Prior to commencing the C&M Work, Contractor must furnish to Railroad acceptable certificate(s) of insurance including an original signature of the authorized representative evidencing the required coverage, endorsements, and amendments. The policy(ies) must contain a provision that obligates the insurance company(ies) issuing such policy(ies) to notify Railroad in writing at least 30 days prior to any cancellation, non-renewal, substitution or material alteration. This cancellation provision must be indicated on the certificate of insurance. Upon request from Railroad, a certified duplicate original of any required policy must be furnished. Certificate(s) should be sent to the following address:

Ebix BPO
PO Box 12010-BN
Hemet, CA 92546-8010
Fax number: 951-652-2882
Email: bnsf@ebix.com

Any insurance policy must be written by a reputable insurance company reasonably acceptable to Railroad or with a current Best's Guide Rating of A- and Class VII or better, and authorized to do business in the state(s) in which the service is to be provided.

Contractor represents that this Agreement has been thoroughly reviewed by Contractor's insurance agent(s)/broker(s), who have been instructed by Contractor to procure the insurance coverage required by this Agreement. Allocated Loss Expense must be in addition to all policy limits for coverages referenced above.

Not more frequently than once every five years, Railroad may reasonably modify the required insurance coverage to reflect then-current risk management practices in the railroad industry and underwriting practices in the insurance industry.

If any portion of the operation is to be subcontracted by Contractor, Contractor must require that its subcontractors provide and maintain the insurance coverages set forth herein, naming Railroad as an additional insured, and requiring that the subcontractors release, defend and indemnify Railroad to the same extent and under the same terms and conditions as Contractor is required to release, defend and indemnify Railroad herein.

Failure to provide evidence as required by this section will entitle, but not require, Railroad to immediately suspend work under this Agreement until such evidence is provided. Acceptance of a certificate that does not comply with this section will not operate as a waiver of Contractor's obligations hereunder.

The fact that insurance (including, without limitation, self-insurance) is obtained by Contractor will not be deemed to release or diminish the liability of Contractor including, without limitation, liability under the indemnity provisions of this Agreement. Damages recoverable by Railroad will not be limited by the amount of the required insurance coverage.

For purposes of this section, Railroad means "Burlington Northern Santa Fe, LLC", "BNSF Railway Company" and the subsidiaries, successors, assigns and affiliates of each.

Section 4. EXHIBIT C CONTRACTOR REQUIREMENTS

The Contractor must observe and comply with all provisions, obligations, requirements and limitations contained in the Contract, and the Contractor Requirements set forth on Exhibit C attached to this Agreement and the Contract, including, but not be limited to, payment of all costs incurred for any damages to Railway roadbed, tracks, and/or appurtenances thereto, resulting from use, occupancy, or presence of its employees, representatives, or agents or subcontractors on or about the construction site.

Section 5. TRAIN DELAY

Contractor is responsible for and hereby indemnifies and holds harmless Railway (including its affiliated railway companies, and its tenants) for, from and against all damages arising from any unscheduled delay to a freight or passenger train which affects Railway's ability to fully utilize its equipment and to meet customer service and contract obligations. Contractor will be billed, as further provided below, for the economic losses arising from loss of use of equipment, contractual loss of incentive pay and bonuses and contractual penalties resulting from train delays, whether caused by Contractor, or subcontractors, or by the Railway performing work under this Agreement. Railway agrees that it will not perform any act to unnecessarily cause train delay.

For loss of use of equipment, Contractor will be billed the current freight train hour rate per train as determined from Railway's records. Any disruption to train traffic may cause delays to multiple trains at the same time for the same period.

Additionally, the parties acknowledge that passenger, U.S. mail trains and certain other grain, intermodal, coal and freight trains operate under incentive/penalty contracts between Railway and its customer(s). Under these arrangements, if Railway does not meet its contract service commitments, Railway may suffer loss of performance or incentive pay and/or be subject to penalty payments. Contractor is responsible for any train performance and incentive penalties or other contractual economic losses actually incurred by Railway which are attributable to a train delay caused by Contractor or its subcontractors.

The contractual relationship between Railway and its customers is proprietary and confidential. In the event of a train delay covered by this Agreement, Railway will share information relevant to any train delay to the extent consistent with Railway confidentiality obligations. Damages for train delay are currently $382.20 per hour per incident. **THE RATE THEN IN EFFECT AT THE TIME OF PERFORMANCE BY THE CONTRACTOR HEREUNDER WILL BE USED TO CALCULATE THE ACTUAL COSTS OF TRAIN DELAY PURSUANT TO THIS AGREEMENT.**

Contractor and its subcontractors must give Railway's Project Engineer (402) 458-7537 thirty (30) days' minimum advance notice of the times and dates for proposed work windows. Railway and Contractor will establish mutually agreeable work windows for the project. Railway has the right at any time to revise or change the work windows due to train operations or service obligations. Railway will not be responsible for any additional costs or expenses resulting from a change in work windows. Additional costs or expenses resulting from a change in work windows shall be accounted for in Contractor's expenses for the project.

Contractor and subcontractors must plan, schedule, coordinate and conduct all Contractor's work so as to not cause any delays to any trains.

[Signature page follows]

Kindly acknowledge receipt of this letter by signing and returning to the Railway two original copies of this letter, which, upon execution by Railway, will constitute an Agreement between us.

_____	
(Contractor)	**BNSF Railway Company**
By:_____	By:_____
Printed Name: _____	Name:_____
Title:_____	*Project Engineer*
Contact Person: _____	Accepted and effective this _____day of 20__.
Address: _____	
_____	
City:_____ State:___ Zip:____	
Fax: _____	
Phone: _____	
E-mail:_____	

EXHIBIT D

Final Clearances

Pursuant to the provisions of **Section 3.1.3** of the C&M Agreement, approved Final Clearances for each segment of City C&M Work being constructed pursuant to the City Work Final Design are attached hereto as **Exhibit D**.

EXHIBIT E

Soil Management Plan

In addition to and not in limitation of the requirements and obligations of City and City Contractors contained in the C&M Agreement, the following requirements shall apply to City and City Contractors with respect to management of impacted environmental media. In the event of conflicts between the terms of this **Exhibit E** and the rest of the C&M Agreement, including but not limited to the provisions of **Exhibit C** and, as applicable, **Exhibit C-1(A)** or **Exhibit C-1(B)**, the most restrictive provisions shall apply to City and City Contractors.

Proper Management of Impacted Media

1. Access

Access to the West Haymarket Redevelopment Site (WHRS) is restricted to railroad and City of Lincoln personnel and contractors conducting work in their official capacity as employees or contractors of their respective organizations. Access to Railroad operating property for purposes of providing construction – related services is subject to specific safety and rules training certifications and requirements found at: **www.contractororientation.com**. Access to other non-railroad private property for purposes of performing construction – related services within the WHRS must be arranged through the EPMT.

2. Management Practices

Due to the potential risks and penalties involved in management of impacted media and protection of rare and unique saline wetlands as well as the wide applicability of these issues to planned construction activity, prescriptive management practices for these areas are as follows:

2.1 Impacted Soil and Debris Management

Attachment 3 - NDEQ Environmental Guidance Document 05-061 "Investigation Derived Waste and Remediation Considerations" (GD 05-061) is provided as reference. Relevant and critical points extracted from GD 05-061 as well as NDEQ's Title 132 (Integrated Solid Waste Management Regulations) for purposes of implementation and compliance is as follows:

1. A fundamental premise regarding the regulatory status of any soils, debris or other media encountered during intrusive activities is that such items are not considered waste material until determined by the Project Manager in consultation with the Technical Representative to be no longer suitable for its intended purpose.

2. Title 132, Chapter 1, Section 041 defines fill as: "*solid waste that consists only of one or more of the following: sand, gravel, stone, soil, rock, brick, concrete rubble, asphalt rubble, or similar material*".

3. The "*use of fill for legitimate land improvement (backfilling a foundation) is allowed per Title 132, Chapter 2, Section 002.01 as long as the fill is not mixed with other solid wastes that have the potential to cause contamination that may threaten human health or the environment*".

4. From pg. 2 of NDEQ GD 05-161: "*Activity not related to investigation or remediation is not considered "active management" under the waste regulations. For example, routine trench or foundation excavation spoils that are generated at a site that is not a remediation or investigation activity site or are not related to remediation or investigation activities are not considered a waste unless it is intended for disposal. Such spoils could normally be replaced in the excavation.*"

5. Prior to initiation of each construction task, the project manager will consult with the technical representative to determine the type of material anticipated to be excavated, potential

contaminants of concern (if any) and allowable re-use (including use as fill), alternatives to be employed for excess soil or debris to be generated associated with his/her respective work task. The project manager will work with the construction representative and advise where excess soils or debris shall be stored. Provisions for temporary storage of potentially impacted soil/debris must be explicitly agreed upon.

2.2 Grading/Excavation

Construction grading and excavation activities associated with applicable WHRS project activities require coordination and compliance as follows:

1. Grading/excavation project manager/contractor's representative (PM/CR) must contact the Technical Representative (TR) at least 14 days prior to initiation of grading/excavation work to discuss anticipated conditions and any special precautions to consider.

2. The PM/CR must arrange for all utility clearance.

3. The PM/CR must meet with the TR to discuss task – specific precautions (as detailed in any and all applicable work activities described in this Section).

4. A TR must be on-site or on call to respond to questions or observations that could require sampling or determinations relevant to management of impacted soil or debris. ***It is the responsibility of the PM/CR to notify the TR of construction schedules and activities (including any changes in schedules or scope of work effort) that may require on-site support and observation***.

5. Unless superseded by other special considerations, grading/excavation activities may proceed per the contractual project/task plans and specifications.

6. Changing field considerations and observations (including encountering suspect soils/debris/other media or modifications of proposed areas/volumes of soil grading/excavation/filling) must be reported to the TR.

7. If during execution of contractual plans and specifications the PM/CR determines the need to manage excess soils/debris/other media) not previously addressed, the PM/CR will consult with the TR to discuss management of affected media. Resolution and ultimate fate of the affected media will be documented by the TR.

8. Work shutdown will be at the discretion of the PM/CR's corporate health and safety policies and practices.

2.3 Utility Work

Contractors performing utility work including all intrusive work (trenching, boring, digging, etc.) where surface features (soil, concrete, asphalt, vegetated surfaces) will be disturbed require conformance to the following procedures:

1. The utility project manager/contractor's representative (PM/CR) must contact the TR at least 14 days prior to initiation of intrusive utility work to discuss anticipated conditions and any special precautions to consider.

2. The PM/CR must arrange for all related utility clearance.

3. The PM/CR must meet with the TR to discuss task – specific precautions (as detailed in any and all applicable work activities described in this Section).

4. A TR must be on-site or on call to respond to questions or observations that could require sampling or determinations relevant to management of impacted soil or debris. ***It is the***

responsibility of the PM/CR to notify the TR of construction schedules and activities (including any changes in schedules or scope of work effort) that may require on-site support and observation.

5. Unless superseded by other special considerations, utility construction activities may proceed per the contractual project/task plans and specifications.

6. Changing field considerations and observations (including encountering suspect soils/debris/other media or modifications of proposed routes of utility corridors) must be immediately reported to the TR.

7. In general, soil/debris/spoils which will not be removed from the site can be used as backfill around utilities if determined by the PM/CR to be suitable fill material and the material has no appearance of contamination or odor. Soil/debris/spoils removed during the course of intrusive utility work with an appearance of contamination or odor will be immediately notified to the TR for consultation and resolution including temporary storage of the suspect material.

8. If during execution of contractual plans and specifications the PM/CR determines there is a need to manage excess soils/debris/other media) not previously addressed, the PM/CR will consult with the TR to discuss management of affected media. Resolution and ultimate fate of the affected media will be documented by the TR.

9. Work shutdown will be at the discretion of the PM/CR's corporate health and safety policies and practices.

SPILL/INCIDENT RESPONSE REFERRAL SHEET

SPILL REPORTING

First Call:

Environmental Project Management Team Technical Representatives:

Frank Uhlarik – Alfred Benesch & Company:	**402-333-5792**
	Cell: 402-669-0546
Alternate:	
Bill Imig – Olsson Associates:	**402-458-5903**
	Cell: 402-314-4568
Alternate:	
Miki Esposito – Environmental Project Management Team:	**402-441-6173**

Agencies/Railroad Authorities:

Nebraska Department of Environmental Quality:	**402-471-2186 or 877-253-2603**

After Hours, Weekends and Holidays:

Nebraska State Patrol Dispatch:	**402-471-4545**
BNSF Railway Company Resource Operations Center:	**800-832-5452**
Union Pacific Railroad Security:	**888-877-7267**
National Response Center:	**800-424-8802**

ALL OTHER INCIDENTS

Fire and Police: **Dial 911**

LIST OF ACRONYMS

CR	Contractor's Representative
SMP	Soil Management Plan
EPMT	City of Lincoln Environmental Project Management Team
PM	Project Manager
TR	Environmental Project Management Team Technical Representative
WHRS	West Haymarket Redevelopment Site

EXHIBIT D

Other Contract Documents

COMMENTARY TO ACCOMPANY CONSTRUCTION BONDS

A. GENERAL INFORMATION
There are two types of construction bonds that are required by statutes for public work in many jurisdictions and are widely used for other projects as well.

Construction Performance Bond
Construction Payment Bond

The Construction Performance Bond is an instrument that is used to assure the availability of funds to complete the construction.

The Construction Payment Bond is an instrument that is used to assure the availability of sufficient funds to pay for labor, materials and equipment used in the construction. For public work the Construction Payment Bond provides rights of recovery for workers and suppliers similar to their rights under the mechanics lien laws applying to private work.

The objective underlying the re-writing of construction bond forms was to make them more understandable to provide guidance to users. The intention was to define the rights and responsibilities of the parties, without changing the traditional rights and responsibilities that have been decided by the courts. The new bond forms provide helpful guidance regarding time periods for various notices and actions and clarify the extent of available remedies.

The concept of pre-default meeting has been incorporated into the Construction Performance Bond. All of the participants favored early and informal resolution of the problems that may precipitate a default, but some Surety companies were reluctant to participate in pre-default settings absent specific authorization in the bond form.

The responsibilities of the Owner and the options available to the Surety when a default occurs are set forth in the Construction Performance Bond. Procedures for making a claim under the Construction Payment Bond are set forth in the form.

EJCDC recommends the use of two separate bonds rather than a combined form. Normally the amount of each bond is 100 percent of the contract amount. The bonds have different purposes and are separate and distinct obligations of the Surety. The Surety Association reports that the usual practice is to charge a single premium for both bonds and there is no reduction in premium for using a combined form or for issuing one bond without the other.

B. COMPLETING THE FORMS
Bonds have important legal consequences; consultation with an attorney and a bond specialist is encouraged with respect to federal, state and local laws applicable to bonds and with respect to completing or modifying the bond forms.

Both bond forms have a similar format and the information to be filled in is ordinarily the same on both bonds. If modification is necessary, the modifications may be different.

The bond forms are prepared for execution by the Contractor and the Surety. Evidence of authority to bind the Surety is usually provided in the form of a power of attorney designating the agent who is authorized to sign on behalf of the Surety. The power of attorney should be filed with the signed bonds.

Each bond must be executed separately since they cover separate and distinct obligations.

Preferably the bond date should be the same date as the contract, but in no case should the bond date precede the date of the contract.

CONSTRUCTION PERFORMANCE BOND

Any singular reference to Contractor, Surety, Owner or other party shall be considered plural where applicable.

CONTRACTOR (Name and Address):

SURETY (Name and Principal Place of Business):

Owner (Name and Address):
West Haymarket Joint Public Agency
555 South 10th St.
Lincoln, NE 68508

CONSTRUCTION CONTRACT
Date:
Amount:

Description (Name and Location):
For all labor, material and equipment necessary for (Bid Name and Number)

BOND
Date:
Amount:
Modifications to this Bond Form:

CONTRACTOR AS PRINCIPAL
Company: (Corp. Seal)

SURETY
Company: (Corp.Seal)

Signature:_____
Name and Title: Name and Title:

Signature:_____

EJCDC NO. 1910-28a (1984 Edition)
Prepared through the joint efforts of The Surety Assoc. of America. Engineers' Joint Contract Documents Committee. The Associated General Contractors of America, and the American Institute of Architects.

1. The Contractor and the Surety, jointly and severally, bind themselves their heirs, executors, administrators, successors and assigns to the Owner for the performance of the Construction Contract, which is incorporated herein by reference.

2. If the Contractor performs the Construction Contract, the Surety and the Contractor shall have no obligation under this Bond, except to participate in conferences as provided in Subparagraph 3.1.

3. If there is no Owner Default, the Surety's obligation under this Bond shall arise after:

3.1 The Owner has notified the Contractor and the Surety at its address described in Paragraph 10 below, that the Owner is considering declaring a Contractor Default and has requested and attempted to arrange a conference with the Contractor and the Surety to be held not later than fifteen days after receipt of such notice to discuss methods of performing the Construction Contract. If the Owner, the Contractor and the Surety agree, the Contractor shall be allowed a reasonable time to perform the Construction Contract, but such an agreement shall not waive the Owner's right, if any, subsequently to declare a Contractor Default and

3.2 The Owner has declared a Contractor Default and formally terminated the Contractor's right to complete the contract. Such Contractor Default shall not be declared earlier than twenty days after the Contractor and the Surety have received notice as provided in Sub-paragraph 3.1; and

3.3 The Owner has agreed to pay the Balance of the Contract Price to the Surety in accordance with the terms of the Construction Contract or to a contractor selected to perform the Construction Contract in accordance with the terms of the contract with the Owner.

4. When the Owner has satisfied the conditions of Paragraph 3, the Surety shall promptly and at the Surety's expense take one of the following actions:

4.1 Arrange for the Contractor, with consent of the Owner, to perform and complete the Construction Contract, or

4.2 Undertake to perform and complete the Construction Contract itself, through its agents or through independent contractors: or

4.3 Obtain bids or negotiated proposals from qualified contractors acceptable to the Owner for a contract for performance and completion of the Construction Contract, arrange for a contract to be prepared for execution by the Owner and the contractor selected with the Owner's concurrence, to be secured with performance and payment bonds executed by a qualified surety equivalent to the bonds issued on the Construction Contract, and pay to the Owner the amount of damages as described in Paragraph 6 in excess of the Balance of the Contract Price incurred by the Owner resulting from the Contractor's default, or

4.4 Waive its right to perform and complete, arrange for completion, or obtain a new contractor and with reasonable promptness under the circumstances:

1. After investigation, determine the amount for which it may be liable to the Owner and as soon as practiceable after the amount is determined tender payment therefore to the Owner; or

2. Deny liability in whole or in part and notify the Owner citing reasons therefore.

5. If the Surety does not proceed as provided in Paragraph 4 with reasonable promptness, the Surety shall be deemed to be in default on this Bond fifteen days after receipt of an additional written notice from the Owner to the Surety demanding that the Surety perform its obligations under this Bond, and the Owner shall be entitled to enforce any remedy available to the Owner. If the Surety proceeds as provided in Subparagraph 4.4 and the Owner refuses payment tendered or the Surety has denied liability, in whole or in part, without further notice the Owner shall be entitled to enforce any remedy available to the Owner.

6. After the Owner has terminated the Contractor's right to complete the Construction Contract, and if the Surety elects to act under Subparagraph 4.1, 4.2, or 4.3 above, then the responsibilities of the Surety to the Owner shall not be greater than those of the Contractor under the Construction Contract, and the responsibilities of the Owner to the Surety shall not be greater than those of the Owner under the Construction Contract. To the limit of the amount of this Bond, but subject to commitment by the Owner of the Balance of the Contract Price to mitigation of costs and damages on the Construction Contract, the Surety is obligated without duplication for:

6.1 The responsibilities of the Contractor for correction of defective work and completion of the Construction Contract;

6.2 Additional legal, design professional and delay costs resulting from the Contractor's Default, and resulting from the actions or failure to act of the Surety under Paragraph 4; an d

6.3 Liquidated damages, or if no liquidated damages are specified in the Construction Contract, actual damages caused by delayed performance or non-performance of the Contractor.

7. The Surety shall not be liable to the Owner or others for obligations of the Contractor that are unrelated to the Construction Contract, and the Balance of the Contract Price shall not be reduced or set off on account of any such unrelated obligations. No right of action shall accrue on this Bond to any person or entity other than the Owner or its heirs, executors, administrators, or successors.

8. The Surety hereby waives notice of any change, including changes of time, to the Construction Contract or to related sub-contracts, purchase orders and other obligations.

9. Any proceeding, legal or equitable, under this Bond may be instituted in any court of competent jurisdiction in the location in which the work or part of the work is located and shall be instituted within two years after Contractor Default or within two years after the Contractor ceased working or within two years after the Surety refuses or fails to perform its obligations under this Bond, whichever occurs first. If the provisions of this Paragraph are void or prohibited by law, the minimum period of limitation available to sureties as a defense in the jurisdiction of the suit shall be applicable.

10. Notice to the Surety, the Owner or the Contractor shall be mailed or delivered to the address shown on the signature page.

11. When this Bond has been furnished to comply with a satutory or other legal requirement in the location where the construction was to be performed, any provision in this Bond conflicting with said statutory or legal requirement shall be deemed deleted herefrom and provisions conforming to such statutory or other legal requirement shall be deemed incorporated herein. The intent is that this Bond shall be construed as a statutory bond and not as a common law bond.

12. Definitions.

12.1 Balance of the Contract Price: The total amount payable by the Owner to the Contractor under the Construction Contract after all proper adjustments have been made, including allowance to the Contractor of any amounts received or to be received by the Owner in settlement of insurance or other claims for damages to which the Contractor is entitled, reduced by all valid and proper payments made to or on behalf of the Contractor under the Construction Contract.

12.2 Construction Contract: The agreement between the Owner and the Contractor identified on the signature page, including all Contract Documents and changes thereto.

12.3 Contractor Default: Failure of the Contractor, which has neither been remedied nor waived, to perform or otherwise to comply with the terms of the Construction Contract.

12.4 Owner Default: Failure of the Owner, which has neither been remedied nor waived, to pay the Contractor as required by the Construction Contract or to perform and complete or comply with the other terms thereof.

CONSTRUCTION PAYMENT BOND

Any singular reference to Contractor, Surety, Owner or other party shall be considered plural where applicable.

CONTRACTOR (Name and Address):

SURETY (Name and Principal Place Of Business):

Owner (Name and Address):
West Haymarket Joint Public Agency
555 South 10th St.
Lincoln, NE 68508

CONSTRUCTION CONTRACT
Date:
Amount:

Description (Name and Location):
For all labor, material and equipment necessary for (Bid Name and Number)

BOND
Date:
Amount:

Modifications to this Bond Form:

CONTRACTOR AS PRINCIPAL
Company: (Corp. Seal)

SURETY
Company: (Corp. Seal)

Signature: _____

Name and Title:

Signature: _____

Name and Title:

EJCDC NO. 1910-28B (1984 Edition)
Prepared through the joint efforts of The Surety Assoc. of America. Engineers' Joint Contract Documents Committee. The Associated General Contractors of America, and the American Institute of Architects.

1. The Contractor and the Surety, jointly and severally, bind themselves their heirs, executors, administrators, successors and assigns to the Owner to pay for labor, materials and equipment furnished for use in the performance of the Construction Contract, which is incorporated herein by reference.
2. With respect to the Owner, this obligation shall be null and void if the Contractor:

   2.1 Promptly makes payment, directly or indirectly, for all sums due Claimants, and

   2.2 Defends, indemnifies and holds harmless the Owner from all claims, demands, liens or suits by any person or entity who furnished labor, materials or equipment for use in the performance of the Construction Contract, provided the Owner has promptly notified the Contractor and the Surety (at the address described in Paragraph 12) of any claims, demands, liens or suits and tendered defense of such claims, demands, liens or suits to the Contractor and the Surety, and provided there is no Owner Default.
3. With respect to Claimants, this obligation shall be null and void if the Contractor promptly makes payment, directly or indirectly, for all sums due.
4. The Surety shall have no obligation to Claimants under this Bond until:

   4.1 Claimants who do not have a direct contract with the Contractor have given notice to the Surety (at the address described in Paragraph 12) and sent a copy, or notice thereof to the Owner, stating that a claim is being made under this Bond and with substantial accuracy the amount of the claim.

   4.2 Claimants who do not have a direct contract with the Contractor:

   1.Have furnished written notice to the Contractor and sent a copy, or notice thereof, to the Owner, within 90 days after having last performed labor or last furnished materials or equipment included in the claim stating, with substantial accuracy, the amount of the claim and the name of the party to whom the materials were furnished or supplied or for whom the labor was done or performed, and

   2.Have either received a rejection in whole or in part from the Contractor, or not received within 30 days of furnishing the above notice any communication from the Contractor by which the Contractor has indicated the claim will be paid directly or indirectly; and

   3.Not having been paid within the above 30 days, have sent a written notice to the Surety (at the address described in Paragraph 12) and sent a copy, or notice thereof, to the Owner, stating that a claim is being made under this Bond and enclosing a copy of the previous written notice furnished to the Contractor.
5. If a notice required by Paragraph 4 is given by the Owner to the Contractor or to the Surety, that is sufficient compliance.
6. When the Claimant has satisfied the conditions of Paragraph 4, the Surety shall promptly and at the Surety's expense take the following actions:

   6.1 Send an answer to the Claimant, with a copy to the Owner, within 45 days after receipt of the claim, stating the amounts that are undisputed and the basis for challenging any amounts that are disputed.

   6.2 Pay or arrange for payment of any undisputed amounts.
7. The Surety's total obligation shall not exceed the amount of this Bond, and the amount of this Bond shall be credited for any payments made in good faith by the Surety.
8. Amounts owed by the Owner to the Contractor under the Construction Contract shall be used for the performance of the Construction Contract and to satisfy claims, if any, under any Construction Performance Bond. By the Contractor furnishing and the Owner accepting this Bond, they agree that all funds earned by the Contractor in the performance of the Construction Contract are dedicated to satisfy obligations of the Contractor and the Surety under this Bond, subject to the Owner's priority to the funds for the completion of the work.
9. The Surety shall not be liable to the Owner, Claimants or others for obligations of the Contractor that are unrelated to the Construction Contract. The Owner shall not be liable for payment of any costs or expenses of any Claimant under this Bond, and shall have under this Bond no obligations to make payments to, give notices on behalf of, or otherwise have obligations to Claimants under this Bond.
10. The Surety hereby waives notice of any change, including changes of time, to the Construction Contract or to related subcontracts, purchase orders and other obligations.
11. No suite or action shall be commenced by a Claimant under this Bond other than in a court of competent jurisdiction in the location in which the work or part of the work is located or after the expiration of one year from the date (1) on which the Claimant gave the notice required by Subparagraph 4.1 or Clause 4.1 (iii), or (2) on which the last labor or service was performed by anyone or the last materials or equipment were furnished by anyone under the Construction Contract, whichever of (1) or (2) first occurs. If the provisions of this Paragraph are void or prohibited by law, the minimum period of limitation available to sureties as a defense in the jurisdiction of the suit shall be applicable.
12. Notice to the Surety, the Owner or the Contractor shall be mailed or delivered to the address shown on the signature page. Actual receipt of notice by Surety, the Owner or the Contractor, however accomplished, shall be sufficient compliance as of the date received at the address shown on the signature page.
13. When this Bond has been furnished to comply with a statutory or other legal requirement in the location where the construction was to be performed, any provision in this Bond conflicting with said statutory or legal requirement shall be deemed deleted here from and provisions conforming to such statutory or other legal requirement shall be deemed incorporated herein. The intent is, that this Bond shall be construed as a statutory bond and not as a common law bond.
14. Upon request by any person or entity appearing to be a potential beneficiary of this Bond, the Contractor shall promptly furnish a copy of this Bond or shall permit a copy to be made.
15. DEFINITIONS

    15.1 Claimant: An individual or entity having a direct contract with the Contractor or with a subcontractor of the Contractor to furnish labor, materials or equipment for use in the performance of the Contract. The intent of this Bond shall be to include without limitation in the terms "labor, materials, or equipment" that part of water, gas, power, light, heat, oil, gasoline, telephone service or rental equipment used in the Construction Contract, architectural and engineering services required for performance of the work of the Contractor and the Contractor's subcontractors, and all other items for which a mechanic's lien may be asserted in the jurisdiction where the labor, materials or equipment were furnished.

    15.2 Construction Contract: The agreement between the Owner and the Contractor identified on the signature page, including all Contract Documents and changes thereto.

    15.3 Owner Default: Failure of the Owner, which has neither been remedied nor waived, to pay the Contractor as required by the Construction Contract or to perform and complete or comply with the other terms thereof.

(FOR INFORMATION ONLY - NAME, ADDRESS AND TELEPHONE)
AGENT OR BROKER: OWNER'S REPRESENTATIVE (ARCHITECT, ENGINEER OR OTHER PARTY)

INDEMNIFICATION AND INSURANCE REQUIREMENTS
FOR ALL WEST HAYMARKET JOINT
PUBLIC AGENCY CONTRACTS

1. INDEMNIFICATION

A. **Indemnification of JPA**

TO THE FULLEST EXTENT PERMITTED BY LAW, CONTRACTOR SHALL RELEASE, INDEMNIFY, DEFEND AND HOLD HARMLESS JPA AND JPA'S MEMBERS, SUCCESSORS, ASSIGNS, LEGAL REPRESENTATIVES, OFFICERS, EMPLOYEES AND AGENTS FOR, FROM AND AGAINST ANY AND ALL CLAIMS, LIABILITIES, FINES, PENALTIES, COSTS, DAMAGES, LOSSES, LIENS, CAUSES OF ACTION, SUITS, DEMANDS, JUDGMENTS AND EXPENSES (INCLUDING, WITHOUT LIMITATION, COURT COSTS AND ATTORNEYS' FEES) OF ANY NATURE, KIND OR DESCRIPTION OF ANY PERSON (INCLUDING, WITHOUT LIMITATION, THE EMPLOYEES OF THE PARTIES HERETO) (COLLECTIVELY, "LIABILITIES") ARISING OUT OF, RESULTING FROM OR CAUSALLY RELATED TO (IN WHOLE OR IN PART), PERFORMANCE OF THE CONTRACT THAT RESULTS IN BODILY INJURY, SICKNESS, DISEASE, OR DEATH CAUSED IN WHOLE OR IN PART BY ANY ACT OR OMMISSION OF THE CONTRACTOR, ANY SUBCONTRACTOR, ANYONE DIRECTLY OR INDIRECTLY EMPLOYED BY ANY OF THEM, OR ANYONE FOR WHOSE ACTS ANY OF THEM MAY BE LIABLE WHETHER OR NOT IT IS CAUSED IN WHOLE OR PART BY A PARTY INDEMNIFIED HEREUNDER.

Such indemnification shall not be construed to negate, abridge, limit or otherwise reduce any other right or obligation of indemnity which would otherwise exist as to any party or person described in this section.

B. In any and all claims by any employee (whether an employee of the Contractor or subcontractor, or their respective agents or assigns or by anyone directly or indirectly employed by any of them or anyone for whose acts any of them may be liable as an employer) in whole or in part against JPA, its officers, agents, employees, volunteers or consultants, the above indemnification shall not be limited in any way by the amount of damages, compensation, benefits or other contributions payable by or on behalf of a the employer under Worker's Compensation statutes, disability benefit acts, or any other employee benefit or payment acts as the case may be.

C. The obligations of indemnification herein shall not include or extend to:

(1) Any outside engineer's or architect's professional errors and omissions involving the approval or furnishing of maps, drawings, opinions, reports, surveys, change orders, designs or specifications within the scope of professional services provided to JPA and related to the Contract; and

(2) Any claims wholly caused by the JPA's sole negligence and excluding claims to the extent such claims are caused by the willful misconduct or gross negligence of the JPA.

D. In the event of any litigation of any such claims shall be commenced against JPA, Contractor shall defend the same at Contractor's sole expense upon notice thereof from JPA. Contractor shall notify the insuring company that JPA reserves and does not waive any statutory or governmental immunity and neither Contractor, nor Contractor's counsel whether employed by Contractor or by an insurer on behalf of the Contractor shall waive such defenses or enter into any settlement or other disposition requiring waiver of any defenses or immunity of JPA without the express written consent of the JPA.

2. INSURANCE GENERAL PROVISIONS

A. **Approved Coverage Prior to Commencing Work/Subcontractors Included.** Contractor shall purchase and maintain in place insurance to protect Contractor and JPA, its officers, agents, employees, volunteers and consultants from and against all liabilities and hazards as provided in these insurance requirements throughout the duration of the Contract. Contractor shall not commence work under this contract until the Contractor has obtained all insurance required under Section 2. below and such insurance has been approved by the City Attorney for JPA, nor shall the Contractor allow any subcontractor to commence work on any subcontract until all similar insurance required of the subcontractor has been so obtained and approved.

B. **Occurrence Basis Coverage.** All insurance shall be provided on an occurrence basis and not on a claims made basis, except for hazardous materials, errors and omissions, or other coverage not reasonably available on an occurrence basis; provided that all such claims made coverage is subject to the prior written approval of the City Attorney and must be clearly indicated as such in any certificate showing coverage.

C. **Authorized and Rated Insurers Required.** All insurance coverage are to be placed with insurers authorized to do business in the State of Nebraska and must be placed with an insurer that has an A.M. Best's Rating of no less than A:VII unless specific approval has been granted by the City Attorney.

D. **Certificates Showing Coverage**. Prior to commencing the Work, Contractor must furnish to JPA adequate written documentation including certificate(s) of insurance, which have the original signature of the authorized representative, declaration pages or other acceptable policy information evidencing the required coverage, endorsements, and amendments. The policy(ies) must contain a provision that obligates the insurance company(ies) issuing such policy(ies) to notify JPA in writing at least 30 days prior to any cancellation, except that only ten (10) days prior notice is required for cancellation due to nonpayment of premium. Upon request from JPA, a certified duplicate original of any required policy must be furnished. Certificate(s) should be sent to the following address:

West Haymarket Joint Public Agency
c/o City Attorney
City of Lincoln, Nebraska
555 South 10th Street
Lincoln, NE 68508

Certificates of insurance may utilize an appropriate standard ACORD Certificate of Insurance form showing the specific limits of insurance coverage required by this Article; provided that restrictions, qualifications or declarations inconsistent with the requirements of this Article shall not relieve the Contractor from providing insurance as required herein. Such certificates shall show JPA as additional insured except for applicable Worker's Compensation coverage, to include all work performed for JPA and specifically including, but not limited to, any liability caused or contributed to by the act, error, or omission of the Contractor, including any related subcontractors, third parties, agents, employees, officers or assigns of any of them. The inclusion of JPA as additional insured shall be for coverage only on a primary basis for liability coverage, and no coverage shall contain a policy or other restriction or attempt to provide restricted coverage for JPA, whether on an excess, contributory or other basis regardless of any other insurance coverage available to JPA, including by specific endorsement where necessary, as indicated in the following requirements.

E. **Terminology.** The terms "insurance," "insurance policy," or "coverage" as used in this article are used interchangeably and shall have the same meaning as "insurance" unless the context clearly requires otherwise. References to "ISO®" forms are merely for convenience and ease of reference, and an equivalent or better form as determined acceptable by the City Attorney may be used. (Note: ISO® is a registered trademark of ISO Properties, Inc.)

F. **Other Requirements**. Contractor agrees to waive its right of recovery against JPA for all claims and suits against JPA, except for claims and suits arising wholly out of the sole negligence, or to the extent caused by the gross negligence or willful misconduct, of JPA. In addition, its insurers, through the terms of the policy or policy endorsement, waive their right of subrogation against JPA for all claims and suits, except for claims and suits arising wholly out of the sole negligence, or to the extent caused by the gross negligence of willful misconduct, of JPA. The certificate of insurance must reflect the waiver of subrogation endorsement. Contractor further waives its right of recovery, and its insurers also waive their right of subrogation against JPA for loss of its owned or leased property or property under Contractor's care, custody or control, except for the right of recovery or right of subrogation arising wholly out of the sole negligence, or to the extent caused by the gross negligence or willful misconduct, of JPA.

Contractor is not allowed to self-insure without the prior written consent of JPA. If granted by JPA, any deductible, self-insured retention or other financial responsibility for claims must be covered directly by Contractor in lieu of insurance. Any and all JPA liabilities that would otherwise, in accordance with the provisions of this Agreement, be covered by Contractor's insurance will be covered as if Contractor elected not to include a deductible, self-insured retention or other financial responsibility for claims.

Upon notification to JPA of cancellation, non-removal, substitution or material alteration of any such policy(ies), JPA shall have the option to (i) if feasible, pay, on behalf of the Contractor, any and all such premiums, penalties, fees for expenses necessary to keep such policy(ies) in full force and effect; or (ii) in the event that such policy(ies) cannot be kept in full force and effect, enter into the open market to procure such policy(ies) of insurance on behalf of Contractor as required by this Agreement at the then current market rate. Upon any of the above occurrences, JPA shall invoice the Contractor for reimbursement of such premiums, penalties, fees, or expenses advanced on the JPA's behalf plus an additional fifteen percent (15%) of such advanced amounts as remuneration for JPA's overhead. Such amounts advanced by JPA shall be paid by the Contractor within thirty (30) days after delivery of a statement for such expense.

Contractor represents that this Agreement has been thoroughly reviewed by Contractor's insurance agent(s)/broker(s), who have been instructed by Contractor to procure the insurance coverage required by this Agreement. Allocated Loss Expense must be in addition to all policy limits for coverages referenced above.

If any portion of the operation is to be subcontracted by Contractor, Contractor must require that its subcontractors provide and maintain the insurance coverages set forth herein, naming JPA as an additional insured, and requiring that the subcontractors release, defend and indemnify JPA to the same extent and under the same terms and conditions as Contractor is required to release, defend and indemnify JPA herein.

Failure to provide evidence as required by Section 2. will entitle, but not require, JPA to immediately suspend work under this Agreement until such evidence is provided. Acceptance of a certificate that does not comply with this section will not operate as a waiver of Contractor's obligations hereunder. The fact that insurance (including, without limitation, self-insurance) is obtained by Contractor will not be deemed to release or diminish the liability of Contractor including, without limitation, liability under the indemnity provisions of this Agreement. Damages recoverable by JPA will not be limited by the amount of the required insurance coverage.

3. INSURANCE REQUIREMENTS

A. **Scope of Required Coverage.** The Contractor shall take out and maintain during the life of the Contract such insurance in the forms and minimum amounts as specified in this Section and as will protect Contractor and JPA from the following claims arising out of or resulting from or in connection with the Contractor's operations, undertakings or omissions directly or indirectly related to the Contract, whether by the Contractor or any Subcontractor or anyone directly or indirectly employed by any of them, or by anyone for whose acts any of them may be liable:

(1) Claims under workers' compensation, disability benefit, or other employee benefit acts;

(2) Claims arising out of bodily injury, occupational sickness or disease, or death of an employee or any other person;

(3) Claims customarily covered under personal injury liability coverage;

(4) Claims other than to the work itself arising out of an injury to or destruction of tangible property, including the loss of use resulting therefrom;

(5) Claims arising out of ownership, maintenance or use of any motor vehicle;

(6) Railroad protective liability coverage in the event the contract involves work to be performed within 50 feet of any railroad property and affecting any railroad bridge or trestle, tracks, road beds, tunnel, underpass or crossing.

B. **Worker's Compensation Insurance and Employer's Liability Insurance.** The Contractor shall provide applicable statutory Worker's Compensation Insurance with minimum limits as provided below covering all Contractor's employees, and in the case of any subcontracted work, the Contractor shall require the subcontractor similarly to provide Worker's Compensation Insurance for Subcontractor's employees. This policy shall contain the following endorsement or language: "Waiver of subrogation in favor of JPA."

The Contractor shall provide Employer's Liability Insurance with minimum limits as provided below placed with an insurance company authorized to write such insurance in all states where the Contractor will have employees located in the performance of this contract, and the Contractor shall require each Subcontractor similarly to maintain Employer's Liability Insurance on the Subcontractor's employees.

Coverage	**Listing**	**Min Amt**	**Notes**
Worker's Comp.			
	State	Statutory	
	Applicable Federal	Statutory	
Employer's Liability			
	Bodily Injury by accident	$500,000	each accident
	Bodily Injury by disease	$500,000	each employee
	Bodily Injury	$500,000	policy limit

C. **Commercial General Liability Insurance.**

(1) The Contractor shall provide Commercial General Liability Insurance in a policy form providing broad form contractual liability no less comprehensive and no more restrictive coverage than provided under the ISO® form CG00010798 or newer with standard exclusions "a" through "o" and with minimum limits as provided below.

Coverage	Min Amt	Notes
General	$5,000,000/$10,000,000	Each Occurrence/Aggregate
Products and Completed Operations	$5,000,000/$10,000,000	Each Occurrence/Aggregate
Personal and Advertising Injury	$5,000,000/$10,000,000	Each Occurrence/Aggregate
Fire Damage Limit	$ 100,000	any one fire
Medical Damage Limit	$ 10,000	any one person

(2) The required Commercial General Liability Insurance shall also include coverage for the following:

- Bodily injury and property damage.
- Fire legal liability
- Coverage for all premises and operations.
- Personal and advertising injury.
- Operations by independent contractors.
- X.C.U. Coverage including coverage for demolition of any building or structure, collapse, explosion, blasting, excavation and damage to property below the surface of ground.
- Any fellow employee exclusions shall be deleted.
- Coverage shall not contain an absolute pollution exclusion, and applicable remaining coverage shall apply for pollution exposures arising from products and completed operations.
- Coverage for products and completed operations maintained for duration of work and shall be maintained for a minimum of three years after final acceptance under the Contract or the warranty period for the same whichever is longer, unless modified in any Special Provisions.
- Liability coverage which shall include contractually assumed defense costs in addition to any policy limits.
- Contractual liability coverage.

(3) This policy shall also include the following endorsements which shall be indicated on the Certificate of Insurance.

- The definition of insured contract shall be amended to remove any exclusion or other limitation for work being done within 50 feet of railroad property.
- Endorsement to provide the general aggregate per project endorsement.
- Endorsement to provide waiver of subrogation in favor of and acceptable to JPA.
- Endorsement to provide that the policy shall be primary and non-contributory with respect to any insurance carried by the JPA.
- Separation of insureds.
- Additional insured endorsement in favor of and acceptable to the JPA.

(4) If work is to be performed within 50 feet of any railroad property and affecting any railroad bridge or trestle, tracks, road beds, tunnel, underpass or crossing, Railroad Contractual Liability Endorsement (ISO® form CG24170196 or newer). The definition of insured contract shall be amended to remove any exclusion or other limitation for any work done within fifty (50) feet of railroad property.

D. **Vehicle liability insurance coverage.**

The Contractor shall provide reasonable insurance coverage for all owned, non-owned, hired and leased vehicles. This insurance shall contain a combined single limit of at least $1,000,000 per occurrence, and include coverage for, but not limited to the following:

- Bodily injury and property damage
- Any and all vehicles owned, used or hired

This policy shall also contain the following endorsements or language, which shall be indicated on the certificate of insurance:

- Waiver of subrogation in favor of and acceptable to JPA.
- Additional insured endorsement in favor or and acceptable to JPA.
- Separation of insureds.
- The policy shall be primary and non-contributing with respect to any insurance carried by JPA.
- Endorsements to include contractual liability coverage and delete any fellow employee exclusion.
- If specifically required in the Special Provisions, the required coverage shall also include an endorsement for auto cargo pollution (ISO® form CA 99 48).

E. **Umbrella/Excess Insurance.** At the Contractor's option, the Commercial General Liability Insurance coverage limits specified in Section 3.C. above may be satisfied with a combination of primary and Umbrella/Excess Insurance.

F. **Railroad Protective Liability.** If work is to be performed within 50 feet of any railroad property and affecting any railroad bridge or trestle, tracks, road beds, tunnel, underpass or crossing or otherwise required by the Special Provisions or applicable requirements of an affected railroad, the Contractor shall provide Railroad Protective Liability Insurance naming the affected railroad/s as insured with minimum limits for bodily injury and property damage of $5,000,000 per occurrence, $10,000,000 aggregate, or such other limits as required in the Special Provisions or by the affected railroad. The original of the policy shall be furnished to the railroad and a certified copy of the same furnished to the City Attorney's office prior to any related construction or entry upon railroad premises by the Contractor or for work related to the Contract.

The policy shall be issued on a standard ISO form CG 00 35 10 93 and include the following endorsements:

- Endorsed to include the Pollution Exclusion Amendment (ISO form CG 28 31 10 93)
- Endorsed to include the Limited Seepage and Pollution Endorsement.

No other endorsements restricting coverage may be added. The original policy must be provided to Railroad prior to performing any work or services under this C&M Agreement.

In lieu of providing a Railroad Protective Liability Policy, Contractor may participate in ANY RAILROAD'S Blanket Railroad Protective Liability Insurance Policy available to JPA and JPA Contractors.

G. **Special Provision.** At the JPA's option, the minimum insurance requirements specified above may be increased or decreased by special provision in a JPA contract.

4. CONTRACTOR'S INSURANCE FOR OTHER LOSSES.

A. Contractor shall assume full responsibility for all loss or damage from any cause whatsoever to any tools owned, rented or used in connection with the Contract including any tools, machinery, equipment, storage devices, containers, sheds, temporary structures, staging structures, scaffolding, fences, forms, braces, jigs, screens, brackets, vehicles and the like owned or rented by Contractor, or Contractor's agents, subcontractors, suppliers, or employees.

B. In connection with the above, Contractor shall cause or require any applicable insurance related to physical damage of the same to provide a waiver of a right of subrogation against JPA.

5. NOTIFICATION IN EVENT OF LIABILITY OR DAMAGE.

A. The Contractor shall promptly notify JPA in writing and provide a copy of all claims and information presented to any of Contractor's insurance carrier/s upon any loss or claim or upon any occurrence giving rise to any liability or potential liability related to the Contract or related work. The notice to JPA shall include pertinent details of the claim or liability and an estimate of damages, names of witnesses, and other pertinent information including the amount of the claim, if any.

B. In the event JPA receives a claim or otherwise has actual knowledge of any loss or claim arising out of the Contract or related work and not otherwise known to or made against the Contractor, JPA shall promptly notify the Contractor of the same in writing, including pertinent details of the claim or liability; Provided, however JPA shall have no duty to inspect the project to obtain such knowledge, and provided further that JPA's obligations, if any, shall not relieve the Contractor of any liability or obligation hereunder.

6. PROPERTY INSURANCE/ BUILDER'S RISK.

A. The Contractor shall provide property insurance (a/k/a Builder's Risk or installation Floater) on all Projects involving construction or installation of buildings or structures and other projects where provided in the Special Provisions. Such insurance shall be provided in the minimum amount of the total contract sum and in addition applicable modifications thereto for the entire work on a replacement cost basis. Such insurance shall be maintained until JPA completes final acceptance of the work as provided in the Contract. Such insurance shall be written and endorsed, where applicable, to include the interests of JPA, Contractor, Subcontractors, Sub-subcontractors in the related work. The maximum deductible for such insurance shall be $5,000 for each occurrence, which deductible shall be the responsibility of the Contractor. Such insurance shall contain a "permission to occupy" endorsement.

B. All related Property Insurance shall be provided on a "Special Perils" or similar policy form and shall at a minimum insure against perils of fire including extended coverage and physical loss or damage including without limitation or duplication of coverage: flood, earthquake, theft, vandalism, malicious mischief, collapse, and debris removal, including demolition whether occasioned by the loss or by enforcement of applicable legal or safety requirements including compensation or costs for JPA's related costs and expenses (as owner) including labor required as a result of such loss.

C. All related Property Insurance shall include coverage for falsework, temporary buildings, work stored off-site or in-transit to the site, whether in whole or in part. Coverage for work off-site or in-transit shall be a minimum of 10% of the amount of the policy.

D. The Contractor's Property Insurance shall be primary coverage for any insured loss related to or arising out of the Contract and shall not be reduced by or coordinated with separate property insurance maintained by JPA.

smart # 10070200
7-26-10/law/tb

CITY OF LINCOLN
MAYOR CHRIS BEUTLER

CITY OF LINCOLN
EXECUTIVE ORDER

NO. 083319

WHEREAS, there is concern over the inappropriate competitive advantages in the public bidding process for local publicly funded construction and delivery service contracts resulting from the misclassification of individuals performing construction labor services as "independent contractors" rather than "employees"; such "independent contractors" are commonly referred to as "1099 workers" due to the IRS form they receive rather than a W-4 which an employee receives;

WHEREAS, this misclassification of such individuals as "independent contractors" rather than as "employees" eliminates any obligation to pay these individuals legally required minimum or overtime wages, to provide legally required workers' compensation insurance, to make unemployment insurance payments, to pay legally required employment and payroll taxes, and to provide any other health, pension, or benefit such individuals would typically receive if properly classified as employees;

WHEREAS, this misclassification of individuals performing construction labor services for the contractor as "independent contractors" rather than "employees" is a violation of federal and state law, but is difficult to enforce once public construction or delivery service contracts have been bid, awarded, and entered into;

WHEREAS, the use of public funds to compensate contractors who unlawfully avoid their obligation to pay legally required minimum or overtime wages, to provide legally required workers' compensation insurance, to make unemployment insurance payments, to pay legally required employment and payroll taxes, and to provide any other health, pension, or benefit is not in the public interest; and

WHEREAS, the Employee Classification Act, Neb. Rev. Stat. §§ 48-2901 to 48-2912 (effective July 15, 2010) provides that any contract entered into between a political subdivision and a contractor shall require that each contractor who performs construction or delivery service pursuant to the contract submit to the political subdivision an affidavit attesting that (1) each individual performing services for such contractor is properly classified under the Employee Classification Act, (2) such contractor has completed a federal I-9 immigration form and has such form on file for each employee performing services, (3) such contractor has complied with Neb. Rev. Stat. § 4-114 requirements that the contractor register and use a federal immigration employment verification system to determine the work eligibility status of new employees physically performing services in the State of Nebraska, (4) such contractor has no reasonable basis to believe that any individual performing services for such contractor is an undocumented worker, and (5) as of the time of the contract, such contractor is not barred from contracting with the state or any political subdivision pursuant to § 48-2912 of the Employee Classification Act.

NOW, THEREFORE, BY VIRTUE OF THE AUTHORITY VESTED IN ME by the Charter of the City of Lincoln, I hereby establish the following policy as to the bid and award of contracts to contractors for construction and delivery services with the City of Lincoln:

The Purchasing Agent shall immediately include in the City of Lincoln's notice to bidders for construction contracts that all contractors submitting bids in response to the notice shall affirmatively certify to the Purchasing Agent that all individuals hired to perform construction or delivery labor services for the contractor under the contract shall be properly classified as employees and not as independent contractors if the individual does not meet the requirements of an independent contractor under federal and state law (including the requirements of the State of Nebraska Employee Classification Act), and that the contractor will comply with all legal obligations with respect to these employees (including, but not limited to, minimum and overtime pay, workers' compensation, unemployment compensation, and payment of federal and state payroll taxes). The

notice to bidders shall further provide that contractors may use affidavits required pursuant to the Employee Classification Act for this purpose, but that a failure to make the affirmative certification to the Purchasing Agent shall render the bidder ineligible for award of the contract.

The Purchasing Agent shall immediately include the following provisions in contracts for construction or delivery services:

(1) Contractor agrees that each individual performing services for the contractor shall be properly classified as an employee and not as an independent contractor if the individual does not meet the requirements of an independent contractor under the State of Nebraska's Employee Classification Act and that contractor shall comply with all legal obligations with respect to the employee (including, but not limited to, minimum and overtime pay, workers' compensation, unemployment compensation, and payment of federal and state payroll taxes).

(2) Contractor understands and agrees that failure to classify each individual hired to perform services under the contract as an employee rather than as an independent contractor if the individual does not meet the requirements of an independent contractor under the State of Nebraska's Employee Classification Act and/or failure to comply with legal obligations with respect to the employee (including, but not limited to, minimum and overtime pay, workers' compensation, unemployment compensation, and payment of federal and state payroll taxes) shall be considered a breach of the contract and is a grounds for rescission of the contract by the City.

(3) Contractor additionally agrees to include the following provisions in each subcontract entered into with a subcontractor as part of the contractor's contract with the City:

(a) Subcontractor agrees that each individual performing services for the subcontractor shall be properly classified as an employee and not as an independent contractor if the individual does not meet the requirements of an independent contractor under the State of Nebraska's Employee Classification Act and that subcontractor shall comply with all legal obligations with respect to the employee (including, but not limited to, minimum and overtime pay,

workers' compensation, unemployment compensation, and payment of federal and state payroll taxes).

(b) Subcontractor understands and agrees that subcontractor's failure to properly classify individuals hired to perform services under the subcontract as employees and not as independent contractors if the individual does not meet the requirements of an independent contractor under the State of Nebraska's Employee Classification Act and/or failure to comply with legal obligations with respect to the employee (including, but not limited to, minimum and overtime pay, workers' compensation, unemployment compensation, and payment of federal and state payroll taxes) shall be considered a breach of the contract and is a grounds for rescission of the subcontract by the contractor.

(4) Contractor agrees that if subcontractor fails to or is suspected of failing to properly classify each individual hired pursuant to the subcontract as an employee and not as an independent contractor if the individual does not meet the requirements of an independent contractor under the State of Nebraska's Employee Classification Act and/or fails to comply with legal obligations with respect to the subcontractor's employee, the contractor shall take appropriate corrective action including, but not limited to, reporting the suspected violation of the State of Nebraska Employee Classification Act to the Nebraska Department of Labor or rescission of the subcontract by the contractor. Written notification of the corrective action shall be submitted to the City of Lincoln Purchasing Department. Contractor understands and agrees that contractor's failure to take appropriate corrective action shall be considered a breach of the contractor's contract with the City of Lincoln and is a grounds for rescission of the contract by the City.

(5) The City of Lincoln shall notify the Nebraska Department of Labor of any contractor or subcontractor it has determined is in breach of contract due to the terms of this order.

(6) Any contractor or subcontractor who shall have been determined by the Nebraska Department of Labor to have knowingly provided a false affidavit to the City of Lincoln

under the State of Nebraska's Employee Classification Act shall be referred to the Purchasing Agent of the City who shall determine whether to declare such contractor or subcontractor an irresponsible bidder who shall be disqualified from receiving any business from the municipality for a stated period of time, in accordance with Lincoln Municipal Code § 2.18.030(n)(1) or (2).

(7) This policy does not prohibit a contractor or subcontractor from hiring individuals to perform construction labor services as independent contractors, provided that the contractor's or subcontractor's use of such individuals as an independent contractor complies with the criteria found in subdivision 5 of Neb. Rev. Stat. § 48-604 and is otherwise valid under federal and state law and is not intended to circumvent lawful obligations under federal and state law or city contractual requirements.

The City Clerk is directed to send a copy of this Executive Order to Vince Mejer, City Purchasing Agent, for his record.

Dated this 28 day of July, 2010.

Chris Beutler, Mayor of Lincoln

Approved as to Form & Legality:

City Attorney

EMPLOYEE CLASSIFICATION ACT AFFIDAVIT

For the purposes of complying with THE NEBRASKA EMPLOYEE CLASSIFICATION ACT, I, _____, herein below known as the Contractor, state under oath and swear as follows:

1. Each individual performing services for the Contractor is properly classified under the Employee Classification Act.

2.The Contractor has completed a federal I-9 immigration form and has such form on file for each employee performing services.

3. The Contractor has complied with Neb Rev Stat 4-114.

4. The Contractor has no reasonable basis to believe that any individual performing services for the Contractor is an undocumented worker.

5. The Contractor is not barred from contracting with the state or any political subdivision pursuant to section 12 of this Act.

6. As the Contractor I understand that pursuant to the Employee Classification Act a violation of the Act by a contractor is grounds for rescission of the contract by the City. I understand that pursuant to the Act any contractor who knowingly provides a false affidavit may be subject to criminal penalties and upon a second or subsequent violation shall be barred from contracting with the City for a period of three years after the date of discovery of the falsehood.

I hereby affirm and swear that the statements and information provided on this affidavit are true, complete and accurate. The undersigned person does hereby agree and represent that he or she is legally capable to sign this affidavit and to lawfully bind the Contractor to this affidavit.

PRINT NAME: _____
(First, Middle, Last)

SIGNATURE: _____

TITLE: _____

State of Nebraska)
) ss.
County of _____)

This affidavit was signed and sworn to before me, the undersigned Notary Public, on this ____ day of _____, 20__.

_____
Notary Public

EXHIBIT D TO CONTRACT AGREEMENT

29 C.F.R. § 5.5

Code of Federal Regulations Currentness
Title 29. Labor
Subtitle A. Office of the Secretary of Labor
Part 5. Labor Standards Provisions Applicable to Contracts Covering Federally Financed and Assisted Construction (Also Labor Standards Provisions Applicable to Nonconstruction Contracts Subject to the Contract Work Hours and Safety Standards Act)
Subpart A. Davis-Bacon and Related Acts Provisions and Procedures
§ 5.5 Contract provisions and related matters.

(a) The Agency head shall cause or require the contracting officer to insert in full in any contract in excess of $2,000 which is entered into for the actual construction, alteration and/or repair, including painting and decorating, of a public building or public work, or building or work financed in whole or in part from Federal funds or in accordance with guarantees of a Federal agency or financed from funds obtained by pledge of any contract of a Federal agency to make a loan, grant or annual contribution (except where a different meaning is expressly indicated), and which is subject to the labor standards provisions of any of the acts listed in § 5.1, the following clauses (or any modifications thereof to meet the particular needs of the agency, *Provided*, That such modifications are first approved by the Department of Labor):

(1) Minimum wages.

(i) All laborers and mechanics employed or working upon the site of the work (or under the United States Housing Act of 1937 or under the Housing Act of 1949 in the construction or development of the project), will be paid unconditionally and not less often than once a week, and without subsequent deduction or rebate on any account (except such payroll deductions as are permitted by regulations issued by the Secretary of Labor under the Copeland Act (29 CFR part 3)), the full amount of wages and bona fide fringe benefits (or cash equivalents thereof) due at time of payment computed at rates not less than those contained in the wage determination of the Secretary of Labor which is attached hereto and made a part hereof, regardless of any contractual relationship which may be alleged to exist between the contractor and such laborers and mechanics.

Contributions made or costs reasonably anticipated for bona fide fringe benefits under section 1 (b)(2) of the Davis-Bacon Act on behalf of laborers or mechanics are considered wages paid to such laborers or mechanics, subject to the provisions of paragraph (a)(1)(iv) of this section; also, regular contributions made or costs incurred for more than a weekly period (but not less often than quarterly) under plans, funds, or programs which cover the particular weekly period, are deemed to be constructively made or incurred during such weekly period. Such laborers and mechanics shall be paid the appropriate wage rate and fringe benefits on the wage determination for the classification of work actually performed, without regard to skill, except as provided in § 5.5(a)(4). Laborers or mechanics performing work in more than one classification may be compensated at the rate specified for each classification for the time actually worked therein: *Provided*, That the employer's payroll records accurately set forth the time spent in each classification in which work is performed. The wage determination (including any additional classification and wage rates conformed under paragraph (a)(1)(ii) of this section) and the Davis-Bacon poster (WH-1321) shall be posted at all times by the contractor and its subcontractors at the site of the work in a prominent and accessible place where it can be easily seen by the workers.

(ii)(A) The contracting officer shall require that any class of laborers or mechanics, including helpers, which is not listed in the wage determination and which is to be employed under the contract shall be classified in conformance with the wage determination. The contracting officer shall approve an additional classification and wage rate and fringe benefits therefore only when

the following criteria have been met:

(1) The work to be performed by the classification requested is not performed by a classification in the wage determination; and

(2) The classification is utilized in the area by the construction industry; and

(3) The proposed wage rate, including any bona fide fringe benefits, bears a reasonable relationship to the wage rates contained in the wage determination.

(B) If the contractor and the laborers and mechanics to be employed in the classification (if known), or their representatives, and the contracting officer agree on the classification and wage rate (including the amount designated for fringe benefits where appropriate), a report of the action taken shall be sent by the contracting officer to the Administrator of the Wage and Hour Division, Employment Standards Administration, U.S. Department of Labor, Washington, DC 20210. The Administrator, or an authorized representative, will approve, modify, or disapprove every additional classification action within 30 days of receipt and so advise the contracting officer or will notify the contracting officer within the 30-day period that additional time is necessary.

(C) In the event the contractor, the laborers or mechanics to be employed in the classification or their representatives, and the contracting officer do not agree on the proposed classification and wage rate (including the amount designated for fringe benefits, where appropriate), the contracting officer shall refer the questions, including the views of all interested parties and the recommendation of the contracting officer, to the Administrator for determination. The Administrator, or an authorized representative, will issue a determination within 30 days of receipt and so advise the contracting officer or will notify the contracting officer within the 30-day period that additional time is necessary.

(D) The wage rate (including fringe benefits where appropriate) determined pursuant to paragraphs (a)(1)(ii)(B) or (C) of this section, shall be paid to all workers performing work in the classification under this contract from the first day on which work is performed in the classification.

(iii) Whenever the minimum wage rate prescribed in the contract for a class of laborers or mechanics includes a fringe benefit which is not expressed as an hourly rate, the contractor shall either pay the benefit as stated in the wage determination or shall pay another bona fide fringe benefit or an hourly cash equivalent thereof.

(iv) If the contractor does not make payments to a trustee or other third person, the contractor may consider as part of the wages of any laborer or mechanic the amount of any costs reasonably anticipated in providing bona fide fringe benefits under a plan or program, *Provided*, That the Secretary of Labor has found, upon the written request of the contractor, that the applicable standards of the Davis-Bacon Act have been met. The Secretary of Labor may require the contractor to set aside in a separate account assets for the meeting of obligations under the plan or program.

(2) Withholding. The (write in name of Federal Agency or the loan or grant recipient) shall upon its own action or upon written request of an authorized representative of the Department of Labor withhold or cause to be withheld from the contractor under this contract or any other Federal contract with the same prime contractor, or any other federally-assisted contract subject to Davis-Bacon prevailing wage requirements, which is held by the same prime contractor, so much of the accrued payments or advances as may be considered necessary to pay laborers and mechanics, including apprentices, trainees, and helpers, employed by the contractor or any subcontractor the full amount of wages required by the contract. In the event of failure to pay any laborer or mechanic, including any apprentice, trainee, or helper, employed or working on the site of the work (or under the United States Housing Act of 1937 or under the Housing Act of 1949 in the construction or development of the project), all or part of the wages required by the contract,

the (Agency) may, after written notice to the contractor, sponsor, applicant, or owner, take such action as may be necessary to cause the suspension of any further payment, advance, or guarantee of funds until such violations have ceased.

(3) Payrolls and basic records.

(i) Payrolls and basic records relating thereto shall be maintained by the contractor during the course of the work and preserved for a period of three years thereafter for all laborers and mechanics working at the site of the work (or under the United States Housing Act of 1937, or under the Housing Act of 1949, in the construction or development of the project). Such records shall contain the name, address, and social security number of each such worker, his or her correct classification, hourly rates of wages paid (including rates of contributions or costs anticipated for bona fide fringe benefits or cash equivalents thereof of the types described in section 1(b)(2)(B) of the Davis-Bacon Act), daily and weekly number of hours worked, deductions made and actual wages paid. Whenever the Secretary of Labor has found under 29 CFR 5.5(a)(1)(iv) that the wages of any laborer or mechanic include the amount of any costs reasonably anticipated in providing benefits under a plan or program described in section 1(b)(2)(B) of the Davis-Bacon Act, the contractor shall maintain records which show that the commitment to provide such benefits is enforceable, that the plan or program is financially responsible, and that the plan or program has been communicated in writing to the laborers or mechanics affected, and records which show the costs anticipated or the actual cost incurred in providing such benefits. Contractors employing apprentices or trainees under approved programs shall maintain written evidence of the registration of apprenticeship programs and certification of trainee programs, the registration of the apprentices and trainees, and the ratios and wage rates prescribed in the applicable programs.

(ii)(A) The contractor shall submit weekly for each week in which any contract work is performed a copy of all payrolls to the (write in name of appropriate federal agency) if the agency is a party to the contract, but if the agency is not such a party, the contractor will submit the payrolls to the applicant, sponsor, or owner, as the case may be, for transmission to the (write in name of agency). The payrolls submitted shall set out accurately and completely all of the information required to be maintained under 29 CFR 5.5(a)(3)(i), except that full social security numbers and home addresses shall not be included on weekly transmittals. Instead the payrolls shall only need to include an individually identifying number for each employee (e.g., the last four digits of the employee's social security number). The required weekly payroll information may be submitted in any form desired. Optional Form WH-347 is available for this purpose from the Wage and Hour Division Web site at http://www.dol.gov/esa/whd/forms/wh347instr.htm or its successor site. The prime contractor is responsible for the submission of copies of payrolls by all subcontractors. Contractors and subcontractors shall maintain the full social security number and current address of each covered worker, and shall provide them upon request to the (write in name of appropriate federal agency) if the agency is a party to the contract, but if the agency is not such a party, the contractor will submit them to the applicant, sponsor, or owner, as the case may be, for transmission to the (write in name of agency), the contractor, or the Wage and Hour Division of the Department of Labor for purposes of an investigation or audit of compliance with prevailing wage requirements. It is not a violation of this section for a prime contractor to require a subcontractor to provide addresses and social security numbers to the prime contractor for its own records, without weekly submission to the sponsoring government agency (or the applicant, sponsor, or owner).

(B) Each payroll submitted shall be accompanied by a "Statement of Compliance," signed by the contractor or subcontractor or his or her agent who pays or supervises the payment of the persons employed under the contract and shall certify the following:

(1) That the payroll for the payroll period contains the information required to be provided under § 5.5 (a)(3)(ii) of Regulations, 29 CFR part 5, the appropriate information is being maintained under § 5.5 (a)(3)(i) of Regulations, 29 CFR part 5, and that such information is correct and complete;

(2) That each laborer or mechanic (including each helper, apprentice, and trainee) employed on the contract during the payroll period has been paid the full weekly wages earned, without rebate, either directly or indirectly, and that no deductions have been made either directly or indirectly from the full wages earned, other than permissible deductions as set forth in Regulations, 29 CFR part 3;

(3) That each laborer or mechanic has been paid not less than the applicable wage rates and fringe benefits or cash equivalents for the classification of work performed, as specified in the applicable wage determination incorporated into the contract.

(C) The weekly submission of a properly executed certification set forth on the reverse side of Optional Form WH-347 shall satisfy the requirement for submission of the "Statement of Compliance" required by paragraph (a)(3)(ii)(B) of this section.

(D) The falsification of any of the above certifications may subject the contractor or subcontractor to civil or criminal prosecution under section 1001 of title 18 and section 231 of title 31 of the United States Code.

(iii) The contractor or subcontractor shall make the records required under paragraph (a)(3)(i) of this section available for inspection, copying, or transcription by authorized representatives of the (write the name of the agency) or the Department of Labor, and shall permit such representatives to interview employees during working hours on the job. If the contractor or subcontractor fails to submit the required records or to make them available, the Federal agency may, after written notice to the contractor, sponsor, applicant, or owner, take such action as may be necessary to cause the suspension of any further payment, advance, or guarantee of funds. Furthermore, failure to submit the required records upon request or to make such records available may be grounds for debarment action pursuant to 29 CFR 5.12.

(4) Apprentices and trainees--

(i) Apprentices. Apprentices will be permitted to work at less than the predetermined rate for the work they performed when they are employed pursuant to and individually registered in a bona fide apprenticeship program registered with the U.S. Department of Labor, Employment and Training Administration, Office of Apprenticeship Training, Employer and Labor Services, or with a State Apprenticeship Agency recognized by the Office, or if a person is employed in his or her first 90 days of probationary employment as an apprentice in such an apprenticeship program, who is not individually registered in the program, but who has been certified by the Office of Apprenticeship Training, Employer and Labor Services or a State Apprenticeship Agency (where appropriate) to be eligible for probationary employment as an apprentice. The allowable ratio of apprentices to journeymen on the job site in any craft classification shall not be greater than the ratio permitted to the contractor as to the entire work force under the registered program. Any worker listed on a payroll at an apprentice wage rate, who is not registered or otherwise employed as stated above, shall be paid not less than the applicable wage rate on the wage determination for the classification of work actually performed. In addition, any apprentice performing work on the job site in excess of the ratio permitted under the registered program shall be paid not less than the applicable wage rate on the wage determination for the work actually performed. Where a contractor is performing construction on a project in a locality other than that in which its program is registered, the ratios and wage rates (expressed in percentages of the journeyman's hourly rate) specified in the contractor's or subcontractor's registered program shall be observed. Every apprentice must be paid at not less than the rate specified in the registered program for the apprentice's level of progress, expressed as a percentage of the journeymen hourly rate specified in the applicable wage determination. Apprentices shall be paid fringe benefits in accordance with the provisions of the apprenticeship program. If the apprenticeship program does not specify fringe benefits, apprentices must be paid the full amount of fringe benefits listed on the wage determination for the applicable classification. If the Administrator determines that a different practice prevails for the applicable apprentice classification, fringes shall be paid in accordance with that determination. In the event the Office of Apprenticeship Training, Employer and Labor Services, or a State Apprenticeship Agency

recognized by the Office, withdraws approval of an apprenticeship program, the contractor will no longer be permitted to utilize apprentices at less than the applicable predetermined rate for the work performed until an acceptable program is approved.

(ii) Trainees. Except as provided in 29 CFR 5.16, trainees will not be permitted to work at less than the predetermined rate for the work performed unless they are employed pursuant to and individually registered in a program which has received prior approval, evidenced by formal certification by the U.S. Department of Labor, Employment and Training Administration. The ratio of trainees to journeymen on the job site shall not be greater than permitted under the plan approved by the Employment and Training Administration. Every trainee must be paid at not less than the rate specified in the approved program for the trainee's level of progress, expressed as a percentage of the journeyman hourly rate specified in the applicable wage determination. Trainees shall be paid fringe benefits in accordance with the provisions of the trainee program. If the trainee program does not mention fringe benefits, trainees shall be paid the full amount of fringe benefits listed on the wage determination unless the Administrator of the Wage and Hour Division determines that there is an apprenticeship program associated with the corresponding journeyman wage rate on the wage determination which provides for less than full fringe benefits for apprentices. Any employee listed on the payroll at a trainee rate who is not registered and participating in a training plan approved by the Employment and Training Administration shall be paid not less than the applicable wage rate on the wage determination for the classification of work actually performed. In addition, any trainee performing work on the job site in excess of the ratio permitted under the registered program shall be paid not less than the applicable wage rate on the wage determination for the work actually performed. In the event the Employment and Training Administration withdraws approval of a training program, the contractor will no longer be permitted to utilize trainees at less than the applicable predetermined rate for the work performed until an acceptable program is approved.

(iii) Equal employment opportunity. The utilization of apprentices, trainees and journeymen under this part shall be in conformity with the equal employment opportunity requirements of Executive Order 11246, as amended, and 29 CFR part 30.

(5) Compliance with Copeland Act requirements. The contractor shall comply with the requirements of 29 CFR part 3, which are incorporated by reference in this contract.

(6) Subcontracts. The contractor or subcontractor shall insert in any subcontracts the clauses contained in 29 CFR 5.5(a)(1) through (10) and such other clauses as the (write in the name of the Federal agency) may by appropriate instructions require, and also a clause requiring the subcontractors to include these clauses in any lower tier subcontracts. The prime contractor shall be responsible for the compliance by any subcontractor or lower tier subcontractor with all the contract clauses in 29 CFR 5.5.

(7) Contract termination: debarment. A breach of the contract clauses in 29 CFR 5.5 may be grounds for termination of the contract, and for debarment as a contractor and a subcontractor as provided in 29 CFR 5.12.

(8) Compliance with Davis-Bacon and Related Act requirements. All rulings and interpretations of the Davis-Bacon and Related Acts contained in 29 CFR parts 1, 3, and 5 are herein incorporated by reference in this contract.

(9) Disputes concerning labor standards. Disputes arising out of the labor standards provisions of this contract shall not be subject to the general disputes clause of this contract. Such disputes shall be resolved in accordance with the procedures of the Department of Labor set forth in 29 CFR parts 5, 6, and 7. Disputes within the meaning of this clause include disputes between the contractor (or any of its subcontractors) and the contracting agency, the U.S. Department of Labor, or the employees or their representatives.

(10) Certification of eligibility.

(i) By entering into this contract, the contractor certifies that neither it (nor he or she) nor any person or firm who has an interest in the contractor's firm is a person or firm ineligible to be awarded Government contracts by virtue of section 3(a) of the Davis-Bacon Act or 29 CFR 5.12 (a)(1).

(ii) No part of this contract shall be subcontracted to any person or firm ineligible for award of a Government contract by virtue of section 3(a) of the Davis-Bacon Act or 29 CFR 5.12(a)(1).

(iii) The penalty for making false statements is prescribed in the U.S. Criminal Code, 18 U.S.C. 1001.

(b) Contract Work Hours and Safety Standards Act. The Agency Head shall cause or require the contracting officer to insert the following clauses set forth in paragraphs (b)(1), (2), (3), and (4) of this section in full in any contract in an amount in excess of $100,000 and subject to the overtime provisions of the Contract Work Hours and Safety Standards Act. These clauses shall be inserted in addition to the clauses required by § 5.5(a) or 4.6 of part 4 of this title. As used in this paragraph, the terms laborers and mechanics include watchmen and guards.

(1) Overtime requirements. No contractor or subcontractor contracting for any part of the contract work which may require or involve the employment of laborers or mechanics shall require or permit any such laborer or mechanic in any workweek in which he or she is employed on such work to work in excess of forty hours in such workweek unless such laborer or mechanic receives compensation at a rate not less than one and one-half times the basic rate of pay for all hours worked in excess of forty hours in such workweek.

(2) Violation; liability for unpaid wages; liquidated damages. In the event of any violation of the clause set forth in paragraph (b)(1) of this section the contractor and any subcontractor responsible therefor shall be liable for the unpaid wages. In addition, such contractor and subcontractor shall be liable to the United States (in the case of work done under contract for the District of Columbia or a territory, to such District or to such territory), for liquidated damages. Such liquidated damages shall be computed with respect to each individual laborer or mechanic, including watchmen and guards, employed in violation of the clause set forth in paragraph (b)(1) of this section, in the sum of $10 for each calendar day on which such individual was required or permitted to work in excess of the standard workweek of forty hours without payment of the overtime wages required by the clause set forth in paragraph (b)(1) of this section.

(3) Withholding for unpaid wages and liquidated damages. The (write in the name of the Federal agency or the loan or grant recipient) shall upon its own action or upon written request of an authorized representative of the Department of Labor withhold or cause to be withheld, from any moneys payable on account of work performed by the contractor or subcontractor under any such contract or any other Federal contract with the same prime contractor, or any other federally-assisted contract subject to the Contract Work Hours and Safety Standards Act, which is held by the same prime contractor, such sums as may be determined to be necessary to satisfy any liabilities of such contractor or subcontractor for unpaid wages and liquidated damages as provided in the clause set forth in paragraph (b)(2) of this section.

(4) Subcontracts. The contractor or subcontractor shall insert in any subcontracts the clauses set forth in paragraph (b)(1) through (4) of this section and also a clause requiring the subcontractors to include these clauses in any lower tier subcontracts. The prime contractor shall be responsible for compliance by any subcontractor or lower tier subcontractor with the clauses set forth in paragraphs (b)(1) through (4) of this section.

(c) In addition to the clauses contained in paragraph (b), in any contract subject only to the Contract Work Hours and Safety Standards Act and not to any of the other statutes cited in § 5.1, the Agency Head shall cause or require the contracting officer to insert a clause requiring that the contractor or subcontractor shall maintain payrolls and basic payroll records during the course of the work and shall preserve them for a period of three years from the completion of the contract for all laborers and mechanics, including guards and watchmen, working on the contract. Such records shall contain the

name and address of each such employee, social security number, correct classifications, hourly rates of wages paid, daily and weekly number of hours worked, deductions made, and actual wages paid. Further, the Agency Head shall cause or require the contracting officer to insert in any such contract a clause providing that the records to be maintained under this paragraph shall be made available by the contractor or subcontractor for inspection, copying, or transcription by authorized representatives of the (write the name of agency) and the Department of Labor, and the contractor or subcontractor will permit such representatives to interview employees during working hours on the job.

(The information collection, recordkeeping, and reporting requirements contained in the following paragraphs of this section were approved by the Office of Management and Budget:

Paragraph	OMB Control Number
(a)(1)(ii)(B)	1215-01
(a)(1)(ii)(C)	1215-01
(a)(1)(iv)	1215-01
(a)(3)(i)	1215-0140, 1215-00
(a)(3)(ii)(A)	1215-01
(c)	1215-0140, 1215-00

[29 FR 100, Jan. 4, 1964, as amended at 29 FR 13463, Sept. 30, 1964; 30 FR 13136, Oct. 15, 1965; 36 FR 19304, Oct. 2, 1971; 40 FR 30481, July 21, 1975; 41 FR 10063, March 9, 1976; 47 FR 145, Jan. 5, 1982; 51 FR 12265, April 9, 1986; 54 FR 4243, Jan. 27, 1989; 55 FR 50150, Dec. 4, 1990; 57 FR 28776, June 26, 1992; 58 FR 58955, Nov. 5, 1993; 61 FR 40716, Aug. 5, 1996; 61 FR 68641, Dec. 30, 1996; 65 FR 69693, Nov. 20, 2000; 73 FR 77511, Dec. 19, 2008; 74 FR 2862, Jan. 16, 2009]

SOURCE: 48 FR 19541, April 29, 1983; 51 FR 12265, April 9, 1986; 61 FR 40716, Aug. 5, 1996; 65 FR 80278, Dec. 20, 2000; 73 FR 77511, Dec. 19, 2008, unless otherwise noted.

AUTHORITY: 5 U.S.C. 301; R.S. 161, 64 Stat. 1267; Reorganization Plan No. 14 of 1950, 5 U.S.C. appendix; 40 U.S.C. 3141 et seq.; 40 U.S.C. 3145; 40 U.S.C. 3148; 40 U.S.C. 3701 et seq.; and the laws listed in 5.1(a) of this part; Secretary's Order 01-2008; and Employment Standards Order No. 2001-01.; 40 U.S.C. 276a-276a-7; 40 U.S.C. 276c; 40 U.S.C. 327-332; Reorganization Plan No. 14 of 1950, 5 U.S.C. Appendix; 5 U.S.C. 301; and the statutes listed in section 5.1(a) of this part.

NOTES OF DECISIONS

29 C. F. R. § 5.5, 29 CFR § 5.5

Current through December 15, 2011; 76 FR 77913.

© 2011 Thomson Reuters

END OF DOCUMENT

(c) 2011 Thomson Reuters. No Claim to Orig. US Gov. Works.

>

General Decision Number: NE120034 06/15/2012 NE34

Superseded General Decision Number: NE20100044

State: Nebraska

Construction Type: Highway

Counties: Lancaster, Saunders and Seward Counties in Nebraska.

HIGHWAY CONSTRUCTION PROJECTS

Modification Number	Publication Date
0	01/06/2012
1	03/16/2012
2	06/15/2012

* ELEC0022-018 06/04/2012

Saunders County - East of Highway 109 and North of Alternate Highway 30)

	Rates	Fringes
ELECTRICIAN	$ 31.00	13.71

ELEC0265-005 09/01/2011

REMAINDER OF SAUNDERS COUNTY

	Rates	Fringes
Electricians:		
Zone 1	$ 25.57	4.5%+8.75
Zone 2	$ 25.87	4.5%+8.75
Zone 3	$ 26.17	4.5%+8.75
Zone 4	$ 26.57	4.5%+8.75

ZONE DEFINITIONS [Mileage from main Post Office in Lincoln]
Zone 1: 0 to 35 miles
Zone 2: 36 to 50 miles
Zone 3: 51 to 75 miles
Zone 4: 76 miles and over

FOOTNOTE:
Work on scaffolds, hanging scaffolds, boatswains chairs or ladders, etc., in any area where the worker is in a position to fall 40 ft. or more, or where objects above the worker can fall 40 ft. or more: to be paid one and one-half times the straight- time rate of pay.

SUNE2011-023 08/29/2011

	Rates	Fringes
CARPENTER (Includes Form Work)	$ 18.51	

EXHIBIT D TO CONTRACT AGREEMENT

CEMENT MASON/CONCRETE FINISHER
Lancaster County.....$ 18.48 5.86
Seward, Saunders Counties...$ 18.17 5.86

ELECTRICIAN, Includes
Installation of Traffic
Signals
Lancaster, Seward Counties..$ 28.83

HIGHWAY/PARKING LOT STRIPING:
Laborer
Lancaster County.....$ 11.82
Saunders County.....$ 12.37
Seward County.....$ 11.27

IRONWORKER, REINFORCING.....$ 19.35

LABORER (COMMON OR GENERAL)
Lancaster County.....$ 12.58
Saunders County.....$ 12.55
Seward County.....$ 12.20

LABORER: Concrete Saw (Hand
Held/Walk Behind).....$ 16.07 6.55

LABORER: Mason Tender
(Cement/Concrete).....$ 10.44

LABORER: Traffic Control -
Flagger and Cone/Barrel Setter
Lancaster County.....$ 11.87
Seward County.....$ 9.00

Operating Engineers: (Skid
Loader)
Lancaster County.....$ 10.56
Saunders County.....$ 12.51
Seward County.....$ 14.85

OPERATOR: Asphalt Spreader.....$ 18.74

OPERATOR: Backhoe Loader
Combo.....$ 15.94

OPERATOR: Backhoe/Excavator
Lancaster County.....$ 19.91 6.07
Saunders County.....$ 19.47 6.07
Seward County.....$ 16.15

OPERATOR: Broom.....$ 11.43

OPERATOR: Bulldozer
Lancaster County.....$ 16.78
Seward, Saunders Counties...$ 16.34

OPERATOR: Compactor.....$ 13.36

OPERATOR: Concrete Saw
Lancaster, Seward Counties..$ 20.87

EXHIBIT D TO CONTRACT AGREEMENT

OPERATOR: Crane.....$ 22.38

OPERATOR: Hydrohammer.....$ 17.03

OPERATOR: Loader
Lancaster County.....$ 17.44
Saunders County.....$ 17.19
Seward County.....$ 16.04

OPERATOR: Mechanic.....$ 19.58

OPERATOR: Milling Machine.....$ 12.80

OPERATOR: Oiler.....$ 16.21

OPERATOR: Paver
Lancaster County.....$ 14.79
Seward, Saunders Counties...$ 16.13

OPERATOR: Roller
Lancaster County.....$ 13.00
Saunders County.....$ 13.45
Seward County.....$ 14.04

OPERATOR: Scraper
Lancaster County.....$ 14.80
Seward, Saunders Counties...$ 14.83

OPERATOR: Tractor
Lancaster County.....$ 9.50
Seward, Saunders Counties...$ 10.65

OPERATOR: Grader/Blade
Lancaster County.....$ 16.09
Seward, Saunders Counties...$ 16.04

TRUCK DRIVER, Includes Dump
and Tandem Truck
Lancaster County.....$ 14.51
Saunders County.....$ 14.47
Seward County.....$ 14.16

TRUCK DRIVER: Lowboy Truck.....$ 15.93

TRUCK DRIVER: Semi-Trailer
Truck
Lancaster County.....$ 13.48
Seward, Saunders Counties...$ 14.09

TRUCK DRIVER: Water Truck.....$ 18.00 6.40

WELDERS - Receive rate prescribed for craft performing
operation to which welding is incidental.

==========

Unlisted classifications needed for work not included within

EXHIBIT D TO CONTRACT AGREEMENT

the scope of the classifications listed may be added after award only as provided in the labor standards contract clauses (29CFR 5.5 (a) (1) (ii)).

The body of each wage determination lists the classification and wage rates that have been found to be prevailing for the cited type(s) of construction in the area covered by the wage determination. The classifications are listed in alphabetical order of "identifiers" that indicate whether the particular rate is union or non-union.

Union Identifiers

An identifier enclosed in dotted lines beginning with characters other than "SU" denotes that the union classification and rate have found to be prevailing for that classification. Example: PLUM0198-005 07/01/2011. The first four letters , PLUM, indicate the international union and the four-digit number, 0198, that follows indicates the local union number or district council number where applicable , i.e., Plumbers Local 0198. The next number, 005 in the example, is an internal number used in processing the wage determination. The date, 07/01/2011, following these characters is the effective date of the most current negotiated rate/collective bargaining agreement which would be July 1, 2011 in the above example.

Union prevailing wage rates will be updated to reflect any changes in the collective bargaining agreements governing the rate.

Non-Union Identifiers

Classifications listed under an "SU" identifier were derived from survey data by computing average rates and are not union rates; however, the data used in computing these rates may include both union and non-union data. Example: SULA2004-007 5/13/2010. SU indicates the rates are not union rates, LA indicates the State of Louisiana; 2004 is the year of the survey; and 007 is an internal number used in producing the wage determination. A 1993 or later date, 5/13/2010, indicates the classifications and rates under that identifier were issued as a General Wage Determination on that date.

Survey wage rates will remain in effect and will not change until a new survey is conducted.

WAGE DETERMINATION APPEALS PROCESS

1.) Has there been an initial decision in the matter? This can be:

* an existing published wage determination

EXHIBIT D TO CONTRACT AGREEMENT

* a survey underlying a wage determination
* a Wage and Hour Division letter setting forth a position on a wage determination matter
* a conformance (additional classification and rate) ruling

On survey related matters, initial contact, including requests for summaries of surveys, should be with the Wage and Hour Regional Office for the area in which the survey was conducted because those Regional Offices have responsibility for the Davis-Bacon survey program. If the response from this initial contact is not satisfactory, then the process described in 2.) and 3.) should be followed.

With regard to any other matter not yet ripe for the formal process described here, initial contact should be with the Branch of Construction Wage Determinations. Write to:

Branch of Construction Wage Determinations
Wage and Hour Division
U.S. Department of Labor
200 Constitution Avenue, N.W.
Washington, DC 20210

2.) If the answer to the question in 1.) is yes, then an interested party (those affected by the action) can request review and reconsideration from the Wage and Hour Administrator (See 29 CFR Part 1.8 and 29 CFR Part 7). Write to:

Wage and Hour Administrator
U.S. Department of Labor
200 Constitution Avenue, N.W.
Washington, DC 20210

The request should be accompanied by a full statement of the interested party's position and by any information (wage payment data, project description, area practice material, etc.) that the requestor considers relevant to the issue.

3.) If the decision of the Administrator is not favorable, an interested party may appeal directly to the Administrative Review Board (formerly the Wage Appeals Board). Write to:

Administrative Review Board
U.S. Department of Labor
200 Constitution Avenue, N.W.
Washington, DC 20210

4.) All decisions by the Administrative Review Board are final.

==========

END OF GENERAL DECISION

EXHIBIT D TO CONTRACT AGREEMENT

Certified Statement Pursuant to Neb. Rev. Stat. § 77-1323

§ 77-1323 Every person, partnership, limited liability company, association, or corporation furnishing labor or material in the repair, alteration, improvement, erection, or construction of any public improvement shall furnish a certified statement to be attached to the contract that all equipment to be used on the project, except that acquired since the assessment date, has been assessed for taxation for the current year, giving the county where assessed.

Pursuant to Neb. Rev. Stat. § 77-1323, I, _____, do hereby certify that all equipment to be used on JPA Project/Bid No. _____, except that equipment acquired since the assessment date, has been assessed for taxation for the current year, in Lancaster County, Nebraska.

DATED this ____ day of _____, 20___.

By: _____

Title:_____

STATE OF NEBRASKA)
) ss.
COUNTY OF _____)

On _____, 20___, before me, the undersigned Notary Public duly commissioned for and qualified in said County, personally came _____, to me known to be the identical person, whose name is affixed to the foregoing instrument and acknowledged the execution thereof to be his voluntary act and deed.

Witness my hand and notarial seal the day and year last above written.

_____
Notary Public

(S E A L)

LINCOLN
Haymarket Infrastructure Team©

Special Provisions

West Haymarket Joint Public Agency (2012)

Haymarket Infrastructure Improvements

Parking Lot, Festival Space & Pedestrian Bridge Landscape Planting

Project No. 870201B

Bid No. 12-196

November 2012

EXHIBIT D TO CONTRACT AGREEMENT

SPECIAL PROVISIONS

WEST HAYMARKET JOINT PUBLIC AGENCY (2012)

HAYMARKET INFRASTRUCTURE IMPROVEMENTS
PARKING LOT, FESTIVAL SPACE & PEDESTRAIN BRIDGE
LANDSCAPE PLANTING
PROJECT NO. 870201B

GENERAL CONTRACT REQUIREMENTS

The work as detailed on the plans shall be completed in accordance with the requirements of the 2011 City of Lincoln Standard Specifications for Municipal Construction, as supplemented by the Nebraska Department of Road's 2007 Standard Specifications for Highway Construction. The 2011 City of Lincoln Standard Specifications for Municipal Construction and the Nebraska Department of Road's 2007 Standard Specifications for Highway Construction (NDOR Standard Specifications), including all amendments, Supplemental Specifications and additions thereto effective at the date of the contract, the Special Provisions, plans, and all supplementary documents are essential parts of the contract. A requirement occurring in one is as binding as though occurring in all. They are intended to be complementary and to describe and provide for a complete project.

In addition the geotechnical report prepared for the West Haymarket Project is hereby attached as part of the contract documents and the recommendations provided within shall be followed in completing the work. This report was prepared specifically for the work associated with the grading and embankment construction project. The recommendations contained within the geotechnical report with respect to compaction and placement of fills as well as preparation of subgrades shall supersede the requirements outlined in the City of Lincoln Standard Specifications for Municipal Construction.

The Contractor shall not take advantage of any apparent error, discrepancy or omission in the plan, specifications or geotechnical reports. Upon discovery of such an error, discrepancy or omission, the Contractor shall notify the Engineer immediately. The Engineer will then make such corrections or interpretations as necessary to fulfill the intent of the plans and specifications.

Materials or work described in words which, so applied, have known technical or trade meaning shall be held to refer to such recognized standards.

Figured dimensions on the plans shall be taken as correct but shall be checked by the Contractor before starting construction. Any errors, omissions, or discrepancies shall be brought to the attention of the Architect and the Architect's decision thereon shall be final. Correction of errors or omissions on the drawings or specifications may be made by the Architect when such correction is necessary for the proper execution of the work

Any reference the City, or OWNER, in the City of Lincoln Standard Specifications for Municipal Construction shall be considered reference to the West Haymarket Joint Public Agency (JPA), its employees, or representatives hired by the JPA as a consultant for construction project management, observation or testing services. The JPA's address is 555 South 10th Street, Lincoln, Nebraska 68508.

JPA: JPA shall mean the West Haymarket Joint Public Agency, a joint administrative entity under the Interlocal Cooperation Act, comprised of the City of Lincoln and the University of Nebraska – Lincoln for the purpose of implementing and overseeing the operation of the West Haymarket arena and infrastructure improvement projects.

The Contractor shall be responsible for printing all copies of the plans, Special Provisions and other contract documents necessary for their use and the use of their subcontractors in completion of the work. The JPA will not provide any hard copies of the plans or Special Provisions and the PDF documents provided for bidding shall be used by the Contractor to produce the required number of plan sets for use in construction of the project.

BONDING PERIOD

The City of Lincoln Standard Specifications, General Provisions and Requirements have been amended as follows:

A. Award and Execution of Contract.

B. Construction Performance and Construction Payment Bonds and Execution of Contract.

Within **five (5) days** after the acceptance of the bid, the successful Bidder must execute a written Contract between the Bidder and the JPA, said Contract will incorporate the JPA's Contract Documents and be on forms provided by the JPA, Construction Performance and Construction Payment Bonds, in a sum not less than the contract price, executed by the Bidder and by a corporate surety company authorized to transact business in the State of Nebraska.

PRE-BID MEETING

A pre-bid meeting for the project has been scheduled in the afternoon on Tuesday November 20, 2012 at The Clark Enersen Partners in the 2nd floor Community Design Studio. The Clark Enersen Partners is located at 1010 Lincoln Mall in Lincoln, NE. The pre-bid meeting will begin at 1:30 pm and will provide an overview of the project and other special or unique requirements. Representatives from the design team, the JPA and the City will be at the meeting to answer questions from prospective bidders. All interested bidders are encouraged to review the plans and Special Provisions prior to the meeting so that any questions they have may be answered either at the meeting or through addendum to the bidding documents. Following the meeting at the Clark Enersen Partners interested bidders may visit the site with representatives from the design/construction management team to review existing conditions.

All questions regarding the project shall be submitted to the Purchasing Agent no later than 12:00 Noon on Thursday November 30, 2012. Questions submitted after this date and time will not receive responses prior to bids being received for this project.

CHANGES IN WORK

As part of the normal prosecution of site and utility work, unforeseen conditions may be encountered that could not reasonably been anticipated based upon the available information at the time the plans and contract documents were prepared. To address these conditions additional work may be necessary that was not included within the original project scope of work as outlined in the contract documents.

Prior to performing the additional work the Contractor or JPA construction site representative shall contact the Program Manager and provide them with a written description of the work, an approximate cost to complete the additional work and any request for additional contract time required to complete the work. The Program Manager shall review the information and provide the Contractor written direction on how to proceed.

The Contractor can expect the Program Manager to respond to the additional work request within the following timeframe following receipt of information and provide the Contractor direction on how to proceed:

- For minor changes in the work that have an additional cost less than $25,000 and that can be completed using existing unit prices, a negotiated price or on actual time and expense, the Contractor can expect a response within 24 hours from the time the Program Manager receives the information from the Contractor or JPA construction site representative.
- For major changes in the work that have an additional cost between $25,000 and $100,000, the Contractor can expect a response within 72 hours from the time the Program Manager receives the information from the Contractor or JPA construction site representative.

- Major changes in the work greater than $100,000 will require approval by the JPA Board. This will require 21 days from the time the Program Manager receives the information from the Contractor or JPA construction site representative.

All approved additional work shall be document in writing. Additional work completed by the Contractor without the prior approval of the Program Manager shall not be paid for under this contract. The Program Manager point of contact for the review and approval of all changes in the work under this contract is Caleb Swanson. He can be contacted at 402-477-0487. In the event the Contractor or JPA site representative cannot reach Caleb they shall contact Paula Yancey at 210-601-3053 or PC Sports at 402-477-0487.

SUBSTANTIAL AND FINAL COMPLETION

The final completion date for this project is based upon the Contractor receiving a Notice to Proceed (NTP) with the work on or before January 7, 2013. If a NTP is received after that date than the substantial and final completion dates may be modified by a change order to the contract as approved by the Program Manager.

Substantial completion of the parking lot and bridge (by others) is set to be September 6, 2013. Substantial completion of the irrigation system, seeding, sodding on the pedestrian ramp embankment and bioretention planting shall be completed on or before September 20, 2013.

Final completion of this project shall include completion of the landscape planting materials, topsoil placement in parking lot islands, remaining sodding and all other incidental items necessary to allow the new pedestrian path, bridge and parking lot be used to support an event at the arena. Upon reaching final completion, the project site shall be available for use to support an event at the new arena or for use by the JPA or City as a parking lot or festival area.

Work outlined for final completion of the project shall be complete on or before November 20, 2013.

DISCOVERY OF ARCHAEOLOGICAL AND OTHER HISTORICAL RESOURCES

The existing project area may have remnants of previous historical significance, archaeological articles and other items of cultural significance that will need to be preserved. Should the contractor encounter any fossils, Native American relics, or other articles of historical, geological or cultural interest then the Contractor shall immediately suspend work in the area and promptly contact the Engineer for direction on how to proceed. The Engineer shall consult with the appropriate historical and cultural resource agencies to determine a course of action and to make arrangement for removal and preservation of the articles if necessary. All such articles shall become the property of the JPA.

SPECIAL PROSECUTION AND PROGRESS – CONSTRUCTION PHASING

The following prosecution and progress of work shall be used in developing the baseline schedule for the project. The Contractor will be required to generally proceed with sequencing the construction work as shown on the phasing plans unless otherwise approved by the Engineer.

General
All work on this project shall be coordinated with the Parking Lot and Bridge Contractor.

Access During Construction
The Contractor shall not close any portion of the public roads or begin any work which may impact drive access to adjacent properties without the permission of the Architect. The Contractor shall at all times, to the extent practical, provide facilities of ingress and egress to and from the public street to maintain access to adjacent properties throughout the duration of the project as noted on the plans or as directed by the Architect.

During the course of this work, the Contractor shall maintain all construction entrances to ensure that dirt track off from the site onto the public roads is minimized. In addition the Contractor shall be required to review the adjacent public streets on a daily basis to verify that there is not any dirt being tracked off from the site onto these roadways. Any dirt track off from the site shall be immediately cleaned up by the Contractor as directed by the Architect.

Access to the site is proposed from the existing roadway that runs along the north side of the City of Lincoln's 901 building. An existing drive at the west side of the 901 complex will be used as one access point to the site. In addition an existing access road located to the east of the 901 complex shall provide the second access point to the site.

The primary access to the site shall be from Sun Valley Boulevard at Line Drive. The Contractor shall utilize 4th Street south of Line Drive and the existing roadway along the north side of the City of Lincoln's 901 building to access the site. The Contractor shall not operate trucks or equipment along 6th Street to access the site unless otherwise approved in advance by the Architect. The Contractor shall coordinate their activities closely with the City's personnel at the 901 facility to ensure that the project does not adversely impact their operations.

Pedestrian Accommodations
Existing pedestrian facilities that are located along the north side of the 901 building shall not be disturbed as part of this project. The Contractor shall exercise care when entering and exiting the site and be aware of potential pedestrians and bicyclists using the sidewalks and bike paths within the area.

Work Site Constraints
The following are general constraints that the Contractor shall comply with during the completion of all phases of the work on this project:

- Access needs shall be maintained to the City of Lincoln's 901 Building and yard as well as the Haymarket Park area at all times.
- The Contractor shall maintain existing site fencing around the 901 Building south lot at all times so that this is a secured area outside or normal business hours.
- The Contractor shall coordinate their operations at the site with the University Athletic Department for work at the site during any home Nebraska Baseball games. This may require the Contractor to limit the number of trips in and out of the site for heavy equipment during these events and shall also require the Contractor to have all roadways clean and free of dirt prior to the event.
- The Contractor shall coordinate their operations at the site with representatives of the Salt Dogs Baseball organization for work at the site during any home Salt Dogs Baseball games. This may require the Contractor to limit the number of trips in an out of the site for heavy equipment during those events and shall also require the Contractor to have all roadways clean and free of dirt prior the event.
- The Contractor shall coordinate their activities with the City of Lincoln and JPA with respect to other special activities at the Haymarket Park complex. This may require the Contractor to limit the number of trips in and out of the site for heavy equipment during these events and shall also require the Contractor to have all roadways clean and free of dirt prior to the event.
- The Contractor shall coordinate with BNSF as necessary for access to the BNSF property at all times during the course of construction.
- The Contractor shall coordinate with the parking lot and pedestrian bridge Contractor (TBD) for the scheduling and access to areas of work as they become available.

General Construction Sequencing
The Contractor shall be responsible for developing the phasing and sequencing of the work on this project that is required to meet the stipulated substantial and final completion dates. General constraints that will apply to this work and that should be taken into consideration as the schedule is developed are as follows:

- Access needs shall be maintained to the City of Lincoln's 901 building and yard as well as the Haymarket Park area at all times.

- The Contractor shall maintain existing site fencing around the 901 building's south lot at all times so that this is a secured area outside of normal business hours.
- The Contractor shall not operate any equipment in or out of the site on the day of any home University of Nebraska Football game or on the day of any special activity at the Haymarket Park complex.

Prior to the start of landscape plantings, the Contractor shall install the necessary sediment and erosion control items around the perimeter of the parking lot and at all drainage outlets to protect and divert seeding areas.

A critical path item for this project is establishing the seeding and sodding work on the pedestrian bridge embankment. It is anticipated that this will need to be completed as soon as the grading operations are completed by the parking lot contractor.

STATUS OF RIGHT-OF-WAY

All work to be completed shall be performed on property owned by the JPA or the City of Lincoln with the exception being that portion of BNSF owned property where the JPA has obtained a right-of-entry specifically for construction of the West Haymarket Projects.

STATUS OF UTILITIES

The following information is current as of November 2, 2012. The Contractor should request a utility status update at the project pre-construction conference, and/or prior to starting work. The Contractor shall coordinate all construction activities with affected utilities that have identified relocations which are to be completed concurrent with the project.

Utilities known to have facilities in the project area:

Private Utilities
The following is a summary of private utilities that may have facilities in the area. Some of these utilities may need to be relocated to accommodate construction of the new storm sewers or other items on the project. The Contractor shall take into consideration the associated durations of utility relocations, and these associated durations should be considered in the baseline schedule, and prosecution of the Work. The Contractor shall conduct ongoing coordination meetings with all utility owners to facilitate these relocations.

Black Hills Energy
Black Hills does not have any facilities within the limits of the proposed construction and should not be impacted by this project.

The point of contact for Black Hills Energy is:

Contact: Randy Kreifels
Phone: (402) 437-1715

Lincoln Electric System (LES)
LES has an existing 34.5 kV overhead power line along the west end of the site outside the limits of the proposed grading. The Contractor shall be aware of this line and review the location of poles, down guys and clearances with respect to the construction of the internal haul roads and site access. LES also has existing buried conduits within the limits of the project that follow the 78" sanitary sewer liner along the western fringe of the project area. This conduit will be abandoned with the existing conduits reconstructed at the southern edge of the grading. The future project will relocate these conduits around the proposed parking lot/festival space.
There are no other LES facilities within the limits of the proposed work.

The point of contact for LES is:

Contact: Steve Wallingford
Phone: (402) 467-7680

Windstream

Windstream does not have any known utilities within the project area.

The point of contact for Windstream is:

Contact: Ken Adams
Phone: (402) 429-0753

Time Warner Cable (TWC)
Time Warner Cable has a buried line that runs along the northeast edge of the project site. This line may be relocated to accommodate the construction of the new storm sewers as part of the parking lot construction project by others. Time Warner will relocate this line as necessary to accommodate the storm sewer construction on the parking lot construction project by others. This line is proposed to be abandoned in the future when the City's 901 building is relocated.

The point of contact for TWC is:

Contact: Mike Willey
Phone: (402) 421-0394 – office, (402) 651-9328 - cell

UTILITIES

Add the following paragraphs to Article II, Section A (EXAMINATION OF PLANS, SPECIFICATIONS, SPECIAL PROVISIONS, AND SITE OF WORK):

The CONTRACTOR shall notify the Digger's Hotline of Nebraska (HOTLINE), Phone Number 1-800-331-5666, at least 48 hours in advance of the commencement of work at any site to allow the member utilities to examine the construction site and mark the location of the utilities' respective facilities. The CONTRACTOR shall also notify the BNSF Railway as stipulated in the Contractor Requirements for work on the BNSF property that is included with these Special Provisions.

The CONTRACTOR acknowledges that some (or all) of the utility companies, with facilities shown on the drawings may not be members of the Hotline and, therefore, not automatically contacted by the above-referenced telephone number. The CONTRACTOR shall be responsible for making itself aware of utility company facilities not reported by the Hotline, and shall be liable for any and all damages stemming from repair or delay costs or any other expenses resulting from the unanticipated discovery of underground utilities. The CONTRACTOR shall also be responsible for verifying that each utility has responded to such notification.

PERMITS AND LICENSES

Add the following to Article VI, Section M. (PERMITS AND LICENSES):

The OWNER will provide the following permits:

1) NPDES Construction Storm Water Permit
2) NPDES Dewatering Permit
3) Floodplain Permit

The CONTRACTOR shall be responsible for complying with the requirements of all permits acquired by the JPA.

The CONTRACTOR shall acquire all permits required by Laws or Regulations, including, without limitation, the following specific permits (if applicable):

1) Certificates and permits are required for uses such as, but not limited to:
   a) Fuel burning equipment
   b) Gasoline and petroleum distillate storage containers
   c) Land disturbing activities
   d) Odors
2) All associated building demolition permits
3) City, State, and County Transportation Encroachment permits
4) Permit-Required Confined Space
   The workplace in which the WORK is to be performed may contain permit-required confined spaces (permit spaces) as defined 29 CFR 1910.146 and, if so, permit space entry is allowed only through compliance with a confined space entry program meeting the requirements of 29 CFR 1910.146. Contractor shall submit a confined space entry program or submit in writing that compliance with the City's program will be made.
5) Dewatering Permits or notifications as required by the Lower Platte South Natural Resources District.

STORMWATER POLLUTION PREVENTION PLAN

The Contractor shall understand the terms and conditions of the general National Pollutant Discharge Elimination System (NPDES) permit that authorizes the stormwater discharges associated with the industrial activity from the construction site. For reference the general permit is posted on the City's web site, www.lincoln.ne.gov ; keyword: NPDES.

The Parking Lot and Bridge Contractor will be the responsible party for maintain the records and logs for this project.

Additionally, the Contractor, as evidenced by their signature on this proposal, agrees and understands that, if awarded the contract on this project, he/she:

1. becomes a co-permittee, along with the owner(s), to the Nebraska Department of Environmental Quality NPDES General Permit for Stormwater Discharge from construction sites on this project; and

2. is legally bound to comply with the Clean Water Act to ensure compliance with the terms and conditions of the stormwater pollution prevention plan as developed under the NPDES permit and the terms of the NPDES permit; and

3. will hold owners harmless for damages and fines arising as a result of noncompliance with the terms of the stormwater permits and authorizations associated with the work on this project; and

4. shall be responsible for the maintenance of the sediment control measures included in the landscape project until permanent stabilization and seeding is established; and

5. shall update the Parking Lot and Bridge Contractor immediately following any changes or additions to the plan.

WORKER VISIBILITY

Pursuant to Part 634, Title 23, Code of Federal Regulations, the following modified rule is being implemented:

Effective on January 1, 2008, all workers within the right-of-way who are exposed either to traffic (vehicles using the highway for purposes of travel) or to construction equipment within the work area shall wear high-visibility safety apparel.

High-visibility safety apparel is defined to mean personal protective safety clothing that:

1 - is intended to provide conspicuity during both daytime and nighttime usage, and

2 - meets the Performance Class 2 or Class 3 requirements of the ANSI/ISEA 107-2004 publication entitled "American National Standards for High-Visibility Safety Apparel and Headwear."

If the Contractor fails to comply with the worker visibility requirements and as a result, Federal and State authorities withhold Federal Funds, then JPA reserves the right to seek reimbursement from the Contractor for the loss of federal funds that are attributed to the Contractor's non-compliance.

COORDINATION WITH OTHERS

The Contractor shall coordinate their work with the City of Lincoln and the operations at the 901 facility. This will include access across the west end of the site as well as all work associated with seeding along the bridge embankment.

The City's point of contact for the 901 facility is:

Scott Opfer, Engineering Services – (402) 441-7711

TECHNICAL PROVISIONS

The following Special Provisions amend or supplement the 2011 City of Lincoln Standard Specifications for Municipal Construction and the State of Nebraska Standard Specifications for Highway Construction, 2007 Edition. All provisions which are not so amended or supplemented remain in full force and effect.

CONSTRUCTION STAKING

The Contractor shall use the horizontal and vertical control points as shown on the plans for use in establishing the exact location and elevations for the project. The Contractor shall be responsible for preserving (or reestablishing) these control points if necessary. The Contractor shall use this control to provide all construction staking that is required for the project. This shall include staking for bioretention construction and all other survey work to complete the project in accordance with the details shown on the plans.

The Contractor shall be responsible for the placement and preservation of adequate ties and references necessary to complete his work. Any additional stakes, templates and other materials necessary for marking and maintaining all reference points and lines shall be the responsibility of the Contractor. The Contractor shall be solely and completely responsible for the accuracy of the line and grade for all features of the work. All work shall be completed to the lines, grades, and elevations indicated on the drawings. The Contractor shall remove and reconstruct work that is improperly located at his expense.

Basis of Payment

Construction staking shall not be measured, but shall be paid for at the Contract Lump Sum amount bid for the pay item "Construction Staking". The amount of the lump sum to be included in each partial payment shall be in proportion to the value of the work completed with respect to the total amount of the original bid.

DIVERSION AND CARE OF WATER

Methods and details for care and diversion of water are not detailed on the plans. Full responsibility for the diversion and care of water from whatever source, including, but not limited to, direct rainfall, groundwater, surface runoff and sources outside of the construction area shall be borne by the Contractor until completion of work under this contract.

The Contractor shall provide all materials, labor, and equipment, and perform all work necessary to facilitate construction and to protect the work in progress from damage by water. The Contractor shall make his own investigation and determination of existing and anticipated conditions concerning care of water. Plans for diversion and care of water during construction shall be submitted to the Engineer, for information only, within 10 calendar days after receipt of Notice to Proceed, and shall show location, material, and method for dewatering the work area and disposal of the water. Discharge of water shall comply with all provisions outlined in the NPDES Permits that have been issued for the project. Direct payment will not be made for diversion and care of water. Work associated with diversion and care of water shall be considered incidental to the work.

DUST CONTROL DURING CONSTRUCTION

The Lincoln /Lancaster County Health Department has Air Pollution Regulations that provide requirements for dust control that need to be followed by contractors working on the project. No dust that is generated by the construction activities shall be allowed to migrate off the site onto adjacent properties. This will require the Contractor to provide some means for dust control at the site at all time during the work. These requirements apply to work not only at the Haymarket site but also at any off-site borrow pits where material would be loaded and along any routes used to haul the material to the site. At this time there is not a permit required by this agency for a fugitive dust control permit. The following is a portion of the regulations pertaining to dust control:

SECTION 32. DUST -- DUTY TO PREVENT ESCAPE OF

(A) Handling, Transportation, Storing. No person may cause or permit the handling, transporting or storage of any material in a manner which may allow particulate matter to become airborne in such quantities and concentrations that it remains visible in the ambient air beyond the premises where it originates.

(B) Construction, Use, Repair, Demolition. No person may cause or permit a building or its appurtenances or a road, or a driveway, or an open area to be constructed, used, repaired or demolished without applying all such reasonable measures to prevent particulate matter from becoming airborne so that it remains visible beyond the premises where it originates. The Director may require such reasonable measures as may be necessary to prevent particulate matter from becoming airborne, including but not limited to paving or frequent cleaning of roads, driveways and parking lots; application of dust-free surfaces; application of water; and the planting and maintenance of vegetative ground cover.

(C) Notwithstanding any other provisions of this section, the Department shall not regulate emissions from normal farming practices, farm crop drying and handling, or animal feeding activities, provided that reasonable and practical measures to limit particulate matter from such sources are utilized.

Ref: Title 129, Chapter 32, Nebraska Department of Environmental Quality

EARTHWORK CONSTRUCTION

Earthwork on the project shall be measured and paid for as generally outlined in the Standard Specification for Municipal Construction and as modified by these Special Provisions.

Excavation
The excavation quantity shall include the necessary excavation at the site to provide the finished grades and elevations as shown on the plans. This work shall be completed in accordance with the requirements outlined in the City of Lincoln Standard Specifications and the Geotechnical Report. **During the course of the project the Contractor shall not haul any excavated material off-site without the prior approval of the West Haymarket Environmental Team**. As such, the Contractor shall place soils on-site as indicated on the plans.

Basis of Payment:
Measurement for Excavation is an established quantity based upon the lines and grades shown on the cross sections and the grading plan for the project. Payment for Excavation shall be made at the contract unit price bid per cubic yard for the pay item "Excavation". Such payment shall be full compensation for furnishing, loading, hauling and incorporation of the excavated material into the construction of the new fills and embankments on the project. This shall include all necessary working of the material to obtain proper moisture content, providing water or drying of the soils as necessary for compaction, and compaction of the fill material as directed by the Engineer to provide a uniform compacted embankment in accordance with the recommendations outlined in the Geotechnical Report.

SCOUR STOP

The Contractor shall furnish and install a transition mat erosion control system at the outlet of storm sewers and flumes at the locations shown on the plans. The transition mat system shall consist of ScourStop (www.scourstop.com) semi rigid mat placed over a turf reinforcement mat over seeded or sodded turf areas at the outlets. The ScourStop semi rigid mat shall be installed over the Sod and seeding at the outlets of the flumes or storm sewers as shown on the plans and in accordance with the requirements of the manufacturer. The Contractor shall build a graded swale from the end of the transition mat system to drain to the adjacent ditch.

Basis of Payment
Measurement and payment for the ScourStop transition mat erosion control system shall be made per square foot in accordance with the contract unit price bid for the item "Erosion Stop, Type A". Said payment shall be full compensation for furnishing all labor, equipment and materials associated with installation of the transition mat erosion control system including ScourStop semi rigid mat.

SELECT TOPSOIL

Select Topsoil shall be fertile, friable, natural loam, dark in color, free of subsoil, clay lumps, brush, weeds, and other debris; and free of roots, stumps, stones larger than one inch in any dimension; and free of other extraneous or toxic matter harmful to plant growth. Topsoil should be obtained from local sources. It should have an acidity range (pH) of 5.5 – 8.0, and an organic matter content between 2 and 8 percent. Loam topsoil must have 7 to 40 percent clay, 28 to 60 percent silt, and less than 52 percent sand particles. Not more than 10 percent of topsoil weight can be gravel or stones.

1. Particle Size: provide topsoil which conforms with the following categories:
    a. Clay: 0.002 mm and smaller.
    b. Silt: 0.002 to 0.02 mm.
    c. Sand: 0.02 to 0.2 mm.
2. Proposed topsoil material shall be inspected and approved by the Architect.
3. Depth of Select Topsoil shall be 24" min.

Basis of Payment:
Select topsoil called for on the plans, completed in conformance with the plans and Standard Specifications, and acceptable to the Landscape Architect shall be measured and paid for at the contract unit price bid per cubic yard for SELECT TOPSOIL. Such payment shall be full compensation for all labor, equipment, tools, materials, and incidentals necessary to complete the Work.

SEEDING AND SODDING

Amend Chapter 30 with the following:

30.01 Quality Assurance

- In addition, Contractor must have a minimum of 5 years experience in turf installation

30.04 Materials (General Information), C. Sod (General)

- Sod for this project will be a Rhizomatous Tall Fescue. Provide a blend of the top 50 performers of Fescue. Provide a minimum of (2) laterally spreading or rhizomatous varieties. Submit mix design for approval during the shop drawing review process.

30.10 Acceptance and Establishment Period

- Amend the establishment period for the following:
    - Seed Type "E" (1 year)
    - Seed Type "Cover Crop" (30 days)
    - Seed Type "Tall Grass" (1 years)
    - Seed Type "Bioretention" (1 years)
    - Sod (60 days)

30.11 Replacement of Material and Guarantee Period

- Amend the replacement and guarantee period for the following:
    - Seed Type "E" (1 year)
    - Seed Type "Cover Crop" (30 days)
    - Seed Type "Tall Grass" (2 years)

- Seed Type "Bioretention" (2 years)
- Sod (60 days)

LANDSCAPE WORK

Amend Chapter 31 with the following:

31.01 Quality Assurance

- In addition, Contractor must have a minimum of 5 years experience in turf installation and be a member in good standing of either the Professional Landcare Network or the American Nursery and Landscape Association.
- Contractor must conduct a pre-installation conference at project site or nursery with landscape architect and the City's project Manager to review plant material, installation methods and plant layout.

Replace planting details 1-4 with details in the drawing set.

31.06 Location of Plant Material

- Contractor will be responsible for staking tree locations. The landscape architect will approve tree staking prior to planting.

31.09 Planting Perennial and Ornamental Grasses

- Amend soil bed prep from 8" to 24"
- Amend mulch depth from 2" to 3"

IRRIGATION WORK

Amend Chapter 33 with the following:

33.02 Materials

- In addition, add the following acceptable manufactures
  - Hunter
  - Netafim

BIORETENTION CONSTRUCTION

GENERAL

RELATED DOCUMENTS

Drawings and general provisions of Contract, including General and Supplementary Conditions and Division 1 Specification Sections, apply to this Section.

SUMMARY

This Section includes the following:

- Soil Mix
- Compost
- Fine Sand
- Rock Filter

- Filter Fabric
- Mulch

Related Sections included the following:

- High density polyethylene (HDPE) pipe.

SUBMITTALS

Product Data: For each type of product indicated.

- Compost testing results.

Photo documentation that the bioswale subgrade was ripped prior to subdrainage placement and bioswale soil installation.

Maintenance Instructions: Recommended procedures to be established by Owner for maintenance of bioretention areas during a calendar year. Submit before start of required maintenance periods.

QUALITY ASSURANCE

Pre-installation Conference: Before installing, conduct conference at Project site to comply with requirements of Division 1 Section "Project Meetings." Notify participants at least 5 working days before conference.

DELIVERY, STORAGE AND HANDLING

Packaged Materials: Deliver packaged materials in containers. Protect materials from deterioration during delivery and while stored at site.

Bulk Materials:

- Do not dump or store bulk materials near structures, utilities, walkways and pavements including pervious concrete unit pavement, or on existing turf areas or plants.
- Provide erosion-control measures to prevent erosion or displacement of bulk materials, discharge or soil-bearing water runoff, and airborne dust reaching adjacent properties, water conveyance systems, or walkways.

PROJECT CONDITIONS

Coordinate bioretention locations, installation, and sequencing with other work to avoid interference and to assure proper placement.

SPECIAL PROJECT WARRANTY

The contractor shall provide replacement soil for all bioretention areas which may wash away or settle during the first 2 years following the completion and acceptance of bioretention construction.

- Notify Landscape Architect for inspection and acceptance

Completion of the 2 year warranty: Landscape Architect will make an inspection of the bioretention areas for acceptability. The contractor will be notified in writing of any material that shall be replaced as described in paragraph 3.

PRODUCTS

Soil Mix:

- Planting mix of Fine Sand and Compost mixed to the following proportion.

Material	%by volume
Compost	30%
Fine Sand	70%

- Planting mix shall be thoroughly mixed
- Final mix shall have a pH of between 5.5 and 8.0
- Final mix shall have an organic matter content (tested by ignition) of between 3 and 5%. Sample of final mix test for organic matter shall be screen through a ¼" mesh rather then the standard 2mm screen.
- Final mix shall contain no other material or substances that may be harmful to plant growth, or prove a hindrance to the planting or maintenance operations.
- Provide a two gallon sample of each mix ratio with the required soil test results.

Compost:

- Shall be mature, weed free, and produced by aerobic decomposition of organic matter. Compost feedstock shall be yard waste trimmings and/or source-separated municipal solid waste to produce a fugally dominated compost. The product must not carry and visible refuse or other physical contaminants, substances toxic to plants, or over 5% sand, silt, clay or rock material by dry weight. The product shall possess no objectionable odors. The product must meet all applicable USEPA CRF, Title 40, Part 503 Standards for Class A biosolids. The moisture level shall be such that no visible water or dust is produced when handling the material.
- Compost shall be dark brown in color, approximately the color of dark chocolate candy (70% chocolate). Black compost and compost the color of milk chocolate shall be rejected.
- Compost shall have a strong aerobic (sweet) odor. Compost lacking a strong aerobic odor or which has an anaerobic (sour) odor shall be rejected.
- Testing: The results of Compost analysis shall be provided by the Compost supplier. Before delivery of the Compost, the supplier must provide the following documentation:

    - Feedstock percentage in the final Compost product
    - A statement that the Compost meets federal and state health and safety regulations
    - A copy of the lab analysis, less than four months old, performed by a Seal of Testing Assurance Certified Laboratory verifying that the Compost meets the following requirements:

Physical Requirements for Compost Organic Matter

Parameter	Range	Testing Method
pH	5.5-8.0	TMECC 4.11A
Soluble Salt Concentration	<4dS/m	TMECC 4.10-A
Moisture	35-55% wet weight basis	
Organic Matter	>35% dry weight basis	TMECC 5.07-A
Carbon to nitrogen ratio	15:1-30:1	
Particle Size	99% pass through 2 inch screen or smaller; 25% pass through 3/8 inch screen or smaller	TMECC 2.02-B
Maturity Index	6 to 8 Solvita	
Physical contaminants (man made inerts)	<1% dry weight basis	TMECC 3.08-A
Chemical contaminants	Meet or exceed US EPA Class A standard, 40 CFR§ 503.13,	Tables 1 and 3 levels
Arsenic	<41 ppm	TMECC 4.06-AS
Cadmium	< 39 ppm	TMECC 4.06-CD
Copper	<1,500 ppm	TMECC 4.05-CU
Lead	<300 ppm	TMECC 4.06-PB
Mercury	<17 ppm	TMECC 4.06-HG
Molybdenum	<75 ppm	TMECC 4.05-MO
Nickel	<420 ppm	TMECC 4.06-NI
Selenium	<100 ppm	TMECC 4.06-SE
Zinc	<2,800 ppm	TMECC 4.06-ZN
Biological contaminants	Meet or exceed US EPA Class A standard, 40 CFR§ (pathogens) 503.32(a) levels:	
Fecal coliform	<1,000 MPN per gram, by dry weight basis	TMECC 7.01
Salmonella	<3 MPN per 4 grams, dry weight basis	TMECC 7.02

- Compost testing methodologies and sampling procedures shall be as provided in Test Methods for the Examination of Compost and Compost (TMECC), as published by the US Composting Council.
- Provide a one gallon sample with manufactures literature and material certification that the product meets the requirements.

Fine Sand:

- Fine concrete sand, ASTM C-33 Fine Aggregate, with a Fines Modulus Index of 2.3 and 3.1
- Sands shall be clean, sharp, natural sands free of limestone, shale and slate particles. Sand pH shall be lower than 7.5.

Provide the following particle size distribution:

Sieve:	Percent Passing:
3/8" (9.5mm)	100
No 4 (4.75mm)	95-100
No 8 (2.36mm)	80-100
No 16 (1.18mm)	50-85
No 30 (.60mm)	25-60
No 50 (.30mm)	5-30
No 100 (.15mm)	0-10

- Provide a two gallon sample with manufacturer's literature and material certification that the product meets the requirements.

Rock Filters:

- Rock Filter 1: double washed, free draining #8 aggregate
- Rock Filter 2: double washed, free draining #57 aggregate

Filter Fabric: meets the following requirements:

- ASTM D-4632 (tensile strength – 205 lb)
- ASTM D-6241 (puncture strength – 500 lb)
- ASTM D-3786 (Mullen burst strength – 350 PSI)
- Woven
- Maintains 75 GPM per s.f. flow rate

Mulch: As described in Chapter 31 – Landscape Work

EXECUTION

EXAMINATION

Examine areas and conditions for compliance with requirements for earthwork, pavement work, erosion control, seeding and other conditions affecting performance of work.

- Do not begin installation before final grading is completed unless otherwise permitted by Landscape Architect

Proceed with installation only after unsatisfactory conditions have been removed.

PREPARATION

Outline and stake location of bioretention area for Landscape Architect approval.

INSTALLATION

Rip bottom of the Bioretention cells to a minimum depth of 18" prior to installation of soils.

Install bioretention locations indicated and noted on the drawings

Installation of soils must be done in a manner that will ensure adequate Infiltration

Installed in 12" to 18" lifts and lightly compacted. Minimal compaction effort can be applied to the soil by tamping with a bucket from a dozer or backhoe

Lifts are not compacted but performed to prevent possibility of excessive settlement

No additional manual compaction of soil is necessary. Rake soil material as needed to level out. Overfill above the proposed surface invert to accommodate natural settlement to proper grade. Depending upon the soil material, up to 20% natural compaction may occur

Sieve analysis, pH, porosity, permeability and organic matter tests must be performed per each bioretention area.

It is very important to minimize compaction of both the base of the bioretention area and the required backfill. When possible, use excavation hoes to remove original soil. If bioretention areas are excavated using a loader, equipment with narrow tracks or narrow tires, rubber tires with large lugs, or high pressure tires will cause excessive compaction resulting in reducing infiltration rates and storage volumes and is not acceptable. Compaction will significantly contribute to design failure. Compaction can be alleviated at the base of the bio retention facility by using a primary tilling operation such as a Chisel Plow, Ripper, or Subsoiler. These tilling operations are to refracture the soil profile through the 12 inch compaction zone. Substitute methods must be approved by the landscape architect. Rototillers typically do not till deep enough to reduce the effects of compaction from heavy equipment.

When back filling the bioretention facility, do not use heavy equipment within the bioretention basin. Heavy equipment can be used around the perimeter of the basin to supply soils and sand. Grade bioretention materials with light equipment such as a compact loader or a dozer/ loader with marsh tracks.

In order to speed up the natural compaction process, presoaking the placed soil may be performed. Significant settlement can occur after the first presoak, and additional settlement may occur subsequent to the initial wetting. If time and construction scheduling permits, it is preferable to allow natural settlement to occur with the help of rain events to presoak the soil medium.

MAINTENANCE

Begin maintenance immediately after installation.

Protect Bioretention Soil from sedimentation from adjacent soils with silt fence and check for signs of erosion after rainstorms. Repair gullies or other signs of erosion.

Replenish mulch when needed.

Remove accumulated sediment; replace top inch of soil when clogged.

Check overflow pipe and remedy clogging as needed.

CLEANUP AND PROTECTION

During bioretention work, keep pavements clean and work areas in an orderly condition.

METHOD OF MEASUREMENT

The length of Bioretention swales will be measured by the Landscape Archited to the nearest foot along the center line of the Bioretention swale

BASIS OF PAYMENT

For the number of linear feet of Bioretention swale of the size specified, furnished, and installed, the contractor will be paid the contract unit price per linear foot.

This payment shall be full compensation for excavating, furnishing material, labor, tools necessary for the placement of the Bioretention swale bottom filter media zone, ripping, preparing the swale side slopes, removal of excess excavated material, furnishing and placing the specified soil mix, perforated HDPE subdrains, non-perforated subdrains, subdrain end caps, elbows, tees and other necessary subdrain connections as shown in the contract documents.

HIGH DENSITY POLYETHYLENE (HDPE) PIPE

GENERAL

RELATED DOCUMENTS

Drawings and general provisions of Contract, including General and Supplementary Conditions and Division 1 Specification Sections, apply to this Section.

SUMMARY

Work shall include all labor, materials, and equipment necessary to completely furnish and install the Subdrainage System as indicated on the plans and as herein specified.

This section includes the following:

- Pipe
- Fittings and accessories

Related Sections: The following Sections contain requirements that relate to this Section:

- See Bioretention Soil for bedding requirements

QUALITY ASSURANCE

Obtain Architect's acceptance of installed and tested subdrainage system prior to installing bioretention fill materials.

SUBMITTALS

Submit Manufacturer's product data for each type of drainage pipe required. Show types and sizes of fittings and accessories proposed for the work.

PROJECT CONDITIONS

Coordinate installation of the subdrainage system with excavating work

PRODUCTS

MATERIALS

Subdrainage piping: Provide types and sizes indicated on plans. Provide matching reducers, adaptors, couplings, fittings, and accessory components to ensure continuity of the subdrainage system.

- High Density Polyethylene (HDPE) Dual Wall Pipe and Fittings shall be manufacture in accordance with requirements of ASTM F405.
    - Perforated HDPE pipe and must meet AASHTO Specifications M294 and M252 requirements.
        - Provide Class II Perforations for this project.

EXECUTION

INSPECTION

Examine substrates and installation conditions. Do not start subdrainage work until unsatisfactory conditions are corrected.

INSTALLATION

Provide a compacted earth base. Hand trim excavations to required elevation. Place and compact earth fill as required to fill low areas and provide a positive drainage flow.

Install minimum 4" layer of drainage fill over compacted earth base for bedding drainage pipe (ref Bioretention detail section).

Lay drainage pipe with perforations down, joints closed, and firmly bedded in drainage fill material. Provide full bearing for each pipe section. Provide continuous slope in the direction of flow.

- Provide collars and couplings for all in-line joints and ell, elbow, or bend sections for all corners and changes in direction.
- Provide recesses to receive bell and spigot ends.
- Provide unperforated run out pipe. Extend drainage system to out fall indicated and make connection.

Obtain required inspections and perform testing before backfilling. Remove obstructions, replace damaged components, and retest system as required. Provide a satisfactory free flowing subdrainage system.

Place drainage fill over drain piping after satisfactory testing and acceptance. Exercise care to avoid damage or displacement of installed piping.

Install Bioretention fill over compacted drainage fill (rock and sand filter as shown in detail)

CLEANING

Upon completion of subdrainage work, remove tools and equipment. Provide site clear, clean, free of debris, and suitable for site work operations.

BASIS OF PAYMENT

Refer to Bioretention Construction

ADDITIONAL SUPPORTING INFORMATION

The following supporting data shall be considered a part of these project Special Provisions and are attached to the contract documents.

- West Haymarket Pedestrian Bridge and Embankment Geotechnical Report

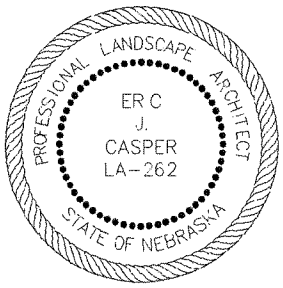

WH 12-70 Introduce: 12-18-12

RESOLUTION NO. WH- _____

BE IT RESOLVED by the Board of Representatives of the West Haymarket Joint Public Agency:

That the Capital Budget for the West Haymarket Joint Public Agency is hereby amended to incorporate the attached Program Budget Summary changes.

Adopted this _____ day of _____, 2012.

Introduced by:

_____

Approved as to Form & Legality:

_____
Legal Counsel for
West Haymarket Joint Public Agency

West Haymarket Joint Public Agency
Board of Representatives

_____
Chris Beutler, Chair

_____
Tim Clare

_____
Eugene Carroll

	Description	Approved Job Cost Report Budget 02/28/12	Proposed Changes 12/18/2012	Revised Project Budget
	TOTAL PROGRAM SUMMARY			
	Infrastructure			
70090	General Coordination	$6,674,522.13	$0.00	$6,674,522.13
70092	Parking	$28,378,323.29	$1,046,203.33	$29,424,526.62
70093	Roads	$21,320,013.99	$2,962,187.65	$24,282,201.64
70094	Pedestrian Ways	$1,000,000.00	$424,060.00	$1,424,060.00
70095	Utilities	$2,143,785.32	-$144,845.05	$1,998,940.27
70096	Environmental	$6,003,600.00	$809,449.30	$6,813,049.30
70097	Dirt Moving	$9,036,009.95	-$2,972,561.36	$6,063,448.59
70098	TIF Improvements	$0.00	$0.00	$0.00
70100	Other Costs (ITS / Civic Art)	$3,326,826.84	$0.00	$3,326,826.84
	Total Infrastructure	$77,883,081.52	$2,124,493.87	$80,007,575.39
	Arena			
70091	Arena / Garage Construction	$183,950,266.00	$1,500,000.00	$185,450,266.00
	Total Arena / Arena Garage	$183,950,266.00	$1,500,000.00	$185,450,266.00
	Site Purchase / Bond Related Costs			
70099	Site Purchase	$62,451,005.01	$34,649.92	$62,485,654.93
70105	Bond Related Costs	$5,160,000.00	$0.00	$5,160,000.00
	Total Site Purchase Bond Related Costs	$67,611,005.01	$34,649.92	$67,645,654.93
	Total Project Costs	**$329,444,352.53**	**$3,659,143.79**	**$333,103,496.32**
	Contingency			
	1% Inflation (delta over overage)	$0.00	$0.00	$0.00
	Contingency	$10,304,990.47	-$945,564.79	$9,359,425.68
	Total Contingencies	$10,304,990.47	-$945,564.79	$9,359,425.68
	Total Project Budget with Contingencies	**$339,749,343.00**	**$2,713,579.00**	**$342,462,922.00**
	Other Funding Sources			
	City Funded Betterments	$403,579.00	($403,579.00)	$0.00
	Convention and Visitors Bureau (moved $1.5M to Arena)	$3,500,000.00	($1,500,000.00)	$2,000,000.00
	Brownfield Reimbursement (Moved to Environmental)	$810,000.00	($810,000.00)	$0.00
	Land Sale Revenue - TDP Block	$0.00	$391,399.14	$391,399.14
	Streetlight Refunding	$0.00	$307,428.28	$307,428.28
	Naming Rights / Sponsorship Funding	$0.00	$500,000.00	$500,000.00
	RTSD Funding	$0.00	$203,697.52	$203,697.52
	TIF Repayment for Sanitary Sewer	$0.00	$52,793.31	$52,793.31
		$4,713,579.00	($1,258,260.75)	$3,455,318.25
	Total Project Budget plus Other Funding Sources	**$344,462,922.00**	**$1,455,318.25**	**$345,918,240.25**
				$345,918,240.25

WH 12-71 Introduce: 12-18-12

RESOLUTION NO. WH- _____

BE IT RESOLVED by the Board of Representatives of the West Haymarket Joint Public Agency:

That the Change Order No. 3 to the Final Guaranteed Maximum Price Amendment to the Amended and Restated Construction Manager at Risk Contract with M.A. Mortenson to add buildings core switches and VoiP System, IPTV System and TV displays and complete installation of the exterior naming rights signage for an additional contract amount of $2,181,973 and to establish $159,111,219 as the revised amount the contract sum (GMP) shall not exceed, is hereby approved and the Chairperson of the West Haymarket Joint Public Agency Board of Representatives is hereby authorized to execute said Change Order No. 3 on behalf of the West Haymarket Joint Public Agency.

The City Clerk is directed to return one fully executed copy of Change Order No. 3 and a copy of this Resolution to Rick Peo, Chief Assistant City Attorney, for transmittal to M.A. Mortenson Company.

Adopted this _____ day of _____, 2012.

Introduced by:

_____

Approved as to Form & Legality:

_____
Legal Counsel for
West Haymarket Joint Public Agency

West Haymarket Joint Public Agency
Board of Representatives

_____
Chris Beutler, Chair

_____
Tim Clare

_____
Eugene Carroll

December 5, 2012

WHJPA-Pinnacle Bank Arena

CHANGE ORDER
No. 003

Title: Change Order #03
Project: WHJPA-Pinnacle Bank Arena
To: **M. A. Mortenson Company**
National Projects Group Operations
440 NORTH 8th STREET
SUITE 110
Lincoln NE 68508

Date: 05-DEC-12
Project No: 10150002
Contract No:
Phone:

DESCRIPTION OF CHANGE

This change order is for all costs associated with the building core switches, the IPTV System, and the TV displays. The naming rights signage is included as an allowance and will be adjusted accordingly upon completion of the exterior naming rights signage.

COLLECTED CHANGES

PCO	Issue	Description	Amount
120.0	00860	A - Building Core Switches and VoIP System	511,345.00
121.0	00861	A - IPTV and TVs	1,170,628.00
122.0	00862	A - Naming Rights Exterior Signage Allowance	500,000.00

Total of collected changes	$	2,181,973.00
The original Contract Sum was	$	156,270,167.00
Net change by previously authorized Change Orders	$	659,079.00
The Contract Sum prior to this Change Order was	$	156,929,246.00
The Contract Sum will be modified in the amount of	$	2,181,973.00
The new Contract Sum including this Change Order will be	$	159,111,219.00

ACCEPTED:
M A Mortenson Company

BY (Signature)

John A. Flinton
(Printed Name)

12/5/12
DATE

ACCEPTED:
MAYOR BEUTLER OR JOINT PUBLIC AGENCY

BY (Signature)

(Printed Name)

DATE

ACCEPTED:
PC Sports, Inc.

Paula Yancey
BY (Signature)

Paula Yancey
(Printed Name)

12/5/12
DATE

ACCEPTED:
DLR Group, Inc.

BY (Signature)

(Printed Name)

12-6-12
DATE

WHJPA-Lincoln West Haymarket Arena

Proposed Change Order #120
December 5, 2012

Mortenson construction

Summary of Revisions

This PCO is for the buildings core switches and VoiP System.

Summary Revisions	Cost
Total Direct Cost	470,535.00
Contingencies Applied	23,527.00
Net Subtotal	**$494,062.00**
BOND .645%	3,186.70
Subtotal Proposed Change Order	**$497,248.70**
INSURANCE .868%	4,315.79
Subtotal Proposed Change Order	**$501,564.49**
FEE 1.95%	9,780.51
Subtotal Proposed Change Order	**$511,345.00**
Proposed Change Order Amount	**$511,345.00**

Submitted	Reviewed	Accepted	Accepted
M. A. Mortenson Company	**DLR Group, Inc.**	**MAYOR BEUTLER OR JOINT PUBLIC AGENCY**	**PC Sports**
By: John Hinshaw	By: Jim Jaros	By:	By: Paula Yancey
Date: 12/5/12	Date:	Date:	Date:

This change estimate includes items clearly indicated on the referenced documentation only, and as clarified herein. Changes to Contract Documents not specifically identified as revisions are not included in this proposal, unless specifically noted. Mortenson reserves the right to a future contract sum and schedule adjustment should changes be discovered which are not identified as such in the referenced documents and to submit for additional compensation related to the impact of this change on unchanged work or the effect of this change in combination with other changes.

WHJPA-Lincoln West Haymarket Arena

Proposed Change Order #120
December 5, 2012

Mortenson construction

Detailed Cost Summary

Direct Cost

Description	Qty.	Unit	Hours	Rate	General Conditions	Labor	Material	Equipment	Direct Contracts
Building Core Switches	1.00			470,535.00					470,535.00
Subtotals Direct Cost									**470,535.00**

Subtotal Direct Cost **$470,535.00**

Contingencies

Description	Qty.	Unit	Hours	Rate	Cost
5% Allowance Contingency	1.0			23,527.00	23,527.00

Subtotal Contingencies **$23,527.00**

Schedule of Values Cost Summary

Bill Code	Description	Change Amount
160	ELECTRICAL	470,535.00
990	CCA DOCUMENT 8 THRU 12	23,527.00
991	CM PERFORMANCE & PAYMENT BOND	3,186.70
998	INSURANCE	4,315.79
999	FEE 1.95%	9,780.51

Proposed Change Order Amount **$511,345.00**

WHJPA-Lincoln West Haymarket Arena

Proposed Change Order #121
December 5, 2012

Mortenson construction

Summary of Revisions

This PCO is for the IPTV Sytem and the TV Displays.

The savings for switching from SMATV to IPTV is an electrical deduct value of $9,718. This cost is applied to the allowance line item in the GMP and is not included in this PCO.

Summary Revisions	**Cost**
Total Direct Cost	1,070,760.00
Contingencies Applied	60,301.00
Net Subtotal	**$1,131,061.00**
BOND .645%	7,295.34
Subtotal Proposed Change Order	**$1,138,356.34**
INSURANCE .868%	9,881.02
Subtotal Proposed Change Order	**$1,148,237.36**
FEE 1.95%	22,390.64
Subtotal Proposed Change Order	**$1,170,628.00**
Proposed Change Order Amount	**$1,170,628.00**

Submitted	Reviewed	Accepted	Accepted
M. A. Mortenson Company	**DLR Group, Inc.**	**MAYOR BEUTLER OR JOINT PUBLIC AGENCY**	**PC Sports**
By: John Hinshaw	By: Jim Jaros	By:	By: Paula Yancey
Date: 12/5/12	Date:	Date:	Date:

This change estimate includes items clearly indicated on the referenced documentation only, and as clarified herein. Changes to Contract Documents not specifically identified as revisions are not included in this proposal, unless specifically noted. Mortenson reserves the right to a future contract sum and schedule adjustment should changes be discovered which are not identified as such in the referenced documents and to submit for additional compensation related to the impact of this change on unchanged work or the effect of this change in combination with other changes.

WHJPA-Lincoln West Haymarket Arena

Proposed Change Order #121
December 5, 2012

Mortenson construction

Detailed Cost Summary

Direct Cost

Description	Qty.	Unit	Hours	Rate	General Conditions	Labor	Material	Equipment	Direct Contracts
Projection Screens	1.00			(135,267.00)					(135,267.00)
IPTV System	1.00			793,408.00					793,408.00
TV Display and Install	1.00			412,619.00					412,619.00
Subtotals Direct Cost									**1,070,760.00**

Subtotal Direct Cost **$1,070,760.00**

Contingencies

Description	Qty.	Unit	Hours	Rate	Cost
5% Allowance Contingency	1.0			60,301.00	60,301.00

Subtotal Contingencies **$60,301.00**

Schedule of Values Cost Summary

Bill Code	Description	Change Amount
111	PROJECTION SCREENS	(135,267.00)
160	ELECTRICAL	1,206,027.00
990	CCA DOCUMENT 8 THRU 12	60,301.00
991	CM PERFORMANCE & PAYMENT BOND	7,295.34
998	INSURANCE	9,881.02
999	FEE 1.95%	22,390.64

Proposed Change Order Amount **$1,170,628.00**

WHJPA-Lincoln West Haymarket Arena

Proposed Change Order #122
December 5, 2012

Mortenson construction

Summary of Revisions

This PCO is an allowance for the complete installation of the exterior naming rights signage including all support structure costs, exterior enclosure revisions, and signage.

Summary Revisions	**Cost**
Total Direct Cost	483,100.00
Net Subtotal	**$483,100.00**
BOND .645%	3,116.00
Subtotal Proposed Change Order	**$486,216.00**
INSURANCE .868%	4,220.49
Subtotal Proposed Change Order	**$490,436.49**
FEE 1.95%	9,563.51
Subtotal Proposed Change Order	**$500,000.00**
Proposed Change Order Amount	**$500,000.00**

Submitted	Reviewed	Accepted	Accepted
M. A. Mortenson Company	**DLR Group, Inc.**	**MAYOR BEUTLER OR JOINT PUBLIC AGENCY**	**PC Sports**
By: John Hinshaw	By: Jim Jaros	By:	By: Paula Yancey
Date: 12/5/12	Date:	Date:	Date:

This change estimate includes items clearly indicated on the referenced documentation only, and as clarified herein. Changes to Contract Documents not specifically identified as revisions are not included in this proposal, unless specifically noted. Mortenson reserves the right to a future contract sum and schedule adjustment should changes be discovered which are not identified as such in the referenced documents and to submit for additional compensation related to the impact of this change on unchanged work or the effect of this change in combination with other changes.

Issue Number:	00862	**PCO Date:**	12/05/2012	**Mortenson Project #:**	10150002
Issue Description:	A - Naming Rights Exterior Signage	**PCO Number:**	122		

WHJPA-Lincoln West Haymarket Arena

Proposed Change Order #122
December 5, 2012

Mortenson construction

Detailed Cost Summary

Direct Cost

Description	Qty.	Unit	Hours	Rate	General Conditions	Labor	Material	Equipment	Direct Contracts
Naming Rights Exterior Signage Allowance	1.00			483,100.00					483,100.00
Subtotals Direct Cost									**483,100.00**

Subtotal Direct Cost **$483,100.00**

Schedule of Values Cost Summary

Bill Code	Description	Change Amount
104	IDENTIFICATION DEVICES	483,100.00
991	CM PERFORMANCE & PAYMENT BOND	3,116.00
998	INSURANCE	4,220.49
999	FEE 1.95%	9,563.51

Proposed Change Order Amount **$500,000.00**

Mortenson Contract Reconciliation Review
12/18/12

		Items		Revised GMP	Funding Source
Mortenson GMP:					
Arena and Garage	$	149,999,536.00			Arena / Garage Budget
			$	**149,999,536**	
Amendment No. 1:					
Pedestrian Ramp	$	3,500,000.00			Infrastructure Budget
R Street Improvements	$	135,613.00			Infrastructure Budget
CCA Allowance / Owner Upgrades	$	1,063,308.00			Arena Contingency
Pad Ready Site Items	$	1,571,709.00			Infrastructure Budget
			$	**156,270,166**	
Change Order No. 1:					
Enhanced Curtaining System	$	532,825.00			CVB $3.5 Million Contribution
			$	**156,802,991**	
Change Order No. 2:					
Electric Hand Dryers	$	126,255.00			Arena Contingency
			$	**156,929,246**	
Change Order No. 3:					
Building Core Switches	$	511,345.00			Arena FF&E budget
IPTV and Additional TVs	$	1,170,628.00			CVB $3.5M Contribution
Naming Rights Exterior Signage Allowance	$	500,000.00			Pinnacle Bank 1st and 2nd Year Contribution
			$	**159,111,219**	