PROJ: 7000228 OLD AS OF 070810.cfg
PEN: ...\tables\Pen\GW_PENTABLE.TBL
USER: steccaw
DATE: 9/27/2011
DGN: ...\STANDARD\Current\lsp320s1.dgn

CITY OF LINCOLN NEBRASKA

PROJECT NO.	SHEET NO.
LSP 320	1
Date: 5/4/2011	Drawn: CAW/CEA
	Checked:
	Approved:

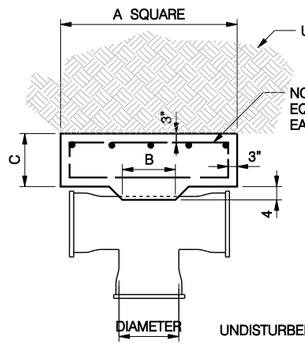

REINFORCED CONCRETE TEE BLOCK

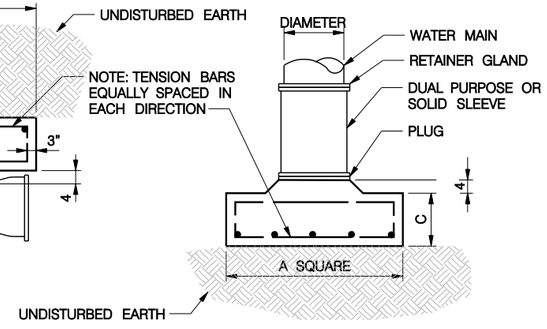

REINFORCED CONCRETE PLUG BLOCK

REINFORCED CONCRETE TEE BLOCK AND PLUG BLOCK							
DIAMETER	A	B	C	BAR SIZE	NUMBER OF BARS EACH WAY	STEEL (LBS.)	CONCRETE CUBIC YARDS
6	1'–9"	0'–8"	0'–8"	–	–	–	0.1
8	2'–3"	0'–9"	0'–9"	–	–	–	0.2
12	3'–4"	1'–0"	1'–0"	NO 4	6	22.7	0.4
16	4'–6"	1'–3"	1'–3"	NO 4	8	42.8	1.0
20	5'–8"	1'–6"	1'–6"	NO 5	8	86.8	1.9
24	6'–9"	1'–9"	1'–9"	NO 5	11	143.5	3.1
30	8'–6"	2'–6"	2'–0"	NO 5	16	267.0	5.5
36	10'–0"	3'–0"	2'–6"	NO 6	15	428.0	9.5
48	13'–6"	4'–0"	3'–0"	NO 7	20	1063.0	21.2

REINFORCED CONCRETE THRUST BLOCK

DIAMETER	Ø =11 1/4°							DIAMETER	Ø =22 1/2°						
	A	B	C	BAR SIZE	NUMBER OF BARS EACH WAY	STEEL (LBS.)	CONCRETE CUBIC YARDS		A	B	C	BAR SIZE	NUMBER OF BARS EACH WAY	STEEL (LBS.)	CONCRETE CUBIC YARDS
6	1'–3"	0'–9"	1'–0"	–	–	–	0.1	6	1'–6"	0'–9"	1'–0"	–	–	–	0.1
8	1'–6"	1'–0"	1'–0"	–	–	–	0.1	8	1'–6"	1'–0"	1'–0"	–	–	–	0.1
12	1'–6"	1'–0"	1'–0"	NO 4	3	4.0	0.1	12	2'–3"	1'–0"	1'–0"	NO 4	3	7.0	0.2
16	2'–3"	1'–0"	1'–0"	NO 4	3	7.0	0.2	16	3'–0"	1'–0"	1'–0"	NO 4	5	16.7	0.4
20	2'–9"	1'–3"	1'–0"	NO 4	4	12.0	0.4	20	3'–9"	1'–3"	1'–0"	NO 4	7	30.4	0.6
24	3'–3"	1'–6"	1'–0"	NO 4	6	22.0	0.5	24	4'–6"	1'–6"	1'–3"	NO 5	6	50.1	1.1
30	4'–0"	2'–0"	1'–3"	NO 4	7	32.7	0.9	30	5'–6"	2'–0"	1'–6"	NO 5	9	93.9	1.9
36	4'–9"	2'–6"	1'–3"	NO 5	7	62.0	1.3	36	6'–9"	2'–6"	1'–9"	NO 5	12	169.5	3.3
48	6'–6"	3'–3"	1'–6"	NO 5	13	162.7	1.9	48	9'–0"	3'–3"	2'–0"	NO 10	6	438.9	6.7
DIAMETER	Ø =45°							DIAMETER	Ø =90°						
	A	B	C	BAR SIZE	NUMBER OF BARS EACH WAY	STEEL (LBS.)	CONCRETE CUBIC YARDS		A	B	C	BAR SIZE	NUMBER OF BARS EACH WAY	STEEL (LBS.)	CONCRETE CUBIC YARDS
6	1'–9"	1'–0"	1'–0"	–	–	–	0.2	6	2'–3"	1'–0"	1'–0"	–	–	–	0.2
8	2'–3'	1'–0"	1'–0"	–	–	–	0.2	8	3'–0"	1'–0"	1'–0"	–	–	–	0.4
12	3'–3"	1'–0"	1'–0"	NO 4	6	22.0	0.4	12	4'–3'	1'–0"	1'–3"	NO 5	6	47.0	0.9
16	4'–3"	1'–0"	1'–3"	NO 5	6	46.9	0.9	16	5'–9"	1'–0"	1'–6"	NO 5	10	109.5	2.0
20	5'–3"	1'–3"	1'–6'	NO 5	8	79.3	1.6	20	7'–0"	1'–3"	1'–9"	NO 5	15	203.4	3.3
24	6'–3"	1'–6"	1'–6'	NO 5	11	131.9	2.3	24	8'–6'	1'–6"	2'–0"	NO 6	15	360.5	5.6
30	7'–9"	2'–0"	1'–9'	NO 7	9	266.7	4.1	30	10'–6"	2'–0"	2'–3"	NO 9	10	680.0	9.5
36	9'–3"	2'–6"	2'–0"	NO 7	14	500.8	6.8	36	12'–6"	2'–6"	2'–9"	NO 10	11	1136.0	16.3
48	12'–3"	3'–3"	2'–6"	NO 10	11	1112.3	14.8	48	16'–9'	3'–3"	3'–6"	NO 11	16	2763.0	37.2

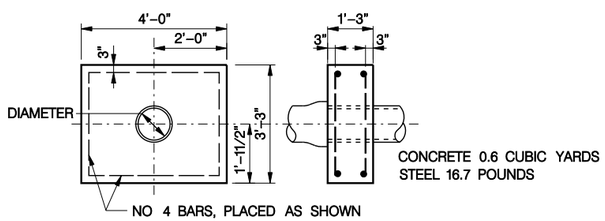

CONCRETE 0.6 CUBIC YARDS
STEEL 16.7 POUNDS

12" OR SMALLER WATER MAINS

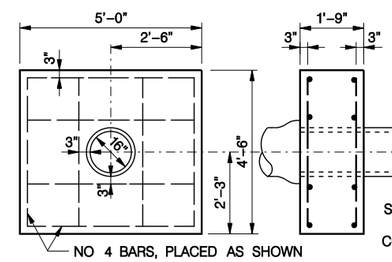

STEEL 45.4 POUNDS
CONCRETE 1.4 CUBIC YARDS

16" WATER MAIN

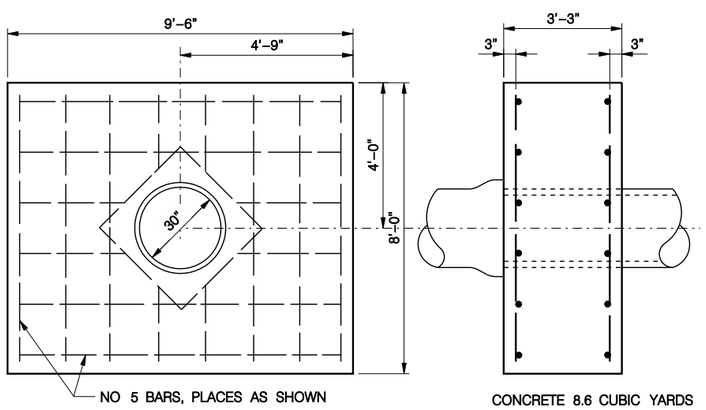

CONCRETE 8.6 CUBIC YARDS
STEEL 241.3 POUNDS

30" WATER MAINS

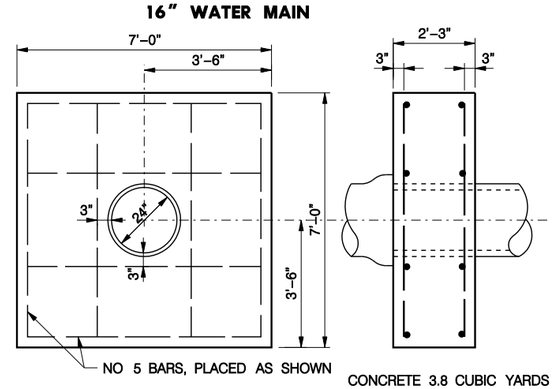

CONCRETE 3.8 CUBIC YARDS
STEEL 108.5 LBS.

24" WATER MAINS

REINFORCED CONCRETE COLLARS

NOTE: R.C. THRUST COLLARS TO BE BUILT ADJACENT TO VALVES, AT THE SPIGOT SIDE OF LAST PIPE CONNECTION OR ADJACENT TO THE SMALLER DIAMETER SIDE OF M.J. REDUCERS.

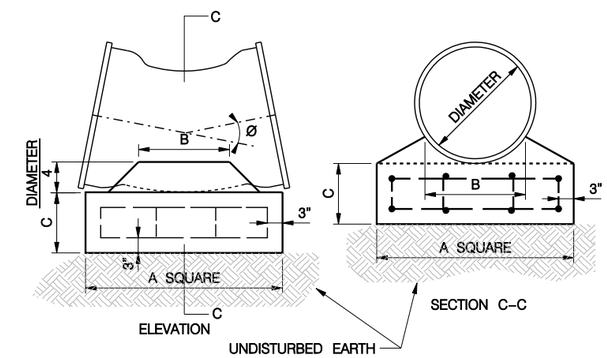

REINFORCED CONCRETE THRUST BLOCKS

GENERAL NOTES:

ALL REINFORCING STEEL SHALL BE DEFORMED BARS CONFORMING TO A. S. T. M. SERIAL DESIGNATION A–305–507 AND SHALL SATISFY THE BEND TEST REQUIREMENTS FOR STRUCTURAL GRADE STEEL IN ACCORDANCE WITH THE REQUIREMENTS.

ALL CONCRETE SHALL BE L3500.

ALL CONCRETE COLLARS SHALL BE CONSTRUCTED SUCH THAT THEY ARE ANCHORED AGAINST UNDISTURBED SOIL.

MINIMUM DEPTH OF EMBEDMENT FOR REINFORCING STEEL TO BE AS NOTED.

ALL REINFORCING STEEL SHALL BE EPOXY COATED.

POURED IN PLACE THRUST BLOCKING SHALL BE PROPERLY FORMED TO THE STATED DIMENSIONS AND SHALL NOT ENCASE THE M.J. BOLTS AND FASTENERS.

THRUST COLLARS FOR REDUCERS SHALL BE INSTALLED ON THE SMALL PIPE SIDE OF A REDUCER, HOWEVER THE SIZE SHALL BE BASED OFF OF THE LARGER DIAMETER PIPE.

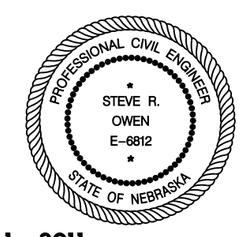

EFFECTIVE JULY 1, 2011

R.C. COLLARS, THRUST BLOCKS, ANCHORAGES, GRAVITY BLOCKS, TEE BLOCKS AND PLUG BLOCKS
L.S.P. 320

This document was originally issued and sealed by Steve R. Owen, E-6812, on 6-6-11. This media should not be considered a certified document.

PROJ: 7000228 OLD AS OF 070810.cfg
PEN: ...\tables\Pen\GW_PENTABLE.TBL
USER: sdecaw
DATE: 9/27/2011
DGN: ...\STANDARD\Current\lsp320to2.dgn

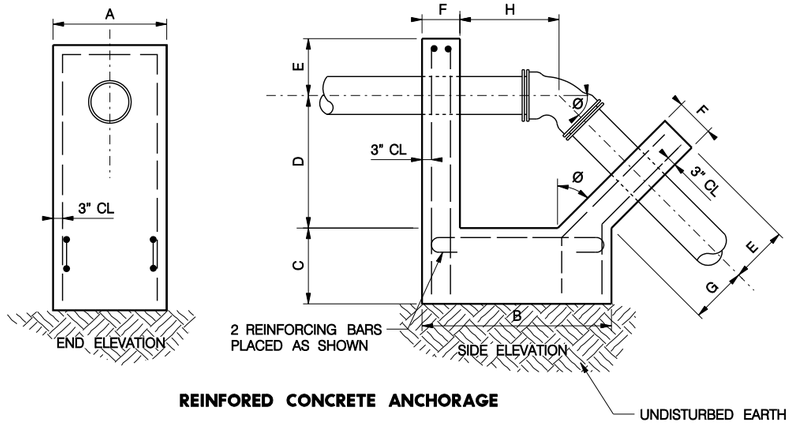

REINFORED CONCRETE ANCHORAGE

DIA.	REINFORED CONCRETE ANCHORAGE																				
	Ø =45°											Ø =22 1/2°									
	A	B	C	D	E	F	G	H	CONC. CU.YDS.	BAR SIZE REINF.	(LBS.) STEEL	A	B	C	D	E	F	G	H	CONC. CU.YDS.	BAR SIZE REINF.	(LBS.) STEEL
6&8	2'–0"	4'–6"	1'–6"	2'–6"	1'–0"	1'–0"	0'–8"	1'–11"	0.94	#4	34	2'–0"	4'–6'	0'–9"	1'–6"	1'–0"	1'–0"	0'–8"	1'–7"	0.54	#4	28
10	2'–6"	5'–0"	1'–6"	3'–0"	1'–3"	1'–0"	1'–0"	2'–4"	1.31	#4	42	2'–6"	5'–0"	0'–9"	1'–9"	1'–3"	1'–0"	0'–9"	1'–8"	0.75	#4	32
12	3'–0"	5'–0"	2'–0"	3'–6"	1'–6"	1'–0"	1'–6"	3'–1"	1.98	#4	48	3'–0"	5'–0"	0'–9"	2'–0"	1'–6"	1'–0"	1'–0"	1'–9"	1.05	#4	36
14	3'–0"	6'–0"	2'–6"	4'–0"	1'–6"	1'–0"	1'–6"	3'–1"	2.58	#5	83	3'–0"	5'–6"	1'–3"	2'–3"	1'–6"	1'–0"	1'–3"	2'–3"	1.40	#4	36
16	3'–6"	6'–6"	2'–9"	4'–6"	1'–6"	1'–0"	1'–9"	3'–5"	3.46	#5	92	3'–0"	6'–6"	2'–0"	2'–9"	1'–6"	1'–0"	1'–6"	2'–9"	1.79	#4	47
18	3'–6"	7'–0"	3'–6"	4'–6"	1'–6"	1'–0"	1'–8"	3'–10"	4.29	#5	96	3'–6"	7'–0"	1'–9"	3'–0"	1'–6"	1'–0"	1'–8"	3'–1"	2.44	#4	50
20	4'–0"	7'–6"	3'–6"	5'–0"	1'–6"	1'–0"	2'–0"	4'–4"	5.25	#6	146	4'–0"	7'–0"	2'–0"	3'–0"	1'–6"	1'–0"	1'–8"	3'–1"	3.04	#5	80
24	5'–0"	10'–0'	3'–0"	7'–0"	2'–0"	1'–0"	2'–10"	6'–0"	7.96	#7	250	4'–6"	9'–0"	1'–9"	4'–0"	2'–0"	1'–0"	2'–3"	4'–2"	4.11	#6	143

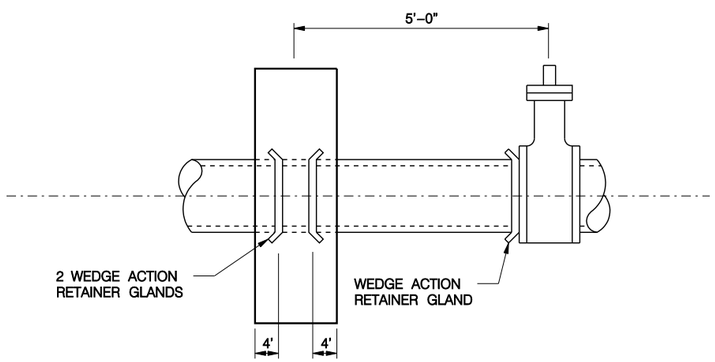

THRUST COLLAR FOR PVC PIPE

WHENEVER PVC PIPE IS USED FOR WATER MAIN MATERIAL, A THRUST COLLAR SHALL BE INSTALLED 5' FROM EACH LINE VALVE OR REDUCER. TWO WEDGE ACTION RETAINER GLANDS SHALL BE EMBEDDED IN THE THRUST COLLAR, WITH THE GRIPPING WEDGES FACING OPPOSITE DIRECTIONS, TO PROVIDE THRUST RESTRAINT FROM EITHER DIRECTION. A SINGLE WEDGE ACTION RETAINER GLAND SHALL BE INSTALLED ON THE M. J. JOINT ON THE SIDE OF THE VALVE OR REDUCER NEAREST THE THRUST COLLAR. SEE LSP 320 FOR CONCRETE AND REINFORCING STEEL DETAILS.

DOUBLE WRAP ALL JOINTS WITH POLYWRAP PRIOR TO PLACING CONCRETE BACKING BLOCKS.

COVER ALL STRAPS AND BEAMS OUTSIDE OF CONCRETE W/ POLYWRAP OR TAPE.

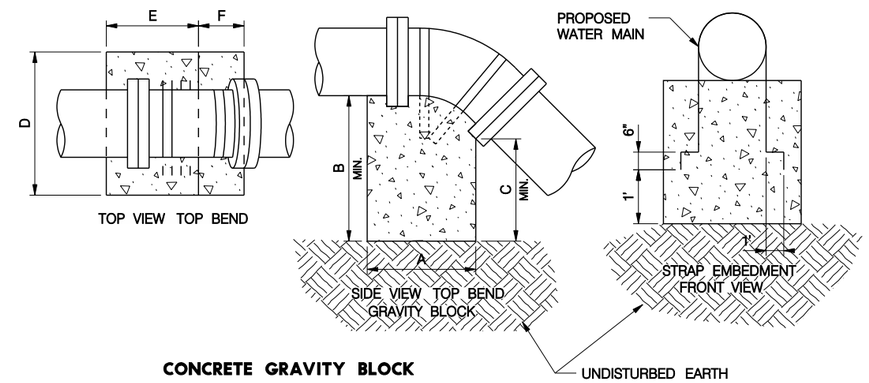

CONCRETE GRAVITY BLOCK

CONCRETE GRAVITY BLOCK										
	DIMENSION							STRAPS		
BEND	A	B MIN.	C MIN.	D	E	F	CONCRETE CY	NO.	SIZE	EMBED.
16" x 45°	6'–0"	6'–0"	3'–0"	7'–0"	3'–0"	3'–0"	9.33	2	2" x 3/8"	30"
12" x 45°	6'–0"	5'–0"	2'–0"	5'–0"	3'–0"	3'–0"	4.72	2	2" x 1/4"	24"
8" x 45°	4'–0"	4'–0"	2'–0"	4'–6"	2'–0"	2'–0"	2.33	2	1" x 1/4"	18"
6" x 45°	3'–6"	3'–0"	1'–6"	3'–6"	2'–0"	1'–6"	1.43	2	1" x 1/4"	18"
16" x 22.5°	5'–6"	5'–6"	4'–6"	4'–6"	3'–0"	2'–6"	5.13	2	2" x 3/8"	30"
12" x 22.5°	4'–6"	5'–0"	4'–2"	3'–6"	2'–6"	2'–0"	2.88	2	2" x 1/4"	24"
8" x 22.5°	3'–0"	4'–0"	3'–6"	3'–0"	1'–6"	1'–6"	1.33	2	1" x 1/4"	18"
6" x 22.5°	2'–0"	3'–3"	3'–0"	3'–0"	1'–3"	0'–9"	0.72	2	1" x 1/4"	18"
16" x 11.25°	4'–0"	4'–0"	3'–6"	4'–0"	2'–0"	2'–0"	2.37	2	2" x 3/8"	30"
12" x 11.25°	3'–0"	3'–0"	2'–9"	3'–6"	2'–0"	1'–0"	1.17	2	2" x 1/4"	24"
8" x 11.25°	3'–0"	2'–0"	1'–9"	3'–0"	2'–0"	1'–0"	0.56	2	1" x 1/4"	18"
6" x 11.25°	2'–0"	2'–0"	1'–9"	2'–8"	1'–0"	1'–0"	0.40	2	1" x 1/4"	18"

GENERAL NOTES:

GRAVITY BLOCK STRAPS OF THE SIZE AND TYPE SPECIFIED SHALL BE STATE STEEL TYPE M1020, OR EQUIVALENT, LOW CARBON, LOW MANGANESE, GENERAL PURPOSE, MERCHANT QUALITY STAINLESS STEEL THAT IS SUITABLE FOR FORMING AND WELDING.

ALL STRAP MATERIAL NOT EMBEDDED IN CONCRETE SHALL BE COVERED WITH POLYWRAP OR TAPE PRIOR TO BACKFILLING.

ALL CONCRETE SHALL BE L3500.

ALL CONCRETE COLLARS SHALL BE CONSTRUCTED SUCH THAT THEY ARE ANCHORED AGAINST UNDISTURBED SOIL.

PROFESSIONAL CIVIL ENGINEER
STEVE R.
OWEN
E–6812
STATE OF NEBRASKA

EFFECTIVE JULY 1, 2011

R.C. COLLARS, THRUST BLOCKS, ANCHORAGES, GRAVITY BLOCKS, TEE BLOCKS AND PLUG BLOCKS

L.S.P. 320

This document was originally issued and sealed by Steve R. Owen, E-6812, on 6-6-11. This media should not be considered a certified document.