AGENDA FOR THE
WEST HAYMARKET JOINT PUBLIC AGENCY (JPA)
TO BE HELD THURSDAY, APRIL 23, 2026 AT 2:30 P.M.
CITY-COUNTY BUILDING
COUNCIL CHAMBERS, 1ST FLOOR
555 S. 10TH STREET
LINCOLN, NE 68508

1. Introductions and Notice of Open Meetings Law Posted by Door

2. Public Comment and Time Limit Notification Announcement
Individuals from the audience will be given a total of 5 minutes to speak on specific items listed on today's agenda. Those testifying should identify themselves for the official record.

3. Approval of the minutes from the JPA meeting held February 26, 2026.
   - (Staff recommendation: Approval of the minutes as presented)

4. Approval of the Payment Register for January through February 2026 and review of the Expenditure Report as of February 28, 2026. (Joe Dondlinger)
   - Public Comment
   - (Staff recommendation: Approval of the Payment Register. No action is required on the Expenditure Report).

5. Bill No. WH 26-7
Resolution approving an Agreement for Engineering Services between the West Haymarket JPA and Olsson, Inc. for semi-annual inspections in accordance with the West Haymarket Redevelopment Site North and South O & M Plans, limited on-call soil sampling, and for a complete routine inspection of the Lincoln Pedestrian Bridge, for an amount not to exceed $94,800.00.
   - Public Comment
   - (Staff recommendation: Approval)

6. Bill No. WH 26-8
Resolution approving an Amendment to Memorandum of Understanding between the West Haymarket JPA, City of Lincoln, Lancaster County, City of Lincoln-Lancaster County Public Building Commission, and Voss Electric Company dba Voss Lighting for electrical equipment, bulbs, and ballasts for the Pinnacle Bank Arena, pursuant to MOU186, for an additional term through June 17, 2026, for an amount not to exceed $5,000.00.
   - Public Comment
   - (Staff recommendation: Approval)

7. Bill No. WH 26-9
Resolution approving a Memorandum of Understanding between the West Haymarket JPA, City of Lincoln, Lancaster County, City of Lincoln-Lancaster County Public Building Commission, and Voss Electric Company dba Voss Lighting for light bulbs, ballasts, and Retrofit Kits, pursuant to MOU241, for term of June 18, 2026 through June 17, 2026, for an amount not to exceed $20,000.00.
   - Public Comment
   - (Staff recommendation: Approval)

8. Bill No. WH 26-10
Resolution approving a Contract between the West Haymarket JPA and Arrowhead Construction, for a new mezzanine storage loft at the Pinnacle Bank Arena, pursuant to Bid No. 25-193, with costs not to exceed $42,000.00.
   - Public Comment
   - (Staff recommendation: Approval)

9. Bill No. WH 26-11
Resolution approving a Contract between the West Haymarket JPA and Cerris Systems North Central, Inc. fka MMC Mechanical Contractors dba Cerris Systems North Central, Inc., for the Amtrak Rooftop Unit 1 Replacement, pursuant to Bid No. 26-051, with costs not to exceed $76,377.00.
   - Public Comment
   - (Staff recommendation: Approval)

10. Bill No. WH 26-12
Resolution approving a Contract between the West Haymarket JPA and Midwest Storage Solutions, Inc. – Spacesaver, for outdoor furniture for the Pinnacle Bank Arena, pursuant to Bid No. 26-018, with costs not to exceed $73,644.75.
   - Public Comment
   - (Staff recommendation: Approval)

11. Bill No. WH 26-13
Resolution authorizing the Chairperson or Purchasing Agent to issue a Purchase Order between the West Haymarket JPA and TriMark, for gas fryer units, for the Pinnacle Bank Arena, with costs not to exceed $47,695.16.
   - Public Comment
   - (Staff recommendation: Approval)

12. Bill No. WH 26-14
Resolution authorizing the Chairperson or Purchasing Agent to issue a Purchase Order between the West Haymarket JPA and TriMark, for a cube-style ice maker, for the Pinnacle Bank Arena, with costs not to exceed $24,352.54.
   - Public Comment
   - (Staff recommendation: Approval)

13. Bill No. WH 26-15
Resolution approving an Agreement between the West Haymarket JPA and Prairie Mechanical Corporation, for HVAC and HVAC Controls Services, to replace seven hot water valves at the Pinnacle Bank Arena, with costs not to exceed $11,949.50, and approving an Agreement with WCR for materials, parts, and labor, with costs not to exceed $39,296.00, bringing the total project costs to $51,245.50.
   - Public Comment
   - (Staff recommendation: Approval)

14. Next Meeting Date: The next meeting date will be Thursday, August 27, 2026, at 2:30 p.m. in Council Chambers, First Floor of the County-City Building.

15. Motion to Adjourn

WEST HAYMARKET JOINT PUBLIC AGENCY (JPA)
Board Meeting
February 26, 2026

Meeting Began At: 2:33 P.M.

Meeting Ended At: 3:41 P.M.

Members Present: Leirion Gaylor Baird, Tim Clare, and Tom Beckius

Item 1 - Introductions and Notice of Open Meetings Law Posted by Door.
Gaylor Baird advised that this is a public meeting subject to the open meetings act posted at the back of the room.

Item 2 - Public Comment and Time Limit Notification.
Gaylor Baird advised members of the public are given five minutes for public comment on specific items listed on today's agenda and those testifying should identify themselves for the record.

Item 3 – Approval of the minutes from the JPA meeting held December 19, 2025.
Beckius moved approval of the minutes as presented. Clare seconded the motion. Motion carried 3-0.

Item 4 - Approval of the Payment Register for November through December 2025 and review of the Expenditure Report as of December 31, 2025.
Joe Dondlinger, Finance Director and JPA Treasurer, reviewed the November through December 2025 financial reports. He explained occupation taxes are in line with the projections for year 2045 of the original projections. Dondlinger responded to questions from Clare concerning the expenses and remaining balance clarifing the JPA is in a strong financial position. Dondlinger further reviewed the Pinnacle Bank Arena budget and stated it is up $2.2 million over this time last year. He explained Moody's upgraded the bonds to AAA which is the highest rating possible citing specifically the strong financial position of the City and the West Haymarket JPA. There being no further discussion or public comment, Beckius moved approval of the payment register. Clare seconded the motion. Motion carried 3-0.

Item 5 - Bill No. WH 26-1 Resolution accepting the financial audit and management letter and report from Forvis Mazars, LLP for the period ending August 31, 2025.
Dondlinger explained the audit report reflects a clean audit, with an unmodified opinion. He introduced Amy Shrek, Forvis Mazars, to review the report and answer any questions. Shrek reviewed the findings included in the different sections of the audit report and confirmed it was a clean audit, with an unmodified opinion. Beckius moved approval. Clare seconded the motion. Motion carried 3-0.

Item 6 - Bill No. WH 26-2 Resolution approving a Contract between the West Haymarket JPA and Advanced Digital Solutions, LLC, for new TVs at the Pinnacle Bank Arena, with costs not to exceed $115,300.00, pursuant to Bid No. 25-208.

Chris Connolly, City Law Department, explained this is phase three of the three phase project to replace TVs at Pinnacle Bank Arena. This is to purchase 40 plus TVs for the north and south lobby areas. Beckius asked for clarification that this is for both the TVs and the installation which Connolly confirmed. Beckius moved approval. Clare seconded the motion. Motion carried 3-0.

Item 7 - Bill No. WH 26-3 Resolution approving an agreement with Quadient Leasing USA, Inc., for the rental of a postage meter for use at the Pinnacle Bank Arena for a five year term, for a total amount not to exceed $5,045.40.

Connolly explained this is self explanatory and is for the same machine leased in the past. Beckius moved approval. Clare seconded the motion. Motion carried 3-0.

Item 8 - Bill No. WH 26-4 Resolution approving the Third Amended and Restated Facilities Agreement between the West Haymarket JPA and the City of Lincoln, Nebraska.

Connolly explained the Facilities Agreement is the main agreement between the City and the JPA identifying how the Pinnacle Bank Arena and other projects are operated and controlled. Over the years there have been opportunities to amend and restate the agreement mostly to include new projects that are added, but there is also some updating of language. The JPA has done this in the past. Once approved it will move on to the City Council for approval. Bond counsel is satisfied that this amendment will not impact the bonds or any of the JPA's obligations. Beckius moved approval. Clare seconded the motion. Motion carried 3-0.

Item 9 - Bill No. WH 26-5 Resolution approving a Security Agreement between the West Haymarket JPA and the City of Lincoln, for security at South Haymarket Park, for an amount not to exceed $9,000,000.00.

Rick Hoppe, Mayor's Chief of Staff, introduced this item and explained the vision to have a downtown community park and gathering space which will be known as South Haymarket Park. The park will be eight and a half acres, it will have the largest playground in the Lincoln Park system, the largest in ground skate park between Denver and Des Moines, there will be a common ground plaza with an art piece for people to gather, there will be an all season community building, restrooms, 100 trees, off street parking, connection to the Chris Beutler Trail, and open green space. He further explained the park is a $25 million investment, however, another $9 million is needed to finish the construction and endowment budget. Dondlinger was approached and asked if the West Haymarket JPA would be able to meet its fiduciary responsibilities and bond commitments if the JPA were to provide the $9 million. To ensure that a safe and welcoming space will be provided at the park, security through LPD off duty police officers and private security will be provided as set forth in the Security Agreement for up to two years with the effective date being when the park is declared open, costing $750,000 a year or $1.5 million for two years which will come out of the $9 million. Ambassadors will also be present in the park providing a safe and welcoming environment as set forth in the Agreement for Services to help people find things, make them feel welcome, and intervene when circumstances call for it. This agreement will be for up to two years with the effective date also being when the park is declared open and will cost $200,000 for the two years also coming out of the $9 million. $7.3 million will remain for the park to cover $6 million for construction and leaving the rest for the endowment. Connolly stated that both agreements are designed to have

the JPA be a funder of these activities but not be responsible for those activities. Once the money is paid to the City, the City is responsible for making sure the agreement with DLA is accomplished and the security arrangements are made with LPD and private security. Clare asked Dondlinger if the JPA is financially in a position to be able to do this and for confirmation that the bond covenants will not be jeopardized. Dondlinger stated Connolly requested a letter from Gilmore Bell, Bond Counsel, and Bond Counsel has provided a letter confirming this activity would not jeopardize the bond covenants. Dondlinger also confirmed the JPA is in a strong financial position to be able to do this and that he has complete confidence that this capital investment can be funded without any adverse effect to the bond ratings or to the fund balance position for the West Haymarket JPA. Clare commented he appreciated the work put forward with security. He stated it's really important to provide security for the beautiful park so people can capitalize and use the park.

Todd Ogden, President and CEO of Downtown Lincoln Association; Diane Temme Stinton of TMCO; Stacy Clouse with Olsson; Clay Smith of Speedway; and Kent Seacrest of Seacrest and Kalkowski; came forward and provided their feedback in support of the project.

Maggie Stuckey-Ross, Parks and Recreation Director, explained how this urban park is new territory for the City and how this park will operate similarly to The RiverFront park in Omaha with security, security cameras, etc. Gaylor Baird asked if park staff will be available in the park and Stuckey-Ross explained there will be two parks and recreation teams at South Haymarket Park, one will be the operations team that will be taking care of the daily needs of the facility, they will be full-time staff and this will be their home base. There will also be an activator, or an events coordinator, who will help bring positive use into the park for all of the different amenities, coordinating schedules, making sure people know what's available, and bringing the park to life.

Beckius moved approval. Clare seconded the motion. Motion carried 3-0.

Beckius took a moment to thank Stuckey-Ross, Hoppe, Connolly, Dondlinger, and all of the people in the audience for their hard and diligent work over the last few months to get us to where we are today.

Gaylor Baird thanked our community, all of the folks that came before the Board, and the people in this room that helped lead us to this moment. She explained how this project has been a testament to the strength, vision and engagement of our community and we wouldn't be here without that. She commented that South Haymarket Park will support the continued growth of residential living downtown, catalyze economic development and tourism for our community that will be open to everyone in our community and anyone visiting our community.

Item 10 - Bill No. WH 26-6 Resolution approving an Agreement for Services at South Haymarket Park between the West Haymarket JPA and the City of Lincoln.

This item was briefly discussed with the above item. Ogden explained to the Board members the role the ambassadors will have in the park and surrounding area. Beckius moved approval. Clare seconded the motion. Motion carried 3-0.

Item 16 - Next Meeting Date.
The next meeting date will be Thursday, April 23, 2026, at 2:30 p.m. in Council Chambers, First Floor of the County-City Building.

Item 17 - Motion to Adjourn
Beckius moved to adjourn. Motion seconded by Clare. The meeting adjourned at 3:41 p.m.

West Haymarket Joint Public Agency
Payment Register by Payee
Payment Dates January 2026 - February 2026

Vendor	Explanation -Remark-	Document Number	Business Unit	Object Account	Payment Date	Payment Number	Amount
234392 - Union Bank & Trust Co							
	WHJPA Series 2010B 1/25-12/25	2310573	195021 - JPA 2010B/C Debt Service	6233 - Bd Trustee Pmt-Serv Chg	1/21/2026	00649020	540.00
	WHJPA Series 2010C 1/25-12/25	2310574	195021 - JPA 2010B/C Debt Service	6233 - Bd Trustee Pmt-Serv Chg	1/21/2026	00649020	540.00
	WHJPA Series 2013 1/25-12/25	2310575	195041 - JPA 2013 Debt Service	6233 - Bd Trustee Pmt-Serv Chg	1/21/2026	00649020	540.00
							1,620.00
362052 - Mitsubishi Electric Power Product Inc							
	Center hung scoreboard balance	2309497	06095 - W Haymarket Surplus	6132 - Buildings	1/15/2026	00229244	344,291.90
	Pinnacle Bank Arena Scoreboard	2309481	06095 - W Haymarket Surplus	6132 - Buildings	1/15/2026	00229244	162,305.92
							506,597.82
37233 - Olsson Inc							
	W Haymarket JPA Env Services	2308688	06095 - W Haymarket Surplus	5628 - Consultant Services	1/8/2026	00228970	553.75
	W Haymarket JPA Env Services	2309483	06095 - W Haymarket Surplus	5628 - Consultant Services	1/15/2026	00229170	1,315.75
	W Haymarket JPA Env Services	2311196	06095 - W Haymarket Surplus	5628 - Consultant Services	1/29/2026	00229715	2,267.37
							4,136.87
406174 - Forvis Mazars LLP							
	WHJPA #0081643	2308685	06095 - W Haymarket Surplus	5624 - Auditing Service	1/8/2026	00229026	22,000.00
	WHJPA #0081643	2313120	06095 - W Haymarket Surplus	5624 - Auditing Service	2/12/2026	00230331	4,460.00
							26,460.00
431100 - City of Lincoln - Parking							
	Parking Mgmt Dec 2025	2311197	06095 - W Haymarket Surplus	5643 - Deck 1 Mgmt Services	1/28/2026	00649080	86,995.56
	Parking Mgmt Dec 2025	2311197	06095 - W Haymarket Surplus	5643 - Deck 3 Mgmt Services	1/28/2026	00649080	74,011.21
	Parking Mgmt Dec 2025	2311197	06095 - W Haymarket Surplus	5643 - Deck 2 Mgmt Services	1/28/2026	00649080	59,622.36
	Parking Mgmt Nov-2025	2311198	06095 - W Haymarket Surplus	5643 - Deck 1 Mgmt Services	1/28/2026	00649080	55,882.14
	Parking Mgmt Nov-2025	2311198	06095 - W Haymarket Surplus	5643 - Deck 3 Mgmt Services	1/28/2026	00649080	46,827.27
	Parking Mgmt Nov-2025	2311198	06095 - W Haymarket Surplus	5643 - Deck 2 Mgmt Services	1/28/2026	00649080	46,394.30
	Parking Mgmt Dec 2025	2311197	06095 - W Haymarket Surplus	5643 - West Depot Mgmt Services	1/28/2026	00649080	3,400.06
	Parking Mgmt Nov-2025	2311198	06095 - W Haymarket Surplus	5643 - West Depot Mgmt Services	1/28/2026	00649080	2,806.06
							375,938.96
53356 - Lincoln Electric System							
	277 Pinnacle Arena Dr	2308681	06095 - W Haymarket Surplus	5821 - Electricity - Bldg & Grnds	1/8/2026	00228982	352.05
	200 N 7th St	2308679	06095 - W Haymarket Surplus	5821 - Electricity - Bldg & Grnds	1/8/2026	00228982	142.00
	605 N 8th St Pk Lot LGH	2308680	06095 - W Haymarket Surplus	5821 - Electricity - Bldg & Grnds	1/8/2026	00228982	57.21
	277 Pinnacle Arena Dr	2312206	06095 - W Haymarket Surplus	5821 - Electricity - Bldg & Grnds	2/5/2026	00230008	421.16
	200 N 7th St	2312203	06095 - W Haymarket Surplus	5821 - Electricity - Bldg & Grnds	2/5/2026	00230008	157.97
	605 N 8th ST PK LOT LGH	2312204	06095 - W Haymarket Surplus	5821 - Electricity - Bldg & Grnds	2/5/2026	00230008	64.38
							1,194.77
588846 - District Energy Corporation							
	Customer Id 0005	2310572	06095 - W Haymarket Surplus	5835 - Thermal Heating & Cooling	1/22/2026	00229561	273,502.50
	Customer Id 0005	2313122	06095 - W Haymarket Surplus	5835 - Thermal Heating & Cooling	2/12/2026	00230353	287,010.15
							560,512.65
592356 - Firethorn Golf Club							
	Occupation Tax Refund	2314724	06094 - W Haymarket Revenue	3080 - Bar/Restaurant	2/25/2026	00649293	2,726.48
							2,726.48
598263 - Project Control of Texas Inc							
	program management services	2309500	06095 - W Haymarket Surplus	5621 - Misc Contractual Services	1/15/2026	00229288	969.00

Vendor	Explanation -Remark-	Number	Business Unit	Object Account	Date	Number	Amount
	program management services	2314733	06095 - W Haymarket Surplus	5621 - Misc Contractual Services	2/26/2026	00230915	2,910.00
							3,879.00
604774 - Pinnacle Bank Arena							
	Arena Repairs Maint&CIP Dec 25	2311201	06095 - W Haymarket Surplus	5870 - Other Bldg Maintenance	1/29/2026	00229844	71,030.87
	Arena Repairs Maint&CIP Dec 25	2311201	06095 - W Haymarket Surplus	5420 - Minor Equipment	1/29/2026	00229844	44,356.09
	Arena Repairs Maint&CIP Dec 25	2311201	06095 - W Haymarket Surplus	6132 - Buildings	1/29/2026	00229844	13,857.92
	Arena Repairs Maint&CIP Jan 26	2314730	06095 - W Haymarket Surplus	5870 - Other Bldg Maintenance	2/26/2026	00230927	50,560.83
	Arena Repairs Maint&CIP Jan 26	2314730	06095 - W Haymarket Surplus	6132 - Buildings	2/26/2026	00230927	18,458.70
	Arena Repairs Maint&CIP Jan 26	2314730	06095 - W Haymarket Surplus	5420 - Minor Equipment	2/26/2026	00230927	14,072.44
							212,336.85
620543 - Midwest Alarm Services							
	Amtrak Feb 2026	2310570	06095 - W Haymarket Surplus	5683 - Alarm Monitoring	1/22/2026	00229614	30.00
	Amtrak Inspection	2311195	06095 - W Haymarket Surplus	5683 - Alarm Monitoring	1/29/2026	00229890	100.00
	Amtrak Mar 2026	2314729	06095 - W Haymarket Surplus	5683 - Alarm Monitoring	2/26/2026	00230961	30.00
							160.00
625305 - Stromberg, Gary							
	Red 1 Refund	2313953	06096 - W Haymarket Parking Revenue	3941 - Deck 1-Lease	2/18/2026	00649252	808.00
							808.00
630975 - Black Hills Energy							
	277 Pinnacle Arena Dr	2308678	06095 - W Haymarket Surplus	5825 - Natural Gas	1/8/2026	00229127	129.56
	277 Pinnacle Arena Dr	2312207	06095 - W Haymarket Surplus	5825 - Natural Gas	2/5/2026	00230183	131.59
							261.15
631005 - Windstream							
	402-477-6387	2309485	06095 - W Haymarket Surplus	5829 - Telephone	1/15/2026	00229390	145.86
	402-477-6387	2313119	06095 - W Haymarket Surplus	5829 - Telephone	2/12/2026	00230491	145.59
							291.45
632804 - Heartland Natural Gas LLC							
	277 Pinnacle Arena	2312208	06095 - W Haymarket Surplus	5825 - Natural Gas	2/5/2026	00230201	253.59
							253.59
635664 - Advanced Digital Solutions LLC							
	400 Pinnacle Arena Drive	2311194	06095 - W Haymarket Surplus	5420 - Minor Equipment	1/29/2026	00229976	8,000.00
							8,000.00
77462 - Lancaster County Treasurer							
	Maintenance WHJPA	2309494	06095 - W Haymarket Surplus	5856 - City Share of Project	1/15/2026	00229190	10,725.05
	Maintenance WHJPA	2309493	06095 - W Haymarket Surplus	5856 - City Share of Project	1/15/2026	00229190	3,290.44
	Maintenance WHJPA	2309495	06095 - W Haymarket Surplus	5856 - City Share of Project	1/15/2026	00229190	3,110.97
	Maintenance WHJPA	2309491	06095 - W Haymarket Surplus	5856 - City Share of Project	1/15/2026	00229190	2,880.48
	Maintenance WHJPA	2309488	06095 - W Haymarket Surplus	5856 - City Share of Project	1/15/2026	00229190	1,546.10
	Maintenance WHJPA	2309492	06095 - W Haymarket Surplus	5856 - City Share of Project	1/15/2026	00229190	269.61
	Maintenance WHJPA	2309496	06095 - W Haymarket Surplus	5856 - City Share of Project	1/15/2026	00229190	263.99
							22,086.64
77921 - County/City Property Management							
	Acct 209-1 12/25	2310571	06095 - W Haymarket Surplus	5261 - Postage	1/22/2026	00229479	103.96
	Acct 209-1 01/26	2314728	06095 - W Haymarket Surplus	5261 - Postage	2/26/2026	00230833	236.10
							340.06
98415 - Lincoln Water System Water Bills Only							
	277 Pinnacle Arena Dr	2314726	06095 - W Haymarket Surplus	5830 - Water	2/25/2026	00649280	285.76
							285.76
							1,727,890.05

West Haymarket Joint Public Agency
Statement of Revenues and Expenditures
As of 02/28/2026

	JPA Fund 950	JPA Fund 951	JPA Funds 952-956	JPA Total	Prior Year JPA Total	Variance to Prior Year
Revenues:						
Occupation Taxes	12,116,142.13			12,116,142.13	11,620,005.54	496,136.59
Intergovernmental	1,664,387.34			1,664,387.34	1,704,323.39	(39,936.05)
Permits & Fees - P/F	5,855.05			5,855.05	5,730.00	125.05
Reimbursement for Serv -R/S	1,222,219.51			1,222,219.51	1,072,706.59	149,512.92
Interest	1,070,322.44	26,171.75		1,096,494.19	1,405,329.32	(308,835.13)
Suite and Premium Seating	825,726.02			825,726.02	639,429.93	186,296.09
Facility Lease & Other Rent	44,844.07			44,844.07	45,016.26	(172.19)
Parking Revenue - R/S	2,539,015.73			2,539,015.73	2,282,340.17	256,675.56
Naming Rights & Sponsorship	743,545.00			743,545.00	1,250,413.00	(506,868.00)
Miscellaneous	(6,922.14)			(6,922.14)	16,585.85	(23,507.99)
Total Revenue	**20,225,135.15**	**26,171.75**		**20,251,306.90**	**20,041,880.05**	**209,426.85**
Expenditures:						
General Government	9,151,598.69			9,151,598.69	5,717,961.67	3,433,637.02
Debt Service-Service Charge	2,768.00			2,768.00	2,720.00	48.00
Debt Service P & I	16,917,359.83			16,917,359.83	16,862,828.06	54,531.77
Total Expenditures	**26,071,726.52**			**26,071,726.52**	**22,583,509.73**	**3,488,216.79**
Excess (Deficiency) of Revenue Over Expenditures	**(5,846,591.37)**	**26,171.75**		**(5,820,419.62)**	**(2,541,629.68)**	**(3,278,789.94)**
Other Financing Sources (Uses):						
Total Other Financing Sources (Uses)						
Excess (Deficiency) of Revenues And Other Financing Sources Over Expenditures and Other Uses	**(5,846,591.37)**	**26,171.75**		**(5,820,419.62)**	**(2,541,629.68)**	**(3,278,789.94)**
Fund Balance Beginning of Year				**48,993,334.00**	**51,475,755.72**	**(2,482,421.72)**
Fund Balance End of Year				**43,172,914.38**	**48,934,126.04**	**(5,761,211.66)**

West Haymarket Joint Public Agency

Fiscal Year to Date Arena Occupation Tax Summary

As of 2/28/2026

Fiscal Year to Date Comparison			
YTD Occupation taxes	$	12,116,142	
Prior YTD	$	11,620,006	
Difference	$	496,136	4.27%

Budget vs Original Projection			
FY 2025-26 Budget	$	23,517,305	
2026 Original Projection*	$	15,897,720	
Excess of current budget over original projection	$	7,619,585	47.93%
Corresponding year in original projections*		2045	

Inception to Date Comparison			
ITD Occupation Taxes Collected	$	260,259,463	
ITD Original Projections	$	205,934,667	
Excess of Actual over Original Projections	$	54,324,796	26.38%

West Haymarket Joint Public Agency
Operating Expenditure Report
For the period ending 02/28/26

Fund Group	Original Budget	Prior Year Carryover and Revisions	Total Budget	Actual YTD February 2026	Encumbered YTD February 2026	Available Balance
51 - JPA						
00950 - West Haymarket Revenue						
11 - Materials & Supplies						
5221. - Office Supplies	250.00	0.00	250.00	0.00	0.00	250.00
5261. - Postage	3,000.00	0.00	3,000.00	842.37	0.00	2,157.63
5323. - Bldg Maint Supplies	500.00	0.00	500.00	0.00	0.00	500.00
5420. - Minor Equipment	855,000.00	0.00	855,000.00	272,849.66	0.00	582,150.34
Total - 11 - Materials & Supplies	**858,750.00**	**0.00**	**858,750.00**	**273,692.03**	**0.00**	**585,057.97**
12 - Other Services & Charges						
5621. - Misc Contractual Services	1,009,435.00	36,891.10	1,046,326.10	538,704.50	44,572.50	463,049.10
5624. - Auditing Service	26,460.00	0.00	26,460.00	26,460.00	0.00	0.00
5628. - Consultant Services	28,000.00	0.00	28,000.00	22,895.37	14,000.00	-8,895.37
5631. - Data Processing Service	3,210.00	0.00	3,210.00	0.00	0.00	3,210.00
5633. - Software	0.00	0.00	0.00	69,300.00	0.00	-69,300.00
5635. - Delivery Service	1,000.00	0.00	1,000.00	330.00	0.00	670.00
5643. - Management Services	1,820,000.00	0.00	1,820,000.00	1,019,086.00	0.00	800,914.00
5643.61 - Deck 1 Mgmt Services	817,367.00	0.00	817,367.00	464,267.89	0.00	353,099.11
5643.62 - Deck 2 Mgmt Services	613,212.00	0.00	613,212.00	341,998.97	0.00	271,213.03
5643.63 - Deck 3 Mgmt Services	626,611.00	0.00	626,611.00	357,039.20	0.00	269,571.80
5643.65 - West Depot Mgmt Services	56,626.00	0.00	56,626.00	16,683.80	0.00	39,942.20
5683.01 - Fire Suppression	120.00	0.00	120.00	0.00	0.00	120.00
5683.04 - Snow Removal	500.00	0.00	500.00	0.00	0.00	500.00
5683.05 - Alarm Monitoring	650.00	0.00	650.00	310.00	0.00	340.00
5762. - Photocopying	20.00	0.00	20.00	0.00	0.00	20.00
5763. - Printing	450.00	0.00	450.00	132.30	0.00	317.70
5783. - General Liability SI	29,349.00	0.00	29,349.00	29,349.00	0.00	0.00
5784. - Misc Insurance	0.00	0.00	0.00	28,438.00	0.00	-28,438.00
5786. - Property SI	301,528.00	0.00	301,528.00	301,528.00	0.00	0.00
5794. - Public Officials	28,438.00	0.00	28,438.00	0.00	0.00	28,438.00
5795. - Misc Insurance Floater	4,030.00	0.00	4,030.00	4,030.00	0.00	0.00
5821. - Electricity - Bldg & Grnds	8,000.00	0.00	8,000.00	3,346.17	0.00	4,653.83
5825. - Natural Gas	2,000.00	0.00	2,000.00	1,493.10	0.00	506.90
5829. - Telephone	1,900.00	0.00	1,900.00	872.61	0.00	1,027.39
5830. - Water	1,800.00	0.00	1,800.00	839.16	0.00	960.84
5835. - Thermal Heating & Cooling	3,130,000.00	0.00	3,130,000.00	1,566,943.65	0.00	1,563,056.35
5856. - City Share of Project	23,000.00	0.00	23,000.00	22,086.64	0.00	913.36

West Haymarket Joint Public Agency
Operating Expenditure Report
For the period ending 02/28/26

Fund Group	Original Budget	Prior Year Carryover and Revisions	Total Budget	Actual YTD February 2026	Encumbered YTD February 2026	Available Balance
5862. - Grounds Maintenance	16,000.00	0.00	16,000.00	0.00	0.00	16,000.00
5870. - Other Bldg Maintenance	937,622.00	0.00	937,622.00	405,714.04	0.00	531,907.96
5928. - Rent of Co/City Bldg Space	1,034.00	0.00	1,034.00	1,138.20	0.00	-104.20
5931. - Parking Rent Bldg Comm	105.00	0.00	105.00	0.00	0.00	105.00
5952. - Advertising/Media Serv	400.00	0.00	400.00	133.41	0.00	266.59
5977. - Fees/Licenses/Titles/Permits	600.00	0.00	600.00	2,560.01	0.00	-1,960.01
5988. - Transfer of Funds	1,500,000.00	0.00	1,500,000.00	0.00	0.00	1,500,000.00
5993. - Fees Paid to State of NE	25.00	0.00	25.00	25.00	0.00	0.00
5996. - Credit Card/Bank Fees	7,500.00	0.00	7,500.00	187.17	0.00	7,312.83
Total - 12 - Other Services & Charges	**10,996,992.00**	**36,891.10**	**11,033,883.10**	**5,225,892.19**	**58,572.50**	**5,749,418.41**
13 - Capital Outlay - Equipment						
6076. - Miscellaneous Equipment	259,381.00	0.00	259,381.00	0.00	0.00	259,381.00
Total - 13 - Capital Outlay - Equipment	**259,381.00**	**0.00**	**259,381.00**	**0.00**	**0.00**	**259,381.00**
14 - Capital Outlay - Improvements						
6132. - Buildings	2,691,891.00	1,196,173.00	3,888,064.00	3,354,080.47	0.00	533,983.53
6140. - Grounds Improvements	1,200,000.00	0.00	1,200,000.00	297,934.00	0.00	902,066.00
6142. - Sewer System	97,200.00	0.00	97,200.00	0.00	0.00	97,200.00
Total - 14 - Capital Outlay - Improvements	**3,989,091.00**	**1,196,173.00**	**5,185,264.00**	**3,652,014.47**	**0.00**	**1,533,249.53**
15 - Debt Service						
6233. - Bd Trustee Pmt-Serv Chg	2,720.00	0.00	2,720.00	2,768.00	0.00	-48.00
6234. - Bd Trustee Pmt-Principal	10,485,000.00	0.00	10,485,000.00	10,485,000.00	0.00	0.00
6235. - Bd Trustee Pmt-Interest	12,670,795.00	0.00	12,670,795.00	6,432,359.83	0.00	6,238,435.17
Total - 15 - Debt Service	**23,158,515.00**	**0.00**	**23,158,515.00**	**16,920,127.83**	**0.00**	**6,238,387.17**
Total - 00950 - West Haymarket Revenue	**39,262,729.00**	**1,233,064.10**	**40,495,793.10**	**26,071,726.52**	**58,572.50**	**14,365,494.08**
Total - 51 - JPA	**39,262,729.00**	**1,233,064.10**	**40,495,793.10**	**26,071,726.52**	**58,572.50**	**14,365,494.08**
Grand Total	**39,262,729.00**	**1,233,064.10**	**40,495,793.10**	**26,071,726.52**	**58,572.50**	**14,365,494.08**

PINNACLE BANK ARENA
Income Statement
For the Six Months Ending Saturday, February 28, 2026

	Year to Date Actual	Year to Date Budget	Year to Date Variance	Annual Budget
Direct Event Income				
Event Income				
Rent	654,855	613,683	41,172	1,231,936
Service Income	922,687	1,520,900	(598,213)	2,537,300
Service Expense	(2,503,778)	(3,119,156)	615,378	(5,097,179)
Total Direct Event Income	**(926,236)**	**(984,573)**	**58,337**	**(1,327,943)**
F&B Revenue, Net				
F & B Revenue (Net)	3,064,212	2,289,571	774,641	3,313,649
Total F&B Revenue, Net	**3,064,212**	**2,289,571**	**774,641**	**3,313,649**
Ticketing Revenue				
Service Fee Revenue	1,292,401	1,399,138	(106,737)	2,212,850
Facility Fee Revenue	404,959	426,244	(21,285)	717,610
Total Ticketing Revenue	**1,697,360**	**1,825,381**	**(128,021)**	**2,930,460**
Premium Event Related				
Premium Revenue	80,273	45,400	34,873	66,650
Total Premium Event Related	**80,273**	**45,400**	**34,873**	**66,650**
Ancillary Income				
Merchandise	183,657	142,730	40,927	209,160
Event Parking	363,313	324,308	39,005	383,258
Total Ancillary Income	**546,970**	**467,038**	**79,931**	**592,418**
Total Event Income	**4,462,578**	**3,642,818**	**819,761**	**5,575,235**
Non-Event Income				
Other Operating Income	736,264	624,054	112,210	1,248,100
JPA Operational Increment	300,000	300,000	0	600,000
Total Non-Event Income	**1,036,264**	**924,054**	**112,210**	**1,848,100**
Adjusted Gross Income	**5,498,842**	**4,566,872**	**931,970**	**7,423,335**
Indirect Expenses				
Employee Salaries and Wages	2,739,460	2,964,746	225,286	5,380,150
Benefits	167,456	206,716	39,259	413,432
Less: Event Labor Allocations	(1,318,091)	(1,335,089)	(16,997)	(2,120,835)
All Other Operating Payroll	455,168	308,795	(146,374)	617,589
Total Employee Wages and Benefits	2,043,994	2,145,168	101,174	4,290,335
Fixed Costs	52,902	52,500	(402)	105,000
Operations	16,880	21,000	4,120	42,000
Utilities	618,154	619,750	1,596	1,198,000
Repair & Maintenance	404	2,500	2,096	5,000
IT	70,882	65,500	(5,382)	131,000
Other	86,992	77,000	(9,992)	154,000
Professional Services	35,978	22,000	(13,978)	44,000
Service Charges & Fees	190,914	139,000	(51,914)	278,000
Staff Related Costs	48,263	43,500	(4,763)	87,000
Supplies	57,887	88,500	30,613	177,000
Insurance	331,697	302,000	(29,697)	604,000
T&E	16,694	30,000	13,306	60,000
Venue Management Fee	122,878	124,000	1,122	248,000
Total Operating Expenses	**3,694,518**	**3,732,418**	**37,900**	**7,423,335**
Net Income (Loss)	**1,804,324**	**834,454**	**969,870**	**(0)**
Beginning Retained Earnings	2,812,875	2,812,875	0	2,812,875
Net Income (Loss)	1,804,324	834,454	969,870	0
Ending Retained Earnings	**4,617,199**	**3,647,328**	**969,870**	**2,812,875**

WH 26-7 Introduce: 4-23-26

RESOLUTION NO.

BE IT RESOLVED by the Board of Representatives of the West Haymarket Joint Public Agency:

That the attached Agreement for Engineering Services between the West Haymarket Joint Public Agency and Olsson, Inc. for semi-annual inspections in accordance with the West Haymarket Redevelopment Site North and South O & M Plans, for limited on-call soil sampling, and for a complete routine inspection of the Lincoln Pedestrian Bridge, for a sum not to exceed $94,800.00, is hereby approved and the Chairperson of the West Haymarket Joint Public Agency Board of Representatives is hereby authorized to execute said Agreement.

Adopted this _____ day of April, 2026.

Introduced by:

_____

Approved as to Form & Legality:

_____
Legal Counsel for
West Haymarket Joint Public Agency

West Haymarket Joint Public Agency
Board of Representatives

_____
Leirion Gaylor Baird

_____
Tim Clare

_____
Tom Beckius

WEST HAYMARKET JOINT PUBLIC AGENCY
AGREEMENT FOR ENGINEERING SERVICES

THIS AGREEMENT is entered into by and between West Haymarket Joint Public Agency, a Nebraska political subdivision (the WHJPA), and

Olsson, Inc.
601 P Street, Suite 200, Lincoln, NE 68508
(Engineer).

In consideration of the mutual covenants herein contained, WHJPA hereby agrees to contract with Engineer to perform engineering and related professional services hereinafter outlined in connection with various services to be performed by the Engineer for the WHJPA, as more fully described herein (the Work).

SECTION I — SCOPE OF SERVICES

Engineer agrees to timely and professionally complete the Work described above and herein, furnish and pay all costs, including any related taxes, and to furnish all labor, supplies and material and everything else reasonably necessary to complete the same unless specifically provided otherwise in this Agreement for the services listed in the Scope of Services (Scope), attached hereto. Such Scope of Services may also be referred to as "the Work." To the extent that the Scope, Engineer's proposal, or any other attachment hereto is in conflict with this Agreement, this Agreement shall control.

SECTION II — COMPENSATION

For the services or Work covered by this Agreement, WHJPA agrees to pay Engineer as follows:

1. **Basic Services.** Engineer shall be paid the compensation set forth in the Scope attached hereto, plus all allowed actual expenses and the total of all fees and allowed actual expenses shall not exceed $94,800.00 without written consent of the WHJPA. WHJPA is not responsible for fees or expenses incurred prior to full and complete execution of this Agreement unless otherwise agreed to by WHJPA.

2. **Additional Services or Change in Scope.** WHJPA may from time to time, require additional services or change in Scope. Such services, including the amount of compensation for such services, which are mutually agreed upon by and between WHJPA and Engineer, shall be effective when incorporated by written amendments to this Agreement. Additional services or change in Scope shall not begin until the amendment is executed.

3. **Cost Overruns.** Engineer is responsible for determining if the actual fees or expenses will exceed the maximum amount stated above. If at any time during the Work, Engineer determines that the fees or expenses will exceed, or have exceeded the maximum amount stated above, Engineer must immediately notify WHJPA in writing and describe which fees or expenses are causing the overrun and the reason. Engineer must also estimate the additional fees or expenses needed to complete the Work. WHJPA will then determine if the maximum amount is to be increased, remain the same, or determine if the scope of the Work needs to be modified or terminated. An amendment will be prepared if cost overruns are authorized by WHJPA.

4. **Term of Agreement.** The term of this Agreement shall commence upon execution of this Agreement by both parties unless otherwise set forth in the Scope of Work and shall continue until completion of all obligations of this Agreement, but in no event longer than August 31, 2028, unless approved extensions are issued by written amendment.

5. **Invoices.** Unless otherwise set forth in the attachments, invoices shall be payable as follows:
   Monthly X
   Lump Sum
   Other:_____
   Invoices must present activities of Engineer and/or any subcontractors showing not less than actual hours worked, hourly rates applied, actual expenses incurred unless otherwise specified in the Scope or Fee Schedule, and any applicable supporting documentation, such as, but not limited to, receipts. All invoices shall be in a format acceptable to WHJPA.

6. **Progress Reports**. Invoices shall be substantiated by written progress reports which indicate the percentage of the Work completed or other metrics of progress agreed to or reasonably requested by WHJPA or as set forth in the proposal or Scope. A written progress report shall be provided to WHJPA each month in which Work is done by Engineer. Engineer shall provide a progress report within a reasonable time after a request for such report by WHJPA, separate and apart from the billing process.

7. **Payment.** WHJPA shall pay Engineer within thirty (30) days of approval of Engineer's invoices. WHJPA may reject all or part of any invoice for any reasonable cause. Payment is dependent upon whether the monthly progress reports provide adequate substantiation for the Work and whether WHJPA determines that the Work is satisfactory. Upon determination that the Work was adequately substantiated and satisfactory, payment will be made in the amount of one hundred percent (100%) of the billed actual costs and hourly fees. After Engineer has completed all Work required under this Agreement, a final invoice shall be submitted to WHJPA. Upon acceptance of the Work by WHJPA and final payment is made, an audit of all invoiced amounts may be completed by WHJPA or its authorized representative.

8. **Final Payment.** The acceptance of the final payment will constitute and operate as a release to WHJPA for all claims and liability of Engineer, its representatives, and assigns, for any and all things done, furnished, or relating to the services and Work rendered by or in connection with this Agreement or any part thereof. Engineer agrees to reimburse WHJPA for any overpayments.

SECTION III — WHJPA'S RESPONSIBILITIES

If available, WHJPA will furnish, as required for the Work and not at the expense of Engineer, the following items:

1. Property, boundary, easement, right-of-way, utility surveys, and property descriptions when such information is required.

2. All maps, drawings, records, audits, annual reports, and other data that are available in the files of WHJPA or City of Lincoln and which may be useful in the Work involved under this Agreement, including existing surveys, maps, and boring information for the site. Engineer

must identify and specifically request available information by itemized written request with sufficient detail to identify existing documents. WHJPA does not warrant or represent that such information is accurate or complete with regard to the Work.

3. Access to public and private property, as necessary, when required in conduct of field investigations.

4. Charges for review of drawings and specifications by governmental agencies required for concurrence or permits, if any.

SECTION IV — OTHER MATTERS

It is mutually understood and agreed:

1. **Termination of Agreement.** Termination may occur for any of the following reasons:
   a) This Agreement may be terminated by WHJPA or Engineer if the other party fails to adequately perform any material obligation required by this Agreement (Default). Termination rights under this section may be exercised only if the defaulting party fails to cure a Default within ten (10) calendar days after receiving written notice from the non-defaulting party specifying the nature of the Default.

   b) WHJPA may terminate this Agreement, in whole or part, for any reason for WHJPA's own convenience upon at least ten (10) calendar days' written notice to Engineer.

   c) WHJPA may terminate this Agreement in whole or in part when funding is not lawfully available for expenditure or when sources of funding are terminated, suspended, reduced, or otherwise not forthcoming through no fault of WHJPA. In the event of unavailability of funds to pay any amounts due under this Agreement, WHJPA shall immediately notify Engineer, and this Agreement shall terminate without penalty or expense to WHJPA. Upon termination, WHJPA shall pay Engineer for any approved and documented Work completed up to the date of termination, but not to exceed the maximum amount allowed by this Agreement.

   d) If the Agreement is terminated by WHJPA as provided in (b) or (c) above, Engineer shall be paid for all Work performed, and reimbursable expenses incurred, not to exceed the maximum amounts payable under the compensation section above, up until the date of termination. Engineer hereby expressly waives any and all claims for damages or compensation arising under this Agreement except as set forth in this section in the event of termination.

   e) Engineer agrees that, upon termination as provided in this section (a) above, Engineer shall not be employed by any developer or other party who is or may be interested in the Work, without prior written approval of WHJPA.

   f) WHJPA reserves the right to withhold payment for Work rendered that is not in compliance with this Agreement or setoff against payments due.

2. **Project Representatives.** Kim Morrow will act as WHJPA's Authorized Representative for

the Work and Jackie Morrissey will act as Engineer's authorized representative. Engineer's authorized representative shall have direct and responsible charge for timely completing Engineer's responsibilities. All changes and other matters requiring decisions on the part of WHJPA will be administered and directed by WHJPA's Authorized Representative.

3. **Cost Estimates**. Engineer represents that construction estimates are done according to the Scope and shall comply with the current applicable WHJPA of Lincoln Standard Specifications for Municipal Construction, using unit prices where possible. Engineer does not warrant that contractor bids will be acceptable to WHJPA.

4. **Signatures and Approvals.** All submittals by Engineer shall be complete for project purposes and include all required seals, signatures, and approvals.

5. **Construction Phase Changes.** All design changes made during construction must be approved by WHJPA in writing.

6. **Advisory Capacity for WHJPA for Disputes.** In disputes between WHJPA and any other party, Engineer shall advise WHJPA on issues concerning the Work.

7. **Ownership of Drawings and Specifications.** Upon termination or final payment, drawings, specifications, electronic files, and other work product or deliverables (information) shall become the property of WHJPA as soon as payment for the same has been completed or termination has been affected. Engineer may retain copies of all information for its records and use if it so desires. In the event WHJPA elects to use portions of or all of the information contained in the documents prepared for the Work, for any purpose other than the specific purpose for which they were prepared, WHJPA agrees to hold harmless and indemnify Engineer for and against any and all liability in any manner whatsoever arising out of the utilization of such information.

8. **Engineer's Supervision; Seal.** All required Work shall be performed under the direct supervision of a registered professional engineer licensed to practice in the State of Nebraska. Engineer also hereby agrees to affix the seal of a registered professional engineer licensed to practice in the State of Nebraska on all plans and specifications prepared hereunder.

9. **Independent Contractor**. WHJPA is interested only in the results produced by this Agreement. Engineer has sole and exclusive charge and control of the manner and means of performance. Engineer shall perform as an independent contractor, and it is expressly understood that neither Engineer nor any of its staff are employees of WHJPA and are not entitled to any WHJPA benefits including, but not limited to, overtime, retirement benefits, workers' compensation, sick leave, injury leave, or other leave provisions.

10. **Fair Employment.** Engineer shall not discriminate against any employee (or applicant for employment) with respect to compensation, terms, advancement potential, conditions, or privileges of employment, because of such person's race, color, religion, sex, disability, national origin, ancestry, age, or marital status pursuant to the requirements of Lincoln Municipal Code Chapter 11.08, Neb. Rev. Stat. § 48-1122, as amended, or such similar federal law as may be applicable.

11. **Fair Labor Standards.** Engineer shall maintain Fair Labor Standards in the performance of this Agreement as required by Chapter 73, Nebraska Revised Statues, as amended.

12. **Insurance; Coverage.** Engineer, prior to beginning the Work, agrees to WHJPA's Insurance requirements and shall provide proof of insurance coverage in a form satisfactory to WHJPA, which shall not withhold approval unreasonably, with the coverages, minimum limits, and endorsements described in the INSURANCE REQUIREMENTS FOR ALL WHJPA OF LINCOLN, LANCASTER COUNTY, AND PUBLIC BUILDING COMMISSION AGREEMENTS, attached and incorporated herein.

13. **Indemnification.** To the fullest extent permitted by law the Engineer shall indemnify, defend, and hold harmless the WHJPA and its elected officials, officers, agents, and employees of any of them from and against claims, damages, losses and expenses, including but not limited to attorney fees, arising out of or resulting from performance of the Work, provided that such claim, damage, loss or expense is attributable to bodily injury, sickness, disease or death, or to injury to or destruction of tangible or intangible property, including the Work itself, but only to the extent caused by the negligent, wrongful, or intentional acts or omissions of the Engineer, a subcontractor, anyone directly or indirectly employed by them or anyone for whose acts they may be liable, regardless of whether or not such claim, damage, loss or expense is caused in part by the negligence of a party indemnified hereunder. In the event the claim, damage, loss or expense is caused in part by the negligence of a party indemnified hereunder, the indemnification by the Engineer shall be prorated based on the extent of the liability of the party indemnified hereunder. Such obligation shall not be construed to negate, abridge, or reduce obligations of indemnity which would otherwise exist as to a party or person described in this Section.

14. **Limitations on Liability.** No limitations or waivers of liability requested or demanded by the Engineer shall be valid, enforceable, or binding on the WHJPA. In the event of a conflict with any attachments hereto, this clause shall control and shall survive termination of this Agreement.

15. **Sovereign Immunity**. Nothing in this Agreement shall be construed to waive the sovereign immunity of WHJPA.

16. **Copyrights, Royalties, and Patents; Warranty**.
    a) Without exception, Engineer represents and warrants that the consideration for this Agreement includes Engineer's payment, if any, for any and all royalties or costs due any third party arising from patents, trademarks, copyrights, and other similar intangible rights claimed by any such third party in any way involved with or related to the Work provided herein by Engineer pursuant to this Agreement. Further, Engineer shall pay all related royalties, license fees, or other similar fees for any such intangible rights. Engineer represents that all materials, processes, or other protected rights, if any, to be used in the creation of the Work have been duly licensed or authorized by the appropriate parties for such use. Engineer agrees to furnish WHJPA upon demand written documentation of such license or authorization and if unable to do so, Engineer agrees that WHJPA may withhold a reasonable amount from Engineer's compensation herein to defray any associated costs

to secure such license or authorization or defend any infringement claim.

b) Engineer shall indemnify WHJPA and defend suits or claims for infringement for damages, including but not limited to attorney's fees, of any patent, copyright, trademark, or other intangible rights that Engineer has used in the course of performing this Agreement.

c) Engineer represents and warrants to WHJPA that it is free to enter into this Agreement and that the performance thereunder will not conflict with any other Agreement to which Engineer may be a party. Engineer represents and warrants to WHJPA that the Work is unique and original, is clear of any claims or encumbrances, and does not infringe on the rights of any third parties.

d) Engineer agrees to and hereby transfers all right, title, and interest, including those of a property or copyright nature, in any reports, studies, data, website creation, digital files, imagery, metadata, maps, statistics, forms, and any other works or materials produced under the terms of this Agreement. No such work or materials produced, in whole or in part, under this Agreement, shall be subject to private use or copyright by Engineer without express written consent of WHJPA. WHJPA shall have the unrestricted rights of ownership of such works or materials and may freely copy, reproduce, broadcast, or otherwise utilize such works or materials as WHJPA deems appropriate. Engineer warrants that all materials, processes or other protected rights to be used have been duly licensed or authorized for WHJPA's use.

17. **Engineer's Standard of Care.** In providing the Work under this Agreement, Engineer shall perform in a manner consistent with that degree of care and skill ordinarily exercised by members of the same profession currently practicing under similar circumstances at the same time and in the same or similar locality. Upon notice to Engineer and by mutual agreement between the parties, Engineer will, without additional compensation, correct those services not meeting the standard set forth herein. Engineer further agrees that the Work provided shall conform to the requirements of this Agreement.

18. **Compliance with Law.** Engineer shall comply with all Federal, State, and local laws, rules, and regulations applicable to the Work, including applying for and obtaining all necessary permits, certifications, licenses, and approvals required by the law or regulations that relate to the Work.

19. **Nebraska Law.** This Agreement shall be construed pursuant to the laws of the State of Nebraska.

20. **Integration; Amendment; Assignment; Severability; Waiver.** This Agreement represents the entire agreement between the parties, and all prior negotiations and representations are hereby expressly excluded from this Agreement. This Agreement may be amended only by written agreement signed by both parties. Any assignment or transfer of any of the Work to be performed by Engineer is hereby prohibited unless prior written consent of WHJPA is obtained. This Agreement shall be binding upon the successors and assigns of the parties hereto. Each section of this Agreement is hereby declared to be independent of every other

section so far as inducement for the acceptance of this Agreement, and invalidity of any section of this Agreement shall not invalidate any other section thereof. The failure of either party to enforce any section of this Agreement shall not be construed as a waiver or limitation of that party's right to subsequently enforce and compel strict compliance with every section of this Agreement.

21. **Audit and Review.** This Agreement shall be subject to audit pursuant to Chapter 4.66 of the Lincoln Municipal Code, and all parties shall make available to a contract auditor, as defined therein, copies of all financial and performance related records and materials germane to this Agreement, as allowed by law. Engineer shall maintain, and also require that its Sub-Consultants/Subcontractors maintain, all books, documents, papers, accounting records, and other evidence pertaining to costs incurred and shall make such material available for examination at Engineer's office at all reasonable times during the Agreement term and for five (5) years from the date of final payment under this Agreement or for such time period as provided in the Work. Such materials must be available for inspection by WHJPA, State, FHWA, or any authorized representative of the state or federal governments and, when requested, Engineer shall furnish copies.

22. **Federal Immigration Verification.** In accordance with Neb. Rev. Stat. §§ 4-108 through 4-114, Engineer agrees to register with and use a federal immigration verification system to determine the work eligibility status of new employees performing services within the State of Nebraska. A federal immigration verification system means the electronic verification of the work authorization program of the Illegal Immigration Reform and Immigrant Responsibility Act of 1996, 8 U.S.C. §1324a, otherwise known as the E-Verify Program, or an equivalent federal program designated by the United States Department of Homeland Security or other federal agency authorized. Engineer shall not discriminate against any employee or applicant for employment to be employed in the performance of this section pursuant to the requirements of state law and 8 U.S.C. §1324b. Engineer shall require any sub-agreement or to comply with the provisions of this section. For information on the E-Verify Program, go to www.uscis.gov/everify.
    a) **Attestation Form.** If Engineer is an individual or sole proprietor, Engineer agrees to complete the United States Citizenship Attestation Form as provided by WHJPA and attach it to the Agreement.

    b) **Public Benefits Eligibility Status Check.** If Engineer is agreeing to determine eligibility for and provide a public benefit as public benefit is defined under Neb. Rev. Stat. §§ 4-108 through 4-114, Engineer agrees to have each applicant for public benefits attest that he or she is a U.S. citizen or qualified alien using the form attached. Engineer agrees to register and use the SAVE Program as required under Neb. Rev. Stat. §§ 4-108 through 4-114. If the applicant indicates he or she is an alien, Engineer shall verify the applicant's lawful presence in the United States as provided under the SAVE Program and retain all documentation and provide copies of such documentation at WHJPA's request. For information on the SAVE program, go to www.uscis.gov/SAVE.

23. **Living Wage**. If the compensation for the Work provided pursuant to this Agreement is equal

to or exceeds $25,000, this Agreement is subject to the Living Wage Ordinance Chapter 2.81 of the Lincoln Municipal Code. The ordinance requires that, unless specific exemptions apply or a waiver is granted, Engineer shall provide payment of a minimum living wage to employees providing services pursuant to this Agreement. Under the provisions of the Living Wage Ordinance, WHJPA shall have authority to terminate this Agreement and to seek other remedies for violation of this ordinance.

24. **Foreign Adversary Contracting Prohibition Act Certification**. In accordance with the Foreign Adversary Contracting Prohibition Act, Neb. Rev. Stat. §73-901 to §73-907, a public entity shall require a company that submits a bid, or proposal, or enters into any contract or contract renewal with any public entity, for technology related products or services for performance of the specific contract, to certify that the company is not a scrutinized company and will not subcontract with any scrutinized company for any aspect of performance of the contemplated contract; and that any technology related products or services to be provided do not originate with a scrutinized company. As such the Contractor agrees to do one of the following:
    (A) If the Contractor is providing technology related goods or services for the performance of the contract, Contractor agrees to complete and sign a Certification Form as provided by the WHJPA certifying that the Contractor is not a scrutinized company; or
    (B) If the Contractor is not providing technology related goods or services for the performance of the contract, Contractor agrees to complete and sign a Certification Form as provided by the WHJPA certifying that the Contractor is not providing such services and is not subject to the Act; or
    (C) If the Contractor is providing technology related goods for the performance of the contract, and Contractor is a scrutinized company that qualifies under Neb. Rev. Stat. §73-906(2) as an exception for the provision of manufactured goods only, Contractor agrees to complete and sign a Certification Form as provided by the WHJPA certifying that the contractor is a scrutinized company that meets the exception provided under the Act.

25. **Records Retention.** Unless WHJPA specifies in writing a different period of time, Engineer agrees to preserve and make available at reasonable times all of its books, documents, papers, records, and other evidence involving transactions related to this Agreement for a period of five (5) years from the date of the expiration or termination of this Agreement. See WHJPA of Lincoln Records Retention Schedule. Matters involving litigation shall be kept for one (1) year following the termination of litigation, including all appeals, if the litigation exceeds five (5) years.

26. **Document Control Clause.** The Agreement includes the following documents in order of priority:
    a) Addendums, Amendments, or Change Orders (if any) to the Scope of Services, Schedule, Fee or this Agreement;
    b) Scope of Services, Schedule, and Fee;
    c) Insurance Requirements, Certificates, and Endorsements;
    d) _____
    e) _____

For Agreement documents submitted prior to execution, if terms and conditions therein conflict with other Agreement documents, those Agreement documents with the date closest to the date of execution of this Agreement shall control.

27. **Superseding Agreement.** The WHJPA and Engineer hereby agree that this Agreement shall and does hereby replace and supersede the agreement between the WHJPA and Engineer of August 22, 2025 and found at WH01521 (2025 Agreement). All duties and responsibilities of the 2025 Agreement are carried over, transferred, and incorporated herein and additional duties are added herein as more fully set forth in the Scope of Services attached hereto. Upon execution of this Agreement, the 2025 Agreement shall be deemed terminated subject to survival of the terms and conditions therein being incorporated into this Agreement.

28. **Capacity.** Each party hereby represents and warrants to the other party that the execution of this Agreement is duly authorized and constitutes a legal, valid, and binding obligation of said party.

IN WITNESS WHEREOF, WHJPA and Engineer do hereby execute this Agreement as of the date of execution set forth below.

OLSSON, INC.
Engineer

Date:_____ By: _____

Name: Curtis Nunn

Title: Lead Scientist

WEST HAYMARKET JOINT PUBLIC AGENCY, a Nebraska political subdivision

Date:_____ By: _____
Leirion Gaylor Baird, Board Chair

SCOPE OF SERVICES

Olsson shall provide the following services (Scope of Services) to Client for the Project:

DESIGN SERVICES

Phase 101 – 2026, 2027, and 2028 WHJPA O&M Inspections

Task 101000 – 2026, 2027, and 2028 O&M Inspections
2026 – Time and Materials Not to Exceed (TMNTE) $4,750
2027 – TMNTE $5,250
2028 – TMNTE $2,900

Complete 2026 (summer and winter), 2027 (summer and winter), and 2028 (summer only) semi-annual inspections as required in the West Haymarket Redevelopment Site North (WHRSN) Operations and Maintenance (O&M) Plan (October 2015) and the West Haymarket Redevelopment Site South (WHRSS) O&M Plan (August 2018) – now excluding the Former Alter South site (located south and west of the intersection of 7th and N Streets) based on the 2025 Remedial Action Plan submitted on behalf of the City by Stantec.

Task 101001 – 2026 and 2027 On-Call Soil Sampling
2026 – TMNTE $7,000
2027 – TMNTE $7,200

- Olsson will provide on-call soil sampling services for up to 24 hours of fieldwork and up to 12 soil samples analyzed for up to TCLP RCRA Metals, VOCs, SVOCs, PAHs, and/or total PCBs. Assumes Olsson would be notified at least two weeks prior to collecting samples.
- Up to four site visits
- Standard laboratory data turnaround time of approximately 10 business days
- Brief comparison of data results to special waste disposal requirements

Task 101002 – 2026, 2027, and 2028 Annual O&M Inspections Reporting
2026 – TMNTE $1,400
2027 – TMNTE $1,500
2028 – TMNTE $1,600

Olsson will submit deliverables to DWEE and EPA (deadline is June 21st each year), and a summary of the process followed will be sent to the City via email for any internal and external distributions that may be necessary.

Phase 200 – EPA Coordination

Task 200002 – Legal Description Edits Coordination
2026 – TMNTE $1,700

Olsson will coordinate legal description edits for West Haymarket Additions 5/6 based on the email deliverable sent to Client February 20, 2025.

Task 200003 – Survey Legal Description Edits
2026 – TMNTE $5,000

Olsson survey will complete legal description edits for West Haymarket Additions 5/6 based on the email deliverable sent to Client February 20, 2025.

Phase 300 – Pedestrian Bridge Inspections
TMNTE - $16,500

Project will be located at:
West Haymarket Park Pedestrian Bridge
"LINCOLN" Pedestrian Bridge to Pinnacle Bank Arena
Latitude: 40.820058N, Longitude: 96.712542W
Lincoln, Nebraska

Project Description:
The intent of this project is to complete the first 24-month routine inspection since the beginning of the bridge inspection cycle in 2024. The consultant shall complete a Routine inspection of the full bridge, no In-Depth inspection is to be completed this cycle per the 2024 inspection report, and prepare a report of the findings. The report shall be available for use and may be modified at future inspections. The inspection will be of the pedestrian bridge portion only, from the south pier to the north abutment as shown in the figure below. The inspection will include the north MSE wall.



Bridge Inspection Phase Management

- The Roadway and Bridge Task Manager will coordinate with the Project Manager to serve as points of contact for the Bridge Inspection Phase, monitor phase schedule and budget, and coordinate project deliverables.
- Prepare a site-specific safety plan and daily jobsite safety analysis for the inspection.
- The Task Manager shall complete up to two (2) meetings with the Client:
  - One (1) kickoff meeting with the client prior to beginning the inspection to be held virtually, if required.

    - One (1) meeting after inspection is complete and report is submitted to go over the findings to be held virtually.
- Prior to the inspection, information will be collected, organized, and reviewed for the bridge as necessary to complete the inspection. The Client shall supply this information, as requested.
- Notify the Client by email of the inspection schedules a minimum of two (2) weeks in advance of the day(s) the inspector will be on site. This will both serve as an invitation of Client personnel to join the inspection and notification of the Client to clean the bridge and open the fence gates at the abutment.
- Coordinate with Pinnacle Bank Arena staff for use of the parking lots below the bridge for access during the inspection.
- Coordinate with Client and Pinnacle Bank Arena staff to conduct inspections at times which will not interfere with arena events.

Field Inspection

- Mobilize and complete the inspection for the bridge in accordance with the NDOT Bridge Inspection Program (BIP) and NBIS standards, including new Specification for National Bridge Inventory (SNBI) requirements.
- Inspection will be completed by one (1) NBIS certified bridge inspection team leader and one (1) assistant.
- Inspection will be of all elements above the ground line.
- Lighting will be checked before dawn or after dusk.
- Only visual and minor non-destructive evaluation techniques (hammer sounding, dye-penetrant, d- meter) will be used.
- Inspection types shall be a Routine inspection of the full bridge.
- Access equipment: No access equipment shall be used.
- Traffic Control: No traffic control shall be used.
- Railroad Coordination: No railroad coordination will be completed. All elements will be inspected from outside the railroad right-of-way fencing.
- Document the site and defects with digital photos. Defects and other findings shall be placed on to- scale drawings.
- Notify the Client by email of any critical findings – closure requirements, restrictions on use, or other immediate safety concerns – as soon as possible after the inspection.
- Once inspection is complete, and prior to July 31st, notify the Client by email findings that will require maintenance and repair for Client's next fiscal year budgeting purposes.

Inspection Report

- Update 2024 inspection report to include the following:
- Summary of inspection (General procedures for future inspectors understanding)
    - Inspection Team, Date(s), Total Time on Site, Total Equipment Time, Weather Conditions

    - Access and traffic control methods
    - Inspection procedures
    - People to notify and/or coordinate with to complete the inspection.
    - Any safety concerns or unique aspects to the inspection found during the inspection.
    - Inspection frequency recommendations.
- Inspection Findings
- Broken out into bridge elements with associated defect IDs to be built upon at future inspections.
- Inspection Photos
- Update the detailed to-scale CAD (Microstation) drawings mapping out defects and inspection findings with new defects.
- Maintenance/Repair Recommendations
- Provide internal quality control on the inspection report and findings. The quality control will be completed by a separate inspector not on site at the inspection.
- Submit the draft inspection report PDF for client review and discussion.
- Submit the final inspection report, drawings, photos, and any other forms prepared at the time of the inspection to the Client after the report is complete. All data will be submitted electronically. PDF and word/excel documents of all reports will be included for future inspector use to prevent recreation of the documents. The Microstation .dgn file will be submitted for future inspectors to update with new documented findings.
- The Consultant will provide a brief description of their company-wide inspection quality control procedures and inspector certification as an appendix to the report.

Assumptions:

This scope of services for the Bridge Inspections Phase does not include the following tasks:

- Meetings with the Client, other than those shown.
- Non-redundant Steel Tension Member (NSTM), Element, In-Depth, or Underwater Inspections.
- Advanced non-destructive evaluation techniques.
- Cleaning of the bridges for the inspection.
- Delays of inspection schedule or multiple trips out to the bridge due to lack of bridge cleaning by the Client.
- Traffic Control rental or use.
- Access equipment rental or use.
- Any coordination, permitting, or flagging with BNSF. Including any inspection access from BNSF right- of-way.
- Verifying capacity (Load rating) of the bridge due to deterioration.
- Gathering structural measurements to complete a load rating, if necessary.
- Preparation and submittal of a Critical Findings Report (CFR) due to findings that require closure or limitation of access to the bridge.

- Repair procedures or repair plan preparation based on the suggested maintenance or repair notes included in the report.

SCHEDULE FOR BRIDGE INSPECTION SERVICES

- Unless otherwise agreed, Consultant expects to perform its services under the Agreement as follows:
- Field Inspection: By end of July 2026
- Initial Findings Email: By end of July 2026
- Draft Inspection Report: Within 60 days of inspection
- Final Report Submittal: Within 90 days of inspection

Phase 800 – Project Management
Task 800001 – 2026 – Mid 2028 Project Management
2026 – TMNTE $2,500
2027 – TMNTE $1,500
2028 – TMNTE $1,000

Olsson's Project Manager will drive schedule, Client, and regulatory communications; maintain an ongoing list of action items to track overall progress of the Project; and maintain Olsson's Quality Assurance and Quality Control program for proper internal and external review, comment, and coordination of deliverables. Olsson will provide monthly status reports to Client.

Phase 900 – Contingency Phase/On-Call Services
Task 900001 – Contingency Phase/On-Call Services
2026 – TMNTE $15,000
2027 – TMNTE $15,000
2028 – TMNTE $5,000

Includes new activities, or whenever the estimated hours are exceeded for the above activities (i.e., comments from DWEE/EPA, more soil sampling required than planned, etc.).

Should Client request work in addition to the Scope of Services, Olsson shall invoice Client for such additional services (Optional Additional Services) at the standard hourly billing labor rate charged for those employees actually performing the work, plus reimbursable expenses if any. Olsson shall not commence work on Optional Additional Services without Client's prior written approval.

Olsson agrees to provide all of its services in a timely, competent and professional manner, in accordance with applicable standards of care, for projects of similar geographic location, quality and scope.

ENVIRONMENTAL EQUIPMENT BILLING RATE SCHEDULE

Rate Description	Unit	2026 Billing Rate	2027 Billing Rate
2” Weighted Disposable Bailer	Each	$ 27.56	$ 28.94
Generator	Day	$ 137.81	$ 144.70
QED Bladder pump control/compressor	Day	$ 275.63	$ 289.41
Water Quality Meter and Flow Cell	Day	$ 303.19	$ 318.35
pH, conductivity and temperature probe	Day	$ 66.15	$ 69.46
Grundfos (Redi-Flo 2 and Control Box)	Day	$ 192.94	$ 202.58
Soil Sampling Supplies	Sample	$ 11.03	$ 11.58
Groundwater Sampling Supplies	Sample	$ 33.08	$ 34.73
Surface Water Sampler	Day	$ 55.13	$ 57.88
Composite Sampling Supplies	Sample	$ 22.05	$ 23.15
Oil/Water Interface Probe	Day	$ 71.66	$ 75.25
Water Level Indicator (Solinist Model 101)	Day	$ 44.10	$ 46.31
Photo Ionization Detector	Day	$ 137.81	$ 144.70
Hand Held Sub-Meter GPS	Day	$ 209.48	$ 219.95
Water Filter (0.45 micron, disposable)	Day	$ 38.59	$ 40.52
Sub-Slab Vapor Pins	Sample	$ 82.69	$ 86.82
Helium Shroud	Sample	$ 165.38	$ 173.64
Hand Auger	Day	$ 66.15	$ 69.46
Drill with Augers, Hand Auger, Probe	Day	$ 413.44	$ 434.11
Hammer Drill and Bits	Day	$ 165.38	$ 173.64
Disposal soil gas tip	EA	$ 88.20	$ 92.61
Metal Detector	Day	$ 110.25	$ 115.76
2" J Plug with Lock	EA	$ 42.00	$ 44.10
Digital Camera	Day	$ 38.59	$ 40.52

*Rates escalate 5% per year

Olsson Labor Billing Rates
2026

Executive Vice President	$ 473.00
Market Leader	$ 411.00
Discipline/Geography Leader	$ 402.00
Sector Leader	$ 355.00
Technical Expert	$ 309.00
Senior Project Manager	$ 309.00
Client Relationship Manager	$ 309.00
Senior Team Leader	$ 315.00
Client Manager/Group Leader	$ 254.00
Project Manager III	$ 240.00
Project Manager II	$ 210.00
Project Manager I	$ 163.00
Lead Engineer	$ 254.00
Senior Engineer	$ 245.00
Project Engineer	$ 213.00
Engineer	$ 183.00
Associate Engineer	$ 160.00
Assistant Engineer	$ 143.00
Lead Scientist	$ 224.00
Senior Scientist	$ 196.00
Project Scientist	$ 163.00
Scientist	$ 140.00
Associate Scientist	$ 124.00
Assistant Scientist	$ 105.00
Lead Planner	$ 227.00
Senior Planner	$ 203.00
Project Planner	$ 168.00
Planner	$ 149.00
Associate Planner	$ 129.00
Assistant Planner	$ 112.00
Lead Landscape Architect	$ 227.00
Senior Landscape Architect	$ 199.00
Project Landscape Architect	$ 168.00
Landscape Architect	$ 149.00
Associate Landscape Designer	$ 129.00
Assistant Landscape Designer	$ 114.00
Commissioning Manager/Technical Manager	$ 250.00
Commissioning Agent	$ 222.00
Commissioning Senior Technician	$ 189.00
Commissioning AssociateTechnician	$ 159.00
Commissioning Assistant Technician	$ 135.00
Design Manager/Technical Manager	$ 189.00
Design Associate	$ 150.00
Senior Technician	$ 122.00
Associate Technician	$ 105.00
Assistant Technician	$ 91.00
GIS Specialist	$ 212.00
Network Services Senior Specialist	$ 203.00
Stormwater Compliance Leader/Sr Specialist	$ 205.00
Stormwater Compliance Specialist/Sr Coordinator	$ 157.00
Stormwater Compliance Coordinator	$ 124.00
Stormwater Compliance Assistant	$ 100.00
Business Development Leader/Sr Specialist	$ 262.00
Business Development Specialist	$ 203.00
Student Intern - Level 3	$ 114.00
Student Intern - Level 2	$ 98.00
Student Intern - Level 1	$ 82.00
Public Engagement Specialist/Sr Coordinator	$ 140.00

Olsson Labor Billing Rates
2026

Public Engagement Coordinator	$	110.00
Public Engagement Assistant	$	93.00
Administrative Leader	$	177.00
Administrative Sr Specialist/Manager	$	121.00
Administrative Senior Coordinator	$	107.00
Administrative Coordinator II	$	98.00
Administrative Coordinator I	$	80.00
Administrative Assistant	$	70.00
Project Senior Coordinator	$	136.00
Project Coordinator	$	108.00

Note: Olsson's labor rates will increase by 5% on January 1st every year of a multi-year contract

Billing Rate Schedules for Surveying, Construction Administration, Drilling, and Special Inspections/NDT/Materials Testing will be provided as Appendices, as needed.

CERTIFICATE OF LIABILITY INSURANCE

DATE (MM/DD/YYYY): 1/29/2026

THIS CERTIFICATE IS ISSUED AS A MATTER OF INFORMATION ONLY AND CONFERS NO RIGHTS UPON THE CERTIFICATE HOLDER. THIS CERTIFICATE DOES NOT AFFIRMATIVELY OR NEGATIVELY AMEND, EXTEND OR ALTER THE COVERAGE AFFORDED BY THE POLICIES BELOW. THIS CERTIFICATE OF INSURANCE DOES NOT CONSTITUTE A CONTRACT BETWEEN THE ISSUING INSURER(S), AUTHORIZED REPRESENTATIVE OR PRODUCER, AND THE CERTIFICATE HOLDER.

IMPORTANT: If the certificate holder is an ADDITIONAL INSURED, the policy(ies) must have ADDITIONAL INSURED provisions or be endorsed. If SUBROGATION IS WAIVED, subject to the terms and conditions of the policy, certain policies may require an endorsement. A statement on this certificate does not confer rights to the certificate holder in lieu of such endorsement(s).

PRODUCER
HUB International Great Plains LLC
11516 Miracle Hills Drive
Suite 100
Omaha NE 68154

CONTACT NAME: Oscar Chavez-Franco
PHONE (A/C, No, Ext): 402-964-5579 **FAX (A/C, No):**
E-MAIL ADDRESS: oscar.chavezfranco@hubinternational.com

INSURER(S) AFFORDING COVERAGE	NAIC #
INSURER A : Amerisure Mutual Insurance Company	23396
INSURER B : Amerisure Insurance Company	19488
INSURER C : MSIG Specialty Insurance USA Inc	34886
INSURER D : Certain Underwriters at Lloyds	
INSURER E : United States Aircraft Insurance Group (USAIG)	
INSURER F :	

INSURED 5761
Olsson, Inc.
P.O. Box 84608
402-474-6311
Lincoln NE 68501

COVERAGES **CERTIFICATE NUMBER:** 741076767 **REVISION NUMBER:**

THIS IS TO CERTIFY THAT THE POLICIES OF INSURANCE LISTED BELOW HAVE BEEN ISSUED TO THE INSURED NAMED ABOVE FOR THE POLICY PERIOD INDICATED. NOTWITHSTANDING ANY REQUIREMENT, TERM OR CONDITION OF ANY CONTRACT OR OTHER DOCUMENT WITH RESPECT TO WHICH THIS CERTIFICATE MAY BE ISSUED OR MAY PERTAIN, THE INSURANCE AFFORDED BY THE POLICIES DESCRIBED HEREIN IS SUBJECT TO ALL THE TERMS, EXCLUSIONS AND CONDITIONS OF SUCH POLICIES. LIMITS SHOWN MAY HAVE BEEN REDUCED BY PAID CLAIMS.

INSR LTR	TYPE OF INSURANCE	ADDL INSD	SUBR WVD	POLICY NUMBER	POLICY EFF (MM/DD/YYYY)	POLICY EXP (MM/DD/YYYY)	LIMITS	
A	X **COMMERCIAL GENERAL LIABILITY** CLAIMS-MADE [X] OCCUR GEN'L AGGREGATE LIMIT APPLIES PER: POLICY [ ] PRO-JECT [ ] LOC OTHER:	Y	Y	CPP21194510502	1/1/2026	1/1/2027	EACH OCCURRENCE DAMAGE TO RENTED PREMISES (Ea occurrence) MED EXP (Any one person) PERSONAL & ADV INJURY GENERAL AGGREGATE PRODUCTS - COMP/OP AGG	$ 1,000,000 $ 1,000,000 $ 10,000 $ 1,000,000 $ 2,000,000 $ 2,000,000
B	**AUTOMOBILE LIABILITY** X ANY AUTO OWNED AUTOS ONLY [ ] SCHEDULED AUTOS HIRED AUTOS ONLY [ ] NON-OWNED AUTOS ONLY X $0 Ded	Y	Y	CA 21194500501	1/1/2026	1/1/2027	COMBINED SINGLE LIMIT (Ea accident) BODILY INJURY (Per person) BODILY INJURY (Per accident) PROPERTY DAMAGE (Per accident)	$ 1,000,000 $ $ $
A	X **UMBRELLA LIAB** X OCCUR **EXCESS LIAB** [ ] CLAIMS-MADE DED [ ] RETENTION $			CU 21194520402	1/1/2026	1/1/2027	EACH OCCURRENCE AGGREGATE	$ 10,000,000 $ 10,000,000
A	**WORKERS COMPENSATION AND EMPLOYERS' LIABILITY** ANYPROPRIETOR/PARTNER/EXECUTIVE OFFICER/MEMBER EXCLUDED? Y/N: N **(Mandatory in NH)** If yes, describe under DESCRIPTION OF OPERATIONS below	N / A	Y	WC 21194530401	1/1/2026	1/1/2027	X PER STATUTE [ ] OTH-ER E.L. EACH ACCIDENT E.L. DISEASE - EA EMPLOYEE E.L. DISEASE - POLICY LIMIT	 $ 1,000,000 $ 1,000,000 $ 1,000,000
C D E	Professional Liability/E&O Cyber Liability Unmaned Aircraft/Drones		Y	MSTAEC-00049 ACS1469126 UA03562523	1/1/2026 1/1/2026 1/1/2026	1/1/2027 1/1/2027 1/1/2027	PL Each Claim Cyber Each Claim Owned & N-O Liability	5,000,000 5,000,000 10,000,000

DESCRIPTION OF OPERATIONS / LOCATIONS / VEHICLES (ACORD 101, Additional Remarks Schedule, may be attached if more space is required)
City of Lincoln/Lancaster County/Lincoln-Lancaster County Public Building Commission
All carriers listed above have an AM Best Rating of at least A, XV.

RE: Any and All Projects. Certificate Holder is additional insured on a primary basis with respects to General Liability, including completed operations, and Automobile Liability as required by written contract executed prior to loss. A waiver of subrogation is granted in favor of Certificate Holder as regards General Liability, Auto Liability, Workers Compensation, and Cyber Liability as required by written contract executed prior to loss. 30 days notice of cancellation provisions apply as required by written contract. General Liability and Auto Liability deductibles are each $0. Professional Liability policy is claims made with $10,000 deductible per claim. Pollution coverage is included in the Professional Liability policy if it arises out of the negligence of the insured in performing their professional services. General Liability, Auto Liability, and Workers Compensation/Employers Liability are underlying policies of the Umbrella Liability.

CERTIFICATE HOLDER

City of Lincoln-Lancaster County
Lincoln-Lancaster County Public
Building Commission
555 South 10th Street
Lincoln NE 68505

CANCELLATION

SHOULD ANY OF THE ABOVE DESCRIBED POLICIES BE CANCELLED BEFORE THE EXPIRATION DATE THEREOF, NOTICE WILL BE DELIVERED IN ACCORDANCE WITH THE POLICY PROVISIONS.

AUTHORIZED REPRESENTATIVE
Jill Aldridge

© 1988-2015 ACORD CORPORATION. All rights reserved.

THIS ENDORSEMENT CHANGES THE POLICY. PLEASE READ IT CAREFULLY.

CONTRACTOR'S BLANKET ADDITIONAL INSURED ENDORSEMENT – FORM A

This endorsement modifies insurance provided under the following:

COMMERCIAL GENERAL LIABILITY COVERAGE PART

Policy Number CPP2119451050 2	**Agency Number** 0255921	**Policy Effective Date** 01/01/2026
Policy Expiration Date 01/01/2027	**Date** 01/04/2026	**Account Number** 20080965
Named Insured OLSSON INC	**Agency** SILVERSTONE GROUP, LLC	**Issuing Company** AMERISURE MUTUAL INSURANCE COMPANY

1. a. SECTION II - WHO IS AN INSURED is amended to add as an additional insured any person or organization:

(1) Whom you are required to add as an additional insured on this policy under a written contract or written agreement relating to your business; or

(2) Who is named as an additional insured under this policy on a certificate of insurance.

b. The written contract, written agreement, or certificate of insurance must:

(1) Require additional insured status for a time period during the term of this policy; and

(2) Be executed prior to the "bodily injury", "property damage", or "personal and advertising injury" leading to a claim under this policy.

c. If, however:

(1) "Your work" began under a letter of intent or work order; and

(2) The letter of intent or work order led to a written contract or written agreement within 30 days of beginning such work; and

(3) Your customer's customary contracts require persons or organizations to be named as additional insureds;

we will provide additional insured status as specified in this endorsement.

2. The insurance provided under this endorsement is limited as follows:

a. That person or organization is an additional insured only with respect to liability caused, in whole or in part, by:

(1) Premises you:

(a) Own;

(b) Rent;

(c) Lease; or

(d) Occupy;

(2) Ongoing operations performed by you or on your behalf. Ongoing operations does not apply to "bodily injury" or "property damage" occurring after:

Includes copyrighted material of Insurance Services Office, Inc.

(a) All work to be performed by you or on your behalf for the additional insured(s) at the site of the covered operations is complete, including related materials, parts or equipment (other than service, maintenance or repairs); or

(b) That portion of "your work" out of which the injury or damage arises is put to its intended use by any person or organization other than another contractor working for a principal as a part of the same project.

(3) Completed operations coverage, but only if:

(a) The written contract, written agreement, or certificate of insurance requires completed operations coverage or "your work" coverage; and

(b) This coverage part provides coverage for "bodily injury" or "property damage" included within the "products-completed operations hazard".

However, the insurance afforded to such additional insured only applies to the extent permitted by law.

b. If the written contract, written agreement, or certificate of insurance:

(1) Requires "arising out of" language; or

(2) Requires you to provide additional insured coverage to that person or organization by the use of either or both of the following:

(a) Additional Insured – Owners, Lessees or Contractors – Scheduled Person Or Organization endorsement CG 20 10 10 01; or

(b) Additional Insured – Owners, Lessees or Contractors – Completed Operations endorsement CG 20 37 10 01;

then the phrase "caused, in whole or in part, by" in paragraph **2.a.** above is replaced by "arising out of".

c. If the written contract, written agreement, or certificate of insurance requires you to provide additional insured coverage to that person or organization by the use of:

(1) Additional Insured – Owners, Lessees or Contractors – Scheduled Person Or Organization endorsement CG 20 10 07 04 or CG 20 10 04 13; or

(2) Additional Insured – Owners, Lessees or Contractors – Completed Operations endorsement CG 20 37 07 04 or CG 20 37 04 13; or

(3) Both those endorsements with either of those edition dates; or

(4) Either or both of the following:

(a) Additional Insured – Owners, Lessees or Contractors – Scheduled Person Or Organization endorsement CG 20 10 without an edition date specified; or

(b) Additional Insured – Owners, Lessees or Contractors – Completed Operations endorsement CG 20 37 without an edition date specified;

then paragraph **2.a.** above applies.

d. Premises, as respects paragraph **2.a.(1)** above, include common or public areas about such premises if so required in the written contract or written agreement.

e. Additional insured status provided under paragraphs **2.a.(1)(b)** or **2.a.(1)(c)** above does not extend beyond the end of a premises lease or rental agreement.

f. The limits of insurance that apply to the additional insured are the least of those specified in the:

(1) Written contract;

(2) Written agreement;

(3) Certificate of insurance; or

(4) Declarations of this policy.

The limits of insurance are inclusive of and not in addition to the limits of insurance shown in the Declarations.

Includes copyrighted material of Insurance Services Office, Inc.

g. The insurance provided to the additional insured does not apply to "bodily injury", "property damage", or "personal and advertising injury" arising out of an architect's, engineer's, or surveyor's rendering of, or failure to render, any professional services, including but not limited to:

(1) The preparing, approving, or failing to prepare or approve:

(a) Maps;

(b) Drawings;

(c) Opinions;

(d) Reports;

(e) Surveys;

(f) Change orders;

(g) Design specifications; and

(2) Supervisory, inspection, or engineering services.

h. **SECTION IV – COMMERCIAL GENERAL LIABILITY CONDITIONS**, paragraph **4. Other Insurance** is deleted and replaced with the following:

4. Other Insurance.

Coverage provided by this endorsement is excess over any other valid and collectible insurance available to the additional insured whether:

a. Primary;

b. Excess;

c. Contingent; or

d. On any other basis;

but if the written contract, written agreement, or certificate of insurance requires primary and non-contributory coverage, this insurance will be primary and non-contributory relative to other insurance available to the additional insured which covers that person or organization as a Named Insured, and we will not share with that other insurance.

i. If the written contract, written agreement, or certificate of insurance as outlined above requires additional insured status by use of CG 20 10 11 85, then the coverage provided under this CG 70 48 endorsement does not apply except for paragraph **2.h. Other Insurance.** Additional insured status is limited to that provided by CG 20 10 11 85 shown below and paragraph **2.h. Other Insurance** shown above.

ADDITIONAL INSURED - OWNERS, LESSEES OR CONTRACTORS (FORM B)

This endorsement modifies insurance provided under the following:

COMMERCIAL GENERAL LIABILITY COVERAGE PART.

SCHEDULE

Name of Person or Organization: Blanket Where Required by Written Contract, Agreement, or Certificate of Insurance that the terms of CG 20 10 11 85 apply

(If no entry appears above, information required to complete this endorsement will be shown in the Declarations as applicable to this endorsement.)

WHO IS AN INSURED (Section II) is amended to include as an insured the person or organization shown in the Schedule, but only with respect to liability arising out of "your work" for that insured by or for you.

CG 20 10 11 85 Copyright, Insurance Services Office, Inc., 1984

Includes copyrighted material of Insurance Services Office, Inc.

j. The insurance provided by this endorsement does not apply to any premises or work for which the person or organization is specifically listed as an additional insured on another endorsement attached to this policy.

Includes copyrighted material of Insurance Services Office, Inc.

THIS ENDORSEMENT CHANGES THE POLICY. PLEASE READ IT CAREFULLY.

ADDITIONAL INSURED – PRIMARY NON-CONTRIBUTORY COVERAGE

This endorsement modifies insurance provided under the following:

COMMERCIAL GENERAL LIABILITY COVERAGE PART

SECTION IV – COMMERCIAL GENERAL LIABILITY CONDITIONS, paragraph **4. Other Insurance** is amended to add the following:

d. Primary And Non-Contributory Coverage For Additional Insureds When Required By Written Contract, Written Agreement, Or Certificate Of Insurance

When required by:

1. written contract;
2. written agreement; or
3. certificate of insurance;

any additional insured coverage provided under this policy, or by any endorsement to this policy, is primary and non-contributory relative to other insurance available to the additional insured which covers that person or organization as a Named Insured, and we will not seek contribution from that other insurance.

Includes copyrighted material of Insurance Services Office, Inc.

THIS ENDORSEMENT CHANGES THE POLICY. PLEASE READ IT CAREFULLY.

ADVANTAGE
COMMERCIAL AUTOMOBILE BROAD FORM ENDORSEMENT

This endorsement modifies insurance provided under the

BUSINESS AUTO COVERAGE FORM

With respect to coverage provided by this endorsement, the provisions of the Coverage Form apply unless modified by the endorsement.

The premium for this endorsement is $ INCLUDED

1. EXTENDED CANCELLATION CONDITION

COMMON POLICY CONDITIONS - CANCELLATION, Paragraph **A.2.** is replaced by the following:

2. We may cancel this policy by mailing or delivering to the first Named Insured written notice of cancellation at least:

a. 10 days before the effective date of cancellation if we cancel for nonpayment of premium; or

b. 60 days before the effective date of cancellation if we cancel for any other reason.

2. BROAD FORM INSURED

SECTION II - LIABILITY COVERAGE A.1. WHO IS AN INSURED is amended by the addition of the following:

d. Any organization you newly acquire or form, other than a partnership, joint venture or limited liability company, and over which you maintain ownership or a majority interest, will qualify as a Named Insured. However,

(1) Coverage under this provision is afforded only until the end of the policy period;

(2) Coverage does not apply to "accidents" or "loss" that occurred before you acquired or formed the organization; and

(3) Coverage does not apply to an organization that is an "insured" under any other policy or would be an "insured" but for its termination or the exhausting of its limit of insurance.

e. Any "employee" of yours using:

(1) A covered "auto" you do not own, hire or borrow, or a covered "auto" not owned by the "employee" or a member of his or her household, while performing duties related to the conduct of your business or your personal affairs; or

(2) An "auto" hired or rented under a contract or agreement in that "employee's" name, with your permission, while performing duties related to the conduct of your business. However, your "employee" does not qualify as an insured under this paragraph (2) while using a covered "auto" rented from you or from any member of the "employee's" household.

f. Your members, if you are a limited liability company, while using a covered "auto" you do not own, hire, or borrow, while performing duties related to the conduct of your business or your personal affairs.

g. Any person or organization with whom you agree in a written contract, written agreement or permit, to provide insurance such as is afforded under this policy, but only with respect to your covered "autos".

This provision does not apply:

(1) Unless the written contract or agreement is executed or the permit is issued prior to the "bodily injury" or "property damage";

Includes copyrighted material of Insurance Services Office, Inc.

(2) To any person or organization included as an insured by an endorsement or in the Declarations; or

(3) To any lessor of "autos" unless:

(a) The lease agreement requires you to provide direct primary insurance for the lessor;

(b) The "auto" is leased without a driver; and

(c) The lease had not expired.

Leased "autos" covered under this provision will be considered covered "autos" you own and not covered "autos" you hire.

h. Any legally incorporated organization or subsidiary in which you own more than 50% of the voting stock on the effective date of this endorsement.

This provision does not apply to "bodily injury" or "property damage" for which an "insured" is also an insured under any other automobile policy or would be an insured under such a policy, but for its termination or the exhaustion of its limits of insurance, unless such policy was written to apply specifically in excess of this policy.

3. COVERAGE EXTENSIONS - SUPPLEMENTARY PAYMENTS

Under **SECTION II - LIABILITY COVERAGE**, **A.2.a. Supplementary Payments**, paragraphs (2) and (4) are deleted and replaced with the following:

(2) Up to $2500 for the cost of bail bonds (including bonds for related traffic law violations) required because of an "accident" we cover. We do not have to furnish these bonds.

(4) All reasonable expenses incurred by the "insured" at our request, including actual loss of earnings up to $500 a day because of time off from work.

4. AMENDED FELLOW EMPLOYEE EXCLUSION

SECTION II - LIABILITY COVERAGE, B. EXCLUSIONS, paragraph **5. Fellow Employee** is deleted and replaced by the following:

5. Fellow Employee

"Bodily injury" to:

a. Any fellow "employee" of the "insured" arising out of and in the course of the fellow "employee's" employment or while performing duties related to the conduct of your business. However, this exclusion does not apply to your "employees" that are officers, managers, supervisors or above. Coverage is excess over any other collectible insurance.

b. The spouse, child, parent, brother or sister of that fellow "employee" as a consequence of paragraph **a.** above.

5. HIRED AUTO PHYSICAL DAMAGE COVERAGE AND LOSS OF USE EXPENSE

A. Under SECTION III - PHYSICAL DAMAGE COVERAGE, A. COVERAGE, the following is added:

If any of your owned covered "autos" are covered for Physical Damage, we will provide Physical Damage coverage to "autos" that you or your "employees" hire or borrow, under your name or the "employee's" name, for the purpose of doing your work. We will provide coverage equal to the broadest physical damage coverage applicable to any covered "auto" shown in the Declarations, Item Three, Schedule of Covered Autos You Own, or on any endorsements amending this schedule.

B. Under **SECTION III - PHYSICAL DAMAGE COVERAGE, A.4. COVERAGE EXTENSIONS,** paragraph **b. Loss of Use Expenses** is deleted and replaced with the following:

b. Loss Of Use Expenses

For Hired Auto Physical Damage, we will pay expenses for which an "insured" becomes legally responsible to pay for loss of use of a vehicle rented or hired without a driver, under a written rental contract or agreement. We will pay for loss of use expenses if caused by:

Includes copyrighted material of Insurance Services Office, Inc.

(1) Other than collision, only if the Declarations indicate that Comprehensive Coverage is provided for any covered “auto”;

(2) Specified Causes of Loss, only if the Declarations indicate that Specified Causes Of Loss Coverage is provided for any covered “auto”; or

(3) Collision, only if the Declarations indicate that Collision Coverage is provided for any covered “auto”.

However, the most we will pay for any expenses for loss of use is $30 per day, to a maximum of $2,000.

C. Under **SECTION IV – BUSINESS AUTO CONDITIONS**, paragraph **5.b. Other Insurance** is deleted and replaced by the following:

b. For Hired Auto Physical Damage Coverage, the following are deemed to be covered "autos" you own:

1. Any covered "auto" you lease, hire, rent or borrow; and

2. Any covered "auto" hired or rented by your "employee" under a contract in that individual "employee's" name, with your permission, while performing duties related to the conduct of your business.

However, any “auto” that is leased, hired, rented or borrowed with a driver is not a covered “auto”, nor is any “auto” you hire from any of your “employees”, partners (if you are a partnership), members (if you are a limited liability company), or members of their households.

6. LOAN OR LEASE GAP COVERAGE

Under **SECTION III - PHYSICAL DAMAGE COVERAGE, A. COVERAGE**, the following is added:

If a covered “auto” is owned or leased and if we provide Physical Damage Coverage on it, we will pay, in the event of a covered total “loss”, any unpaid amount due on the lease or loan for a covered “auto”, less:

(a) The amount paid under the Physical Damage Coverage Section of the policy; and

(b) Any:

(1) Overdue lease or loan payments including penalties, interest or other charges resulting from overdue payments at the time of the “loss”;

(2) Financial penalties imposed under a lease for excessive use, abnormal wear and tear or high mileage;

(3) Costs for extended warranties, Credit Life Insurance, Health, Accident or Disability Insurance purchased with the loan or lease;

(4) Security deposits not refunded by a lessor; and

(5) Carry-over balances from previous loans or leases.

7. RENTAL REIMBURSEMENT

SECTION III - PHYSICAL DAMAGE COVERAGE, A. COVERAGE, paragraph **4. Coverage Extension**s is deleted and replaced by the following:

4. Coverage Extensions

(a) We will pay up to $75 per day to a maximum of $2000 for transportation expense incurred by you because of covered "loss”. We will pay only for those covered "autos" for which you carry Collision Coverage or either Comprehensive Coverage or Specified Causes of Loss Coverage. We will pay for transportation expenses incurred during the period beginning 24 hours after the covered "loss" and ending, regardless of the policy's expiration, when the covered "auto" is returned to use or we pay for its "loss". This coverage is in addition to the otherwise applicable coverage you have on a covered "auto". No deductibles apply to this coverage.

(b) This coverage does not apply while there is a spare or reserve "auto" available to you for your operation.

Includes copyrighted material of Insurance Services Office, Inc.

8. AIRBAG COVERAGE

SECTION III - PHYSICAL DAMAGE, B. EXCLUSIONS, Paragraph **3**. is deleted and replaced by the following:

We will not pay for "loss" caused by or resulting from any of the following unless caused by other "loss" that is covered by this insurance:

a. Wear and tear, freezing, mechanical or electrical breakdown. However, this exclusion does not include the discharge of an airbag.

b. Blowouts, punctures or other road damage to tires.

9. GLASS REPAIR - WAIVER OF DEDUCTIBLE

SECTION III - PHYSICAL DAMAGE COVERAGE, D. DEDUCTIBLE is amended to add the following:

No deductible applies to glass damage if the glass is repaired rather than replaced.

10. COLLISION COVERAGE – WAIVER OF DEDUCTIBLE

SECTION III - PHYSICAL DAMAGE COVERAGE, D. DEDUCTIBLE is amended to add the following:

When there is a "loss" to your covered "auto" insured for Collision Coverage, no deductible will apply if the "loss" was caused by a collision with another "auto" insured by us.

11. KNOWLEDGE OF ACCIDENT

SECTION IV - BUSINESS AUTO CONDITIONS, A. LOSS CONDITIONS, 2. DUTIES IN THE EVENT OF ACCIDENT, CLAIM, SUIT OR LOSS, paragraph a. is deleted and replaced by the following:

a. You must see to it that we are notified as soon as practicable of an "accident", claim, "suit" or "loss". Knowledge of an "accident", claim, "suit" or "loss" by your "employees" shall not, in itself, constitute knowledge to you unless one of your partners, executive officers, directors, managers, or members (if you are a limited liability company) has knowledge of the "accident", claim, "suit" or "loss". Notice should include:

(1) How, when and where the "accident" or "loss" occurred;

(2) The "insured's" name and address; and

(3) To the extent possible, the names and addresses of any injured persons and witnesses.

12. TRANSFER OF RIGHTS (BLANKET WAIVER OF SUBROGATION)

SECTION IV - BUSINESS AUTO CONDITIONS A.5. TRANSFER OF RIGHTS OF RECOVERY AGAINST OTHERS TO US is deleted and replaced by the following:

If any person or organization to or for whom we make payment under this Coverage Form has rights to recover damages from another, those rights are transferred to us. That person or organization must do everything necessary to secure our rights and must do nothing after "accident" or "loss" to impair them. However, if the insured has waived rights to recover through a written contract, or if your work was commenced under a letter of intent or work order, subject to a subsequent reduction in writing with customers whose customary contracts require a waiver, we waive any right of recovery we may have under this Coverage Form.

13. UNINTENTIONAL FAILURE TO DISCLOSE HAZARDS

SECTION IV - BUSINESS AUTO CONDITIONS, B. GENERAL CONDITIONS, 2. CONCEALMENT, MISREPRESENTATION OR FRAUD is amended by the addition of the following:

We will not deny coverage under this Coverage Form if you unintentionally fail to disclose all hazards existing as of the inception date of this policy. You must report to us any knowledge of an error or omission in your representations as soon as practicable after its discovery. This provision does not affect our right to collect additional premium or exercise our right of cancellation or non-renewal.

Includes copyrighted material of Insurance Services Office, Inc.

14. BLANKET COVERAGE FOR CERTAIN OPERATIONS IN CONNECTION WITH RAILROADS

When required by written contract or written agreement, the definition of “insured contract” is amended as follows:

— The exception contained in paragraph **H.3.** relating to construction or demolition operations on or within 50 feet of a railroad; and

— Paragraph **H.a.**

are deleted with respect to the use of a covered "auto" in operations for, or affecting, a railroad.

Includes copyrighted material of Insurance Services Office, Inc.

THIS ENDORSEMENT CHANGES THE POLICY. PLEASE READ IT CAREFULLY.

NOTICE OF CANCELLATION, NONRENEWAL OR MATERIAL CHANGE – THIRD PARTY

This endorsement modifies insurance provided under the following:

AUTO DEALERS COVERAGE FORM
BUSINESS AUTO COVERAGE FORM
BUSINESS AUTO PHYSICAL DAMAGE COVERAGE FORM
COMMERCIAL GENERAL LIABILITY COVERAGE FORM
COMMERCIAL UMBRELLA LIABILITY COVERAGE FORM
GARAGE COVERAGE FORM
MOTOR CARRIER COVERAGE FORM
PRODUCTS/COMPLETED OPERATIONS LIABILITY COVERAGE FORM
TRUCKERS COVERAGE FORM

Subject to the cancellation provisions of the Coverage Form to which this endorsement is attached, we will not:

1. Cancel;
2. Nonrenew; or,
3. Materially change (reduce or restrict)

this Coverage Form, except for nonpayment of premium, until we provide at least 60 days written notice of such cancellation, nonrenewal or material change. Written notice will be to the person or organization named in the Schedule. Such notice will be by certified mail with return receipt requested.

This notification of cancellation, nonrenewal or material change to the person or organization named in the Schedule is intended as a courtesy only. Our failure to provide such notification will not:

1. Extend any Coverage Form cancellation date;
2. Negate the cancellation as to any insured or any certificate holder;
3. Provide any additional insurance that would not have been provided in the absence of this endorsement; or
4. Impose liability of any kind upon us.

This endorsement does not entitle the person or organization named in the Schedule to any benefits, rights or protection under this Coverage Form.

SCHEDULE

Name Of Person Or Organization	Mailing Address
Any person or organization holding a certificate of insurance issued for you, provided the certificate:	The address shown for that person or organization in that certificate of insurance

1. Refers to this policy;
2. States that notice of:
   a. Cancellation;
   b. Nonrenewal; or
   c. Material change reducing or restricting coverage;

   will be provided to that person or organization;
3. Is in effect at the time of the:
   a. Cancellation;
   b. Nonrenewal; or
   c. Material change reducing or restricting coverage; and
4. Is on file at your agent or broker's office for this policy

Forms and Endorsements Schedule

Policy Number: CPP21194510502 **Effective Date:** 01/01/2026

Named Insured: OLSSON INC

Form Number	Description
COMMON FORMS	
IL 00 03 08 07	CALCULATION OF PREMIUM
IL 00 03 09 08	CALCULATION OF PREMIUMS
IL 00 17 11 98	COMMON POLICY CONDITIONS
IL 00 21 07 02	NUCLEAR ENERGY LIABILITY EXCLUSION ENDORSEMENT (BROAD FORM)
IL 09 85 12 20	DISCLOSURE PURSUANT TO TERRORISM RISK INSURANCE ACT
IL 70 66 07 14	NOTICE OF CANCELLATION, NONRENEWAL OR MATERIAL CHANGE - THIRD PARTY
IL 70 66 07 14-BLK(BLANKET)	NOTICE OF CANCELLATION, NONRENEWAL OR MATERIAL CHANGE - THIRD PARTY
CG 03 00 01 96	DEDUCTIBLE LIABILITY INSURANCE
CG 21 70 01 15	CAP ON LOSSES FROM CERTIFIED ACTS OF TERRORISM
CG 24 53 12 19	WAIVER OF TRANSFER OF RIGHTS OF RECOVERY AGAINST OTHERS TO US
CG P 013 05 09	COMMUNICABLE DISEASE EXCLUSION ENDORSEMENT
CG 70 42 04 03	ASBESTOS EXCLUSION ENDORSEMENT
COMMERCIAL GENERAL LIABILITY	
CG 00 01 04 13	COMMERCIAL GENERAL LIABILITY COVERAGE FORM
CG 21 32 05 09	COMMUNICABLE DISEASE EXCLUSION
CG 21 47 12 07	EMPLOYMENT-RELATED PRACTICES EXCLUSION
CG 21 52 04 13	EXCLUSION - FINANCIAL SERVICES
CG 21 54 12 19	EXCLU-DESIGNATED OPERATIONS COVERED BY A CONTROLLED (WRAP-UP) INSURANCE PROGRAM
CG 21 60 09 98	EXCLUSION - YEAR 2000 COMPUTER-RELATED AND OTHER ELECTRONIC PROBLEMS
CG 21 67 12 04	FUNGI OR BACTERIA EXCLUSION
CG 21 86 12 04	EXCLUSION - EXTERIOR INSULATION AND FINISH SYSTEMS
CG 21 96 03 05	SILICA OR SILICA-RELATED DUST EXCLUSION
CG 22 34 04 13	EXCLUSION - CONSTRUCTION MANAGEMENT ERRORS AND OMISSIONS
CG 22 79 04 13	EXCLUSION - CONTRACTORS - PROFESSIONAL LIABILITY
CG 70 48 10 15	CONTRACTOR'S BLANKET ADDITIONAL INSURED ENDORSEMENT - FORM A
CG 70 49 04 17	CONTRACTORS GENERAL LIABILITY EXTENSION ENDORSEMENT
CG 70 50 11 09	LIMITED POLLUTION REIMBURSEMENT - "WORK SITES"
CG 71 06 10 99	AMENDMENT OF COMMERCIAL GENERAL LIABILITY CONDITIONS NOTICE AND TENDER TO OTHER
CG 71 17 01 01	EXCLUSION - LEAD POISONING OR CONTAMINATION
CG 71 34 04 05	BODILY INJURY DEFINITION MODIFICATION
CG 71 39 12 05	COVERAGE FOR INJURY TO CO-EMPLOYEE(S)
CG 71 52 06 18	EXCLUSION-CONTROLLED INSURANCE PROGRAM WITH RESIDUAL COVERAGE EXCEPTION
CG 71 55 02 14	ELECTRONIC DATA LIABILITY
CG 71 66 08 11	TOTAL POLLUTION EXCLUSION WITH EXCEPTIONS FOR BUILDING HEAT, COOLING AND DEHUMD
CG 72 13 08 11	ADDITIONAL INS-PRIMARY NON-CONTRIB COV WHEN REQ BY WRITTEN CONT, WRITTEN AGREE
CG 72 13 06 18	ADDITIONAL INSURED - PRIMARY NON-CONTRIBUTORY COVERAGE
EMPLOYEE BENEFITS LIABILITY	
EB 70 01 11 97	EMPLOYEE BENEFITS LIABILITY COVERAGE FORM
EB 73 07 03 09	RETROACTIVE COVERAGE PERIOD ENDORSEMENT
EB 73 07 06 10	RETROACTIVE COVERAGE PERIOD ENDORSEMENT

POLICY NUMBER: CA 21194500501

COMMERCIAL AUTO
CA 71 65 09 11

THIS ENDORSEMENT CHANGES THE POLICY. PLEASE READ IT CAREFULLY.

DESIGNATED INSURED - PRIMARY NON-CONTRIBUTORY COVERAGE WHEN REQUIRED BY INSURED CONTRACT OR CERTIFICATE

This endorsement modifies insurance provided under the

BUSINESS AUTO COVERAGE FORM

The provisions of the Coverage Form apply unless changed by this endorsement.

This endorsement identifies person(s) or organization(s) who are "insured" under the Who Is An Insured Provision of the Coverage Form.

This endorsement changes the policy on the inception date of the policy, unless another date is shown below.

Endorsement Effective: 01/01/2026	Countersigned By:
Named Insured: OLSSON INC	(Authorized Representative)

(No entry may appear above. If so, information to complete this endorsement is in the Declarations.)

1. Section II – Liability Coverage, A. Coverage, 1. Who Is An Insured is amended to add:

   Any person or organization with whom you have an "insured contract" which requires:

   i. that person or organization to be added as an "insured" under this policy or on a certificate of insurance; and
   ii. this policy to be primary and non-contributory to any like insurance available to the person or organization.

Each such person or organization is an "insured" for Liability Coverage. They are an "insured" only if that person or organization is an "insured" under in **SECTION II** of the Coverage Form.

The contract between the Named Insured and the person or organization is an "insured contract".

2. Section IV – Business Auto Conditions, B. General Conditions, 5. Other Insurance, paragraph d. is deleted and replaced by the following for the purpose of this endorsement only:

   d. When coverage provided under this Coverage Form is also provided under another Coverage Form or policy, we will provide coverage on a primary, non-contributory basis.

Includes copyrighted material of Insurance Services Office, Inc. with its permission.

CA 21194500501

THIS ENDORSEMENT CHANGES THE POLICY. PLEASE READ IT CAREFULLY.

NOTICE OF CANCELLATION, NONRENEWAL OR MATERIAL CHANGE – THIRD PARTY

This endorsement modifies insurance provided under the following:

AUTO DEALERS COVERAGE FORM
BUSINESS AUTO COVERAGE FORM
BUSINESS AUTO PHYSICAL DAMAGE COVERAGE FORM
COMMERCIAL GENERAL LIABILITY COVERAGE FORM
COMMERCIAL UMBRELLA LIABILITY COVERAGE FORM
GARAGE COVERAGE FORM
MOTOR CARRIER COVERAGE FORM
PRODUCTS/COMPLETED OPERATIONS LIABILITY COVERAGE FORM
TRUCKERS COVERAGE FORM

Subject to the cancellation provisions of the Coverage Form to which this endorsement is attached, we will not:

1. Cancel;
2. Nonrenew; or,
3. Materially change (reduce or restrict)

this Coverage Form, except for nonpayment of premium, until we provide at least 60 days written notice of such cancellation, nonrenewal or material change. Written notice will be to the person or organization named in the Schedule. Such notice will be by certified mail with return receipt requested.

This notification of cancellation, nonrenewal or material change to the person or organization named in the Schedule is intended as a courtesy only. Our failure to provide such notification will not:

1. Extend any Coverage Form cancellation date;
2. Negate the cancellation as to any insured or any certificate holder;
3. Provide any additional insurance that would not have been provided in the absence of this endorsement; or
4. Impose liability of any kind upon us.

This endorsement does not entitle the person or organization named in the Schedule to any benefits, rights or protection under this Coverage Form.

SCHEDULE

Name Of Person Or Organization	Mailing Address
Any person or organization holding a certificate of insurance issued for you, provided the certificate:	The address shown for that person or organization in that certificate of insurance

1. Refers to this policy;
2. States that notice of:
   a. Cancellation;
   b. Nonrenewal; or
   c. Material change reducing or restricting coverage;

   will be provided to that person or organization;
3. Is in effect at the time of the:
   a. Cancellation;
   b. Nonrenewal; or
   c. Material change reducing or restricting coverage; and
4. Is on file at your agent or broker's office for this policy

THIS ENDORSEMENT CHANGES THE POLICY. PLEASE READ IT CAREFULLY.

ADVANTAGE
COMMERCIAL AUTOMOBILE BROAD FORM ENDORSEMENT

This endorsement modifies insurance provided under the

BUSINESS AUTO COVERAGE FORM

With respect to coverage provided by this endorsement, the provisions of the Coverage Form apply unless modified by the endorsement.

The premium for this endorsement is $ INCLUDED

1. EXTENDED CANCELLATION CONDITION

COMMON POLICY CONDITIONS - CANCELLATION, Paragraph **A.2.** is replaced by the following:

2. We may cancel this policy by mailing or delivering to the first Named Insured written notice of cancellation at least:

a. 10 days before the effective date of cancellation if we cancel for nonpayment of premium; or

b. 60 days before the effective date of cancellation if we cancel for any other reason.

2. BROAD FORM INSURED

SECTION II - LIABILITY COVERAGE A.1. WHO IS AN INSURED is amended by the addition of the following:

d. Any organization you newly acquire or form, other than a partnership, joint venture or limited liability company, and over which you maintain ownership or a majority interest, will qualify as a Named Insured. However,

(1) Coverage under this provision is afforded only until the end of the policy period;

(2) Coverage does not apply to "accidents" or "loss" that occurred before you acquired or formed the organization; and

(3) Coverage does not apply to an organization that is an "insured" under any other policy or would be an "insured" but for its termination or the exhausting of its limit of insurance.

e. Any "employee" of yours using:

(1) A covered "auto" you do not own, hire or borrow, or a covered "auto" not owned by the "employee" or a member of his or her household, while performing duties related to the conduct of your business or your personal affairs; or

(2) An "auto" hired or rented under a contract or agreement in that "employee's" name, with your permission, while performing duties related to the conduct of your business. However, your "employee" does not qualify as an insured under this paragraph (2) while using a covered "auto" rented from you or from any member of the "employee's" household.

f. Your members, if you are a limited liability company, while using a covered "auto" you do not own, hire, or borrow, while performing duties related to the conduct of your business or your personal affairs.

g. Any person or organization with whom you agree in a written contract, written agreement or permit, to provide insurance such as is afforded under this policy, but only with respect to your covered "autos".

This provision does not apply:

(1) Unless the written contract or agreement is executed or the permit is issued prior to the "bodily injury" or "property damage";

Includes copyrighted material of Insurance Services Office, Inc.

(2) To any person or organization included as an insured by an endorsement or in the Declarations; or

(3) To any lessor of "autos" unless:

(a) The lease agreement requires you to provide direct primary insurance for the lessor;

(b) The "auto" is leased without a driver; and

(c) The lease had not expired.

Leased "autos" covered under this provision will be considered covered "autos" you own and not covered "autos" you hire.

h. Any legally incorporated organization or subsidiary in which you own more than 50% of the voting stock on the effective date of this endorsement.

This provision does not apply to "bodily injury" or "property damage" for which an "insured" is also an insured under any other automobile policy or would be an insured under such a policy, but for its termination or the exhaustion of its limits of insurance, unless such policy was written to apply specifically in excess of this policy.

3. COVERAGE EXTENSIONS - SUPPLEMENTARY PAYMENTS

Under **SECTION II - LIABILITY COVERAGE**, **A.2.a. Supplementary Payments**, paragraphs (2) and (4) are deleted and replaced with the following:

(2) Up to $2500 for the cost of bail bonds (including bonds for related traffic law violations) required because of an "accident" we cover. We do not have to furnish these bonds.

(4) All reasonable expenses incurred by the "insured" at our request, including actual loss of earnings up to $500 a day because of time off from work.

4. AMENDED FELLOW EMPLOYEE EXCLUSION

SECTION II - LIABILITY COVERAGE, B. EXCLUSIONS, paragraph **5. Fellow Employee** is deleted and replaced by the following:

5. Fellow Employee

"Bodily injury" to:

a. Any fellow "employee" of the "insured" arising out of and in the course of the fellow "employee's" employment or while performing duties related to the conduct of your business. However, this exclusion does not apply to your "employees" that are officers, managers, supervisors or above. Coverage is excess over any other collectible insurance.

b. The spouse, child, parent, brother or sister of that fellow "employee" as a consequence of paragraph **a.** above.

5. HIRED AUTO PHYSICAL DAMAGE COVERAGE AND LOSS OF USE EXPENSE

A. Under SECTION III - PHYSICAL DAMAGE COVERAGE, A. COVERAGE, the following is added:

If any of your owned covered "autos" are covered for Physical Damage, we will provide Physical Damage coverage to "autos" that you or your "employees" hire or borrow, under your name or the "employee's" name, for the purpose of doing your work. We will provide coverage equal to the broadest physical damage coverage applicable to any covered "auto" shown in the Declarations, Item Three, Schedule of Covered Autos You Own, or on any endorsements amending this schedule.

B. Under **SECTION III - PHYSICAL DAMAGE COVERAGE, A.4. COVERAGE EXTENSIONS,** paragraph **b. Loss of Use Expenses** is deleted and replaced with the following:

b. Loss Of Use Expenses

For Hired Auto Physical Damage, we will pay expenses for which an "insured" becomes legally responsible to pay for loss of use of a vehicle rented or hired without a driver, under a written rental contract or agreement. We will pay for loss of use expenses if caused by:

Includes copyrighted material of Insurance Services Office, Inc.

(1) Other than collision, only if the Declarations indicate that Comprehensive Coverage is provided for any covered “auto”;

(2) Specified Causes of Loss, only if the Declarations indicate that Specified Causes Of Loss Coverage is provided for any covered “auto”; or

(3) Collision, only if the Declarations indicate that Collision Coverage is provided for any covered “auto”.

However, the most we will pay for any expenses for loss of use is $30 per day, to a maximum of $2,000.

C. Under **SECTION IV – BUSINESS AUTO CONDITIONS**, paragraph **5.b. Other Insurance** is deleted and replaced by the following:

b. For Hired Auto Physical Damage Coverage, the following are deemed to be covered "autos" you own:

1. Any covered "auto" you lease, hire, rent or borrow; and

2. Any covered "auto" hired or rented by your "employee" under a contract in that individual "employee's" name, with your permission, while performing duties related to the conduct of your business.

However, any “auto” that is leased, hired, rented or borrowed with a driver is not a covered “auto”, nor is any “auto” you hire from any of your “employees”, partners (if you are a partnership), members (if you are a limited liability company), or members of their households.

6. LOAN OR LEASE GAP COVERAGE

Under **SECTION III - PHYSICAL DAMAGE COVERAGE, A. COVERAGE**, the following is added:

If a covered “auto” is owned or leased and if we provide Physical Damage Coverage on it, we will pay, in the event of a covered total “loss”, any unpaid amount due on the lease or loan for a covered “auto”, less:

(a) The amount paid under the Physical Damage Coverage Section of the policy; and

(b) Any:

(1) Overdue lease or loan payments including penalties, interest or other charges resulting from overdue payments at the time of the “loss”;

(2) Financial penalties imposed under a lease for excessive use, abnormal wear and tear or high mileage;

(3) Costs for extended warranties, Credit Life Insurance, Health, Accident or Disability Insurance purchased with the loan or lease;

(4) Security deposits not refunded by a lessor; and

(5) Carry-over balances from previous loans or leases.

7. RENTAL REIMBURSEMENT

SECTION III - PHYSICAL DAMAGE COVERAGE, A. COVERAGE, paragraph **4. Coverage Extension**s is deleted and replaced by the following:

4. Coverage Extensions

(a) We will pay up to $75 per day to a maximum of $2000 for transportation expense incurred by you because of covered "loss”. We will pay only for those covered "autos" for which you carry Collision Coverage or either Comprehensive Coverage or Specified Causes of Loss Coverage. We will pay for transportation expenses incurred during the period beginning 24 hours after the covered "loss" and ending, regardless of the policy's expiration, when the covered "auto" is returned to use or we pay for its "loss". This coverage is in addition to the otherwise applicable coverage you have on a covered "auto". No deductibles apply to this coverage.

(b) This coverage does not apply while there is a spare or reserve "auto" available to you for your operation.

Includes copyrighted material of Insurance Services Office, Inc.

8. AIRBAG COVERAGE

SECTION III - PHYSICAL DAMAGE, B. EXCLUSIONS, Paragraph **3**. is deleted and replaced by the following:

We will not pay for "loss" caused by or resulting from any of the following unless caused by other "loss" that is covered by this insurance:

a. Wear and tear, freezing, mechanical or electrical breakdown. However, this exclusion does not include the discharge of an airbag.

b. Blowouts, punctures or other road damage to tires.

9. GLASS REPAIR - WAIVER OF DEDUCTIBLE

SECTION III - PHYSICAL DAMAGE COVERAGE, D. DEDUCTIBLE is amended to add the following:

No deductible applies to glass damage if the glass is repaired rather than replaced.

10. COLLISION COVERAGE – WAIVER OF DEDUCTIBLE

SECTION III - PHYSICAL DAMAGE COVERAGE, D. DEDUCTIBLE is amended to add the following:

When there is a "loss" to your covered "auto" insured for Collision Coverage, no deductible will apply if the "loss" was caused by a collision with another "auto" insured by us.

11. KNOWLEDGE OF ACCIDENT

SECTION IV - BUSINESS AUTO CONDITIONS, A. LOSS CONDITIONS, 2. DUTIES IN THE EVENT OF ACCIDENT, CLAIM, SUIT OR LOSS, paragraph a. is deleted and replaced by the following:

a. You must see to it that we are notified as soon as practicable of an "accident", claim, "suit" or "loss". Knowledge of an "accident", claim, "suit" or "loss" by your "employees" shall not, in itself, constitute knowledge to you unless one of your partners, executive officers, directors, managers, or members (if you are a limited liability company) has knowledge of the "accident", claim, "suit" or "loss". Notice should include:

(1) How, when and where the "accident" or "loss" occurred;

(2) The "insured's" name and address; and

(3) To the extent possible, the names and addresses of any injured persons and witnesses.

12. TRANSFER OF RIGHTS (BLANKET WAIVER OF SUBROGATION)

SECTION IV - BUSINESS AUTO CONDITIONS A.5. TRANSFER OF RIGHTS OF RECOVERY AGAINST OTHERS TO US is deleted and replaced by the following:

If any person or organization to or for whom we make payment under this Coverage Form has rights to recover damages from another, those rights are transferred to us. That person or organization must do everything necessary to secure our rights and must do nothing after "accident" or "loss" to impair them. However, if the insured has waived rights to recover through a written contract, or if your work was commenced under a letter of intent or work order, subject to a subsequent reduction in writing with customers whose customary contracts require a waiver, we waive any right of recovery we may have under this Coverage Form.

13. UNINTENTIONAL FAILURE TO DISCLOSE HAZARDS

SECTION IV - BUSINESS AUTO CONDITIONS, B. GENERAL CONDITIONS, 2. CONCEALMENT, MISREPRESENTATION OR FRAUD is amended by the addition of the following:

We will not deny coverage under this Coverage Form if you unintentionally fail to disclose all hazards existing as of the inception date of this policy. You must report to us any knowledge of an error or omission in your representations as soon as practicable after its discovery. This provision does not affect our right to collect additional premium or exercise our right of cancellation or non-renewal.

Includes copyrighted material of Insurance Services Office, Inc.

14. BLANKET COVERAGE FOR CERTAIN OPERATIONS IN CONNECTION WITH RAILROADS

When required by written contract or written agreement, the definition of “insured contract” is amended as follows:

— The exception contained in paragraph **H.3.** relating to construction or demolition operations on or within 50 feet of a railroad; and

— Paragraph **H.a.**

are deleted with respect to the use of a covered "auto" in operations for, or affecting, a railroad.

Includes copyrighted material of Insurance Services Office, Inc.

Forms and Endorsements Schedule

Policy Number: CA 21194500501 **Effective Date:** 01/01/2026

Named Insured: OLSSON INC

Form Number	Description
A 40 10 05 20	TEXAS IMPORTANT NOTICE
MCS-90 10 20	ENDORSEMENT FOR MOTOR CARRIER
A 42 00 AR 07 20	NOTICE
AN 13 03 12 12	POLICY FORM INDEX (CA 00 01)
AN 13 10 07 19	MOTOR VEHICLE CRIME PREVENTION AUTHORITY (MVCPA)
AN 12 70 02 08	COMPOSITE RATING NOTICE
M 10 89 01 21	AIC SIGNATURE PAGE
M 11 06 01 21	AIC SIGNATURE PAGE
IL 00 17 11 98	COMMON POLICY CONDITIONS
IL 00 21 05 02	NUCLEAR ENERGY LIABILITY EXCLUSION ENDORSEMENT (BROAD FORM)
IL 00 21 09 08	NUCLEAR ENERGY LIABILITY EXCLUSION ENDORSEMENT (BROAD FORM)
IL 01 25 11 13	COLORADO CHANGES - CIVIL UNION
IL 01 69 09 07	COLORADO CHANGES - CONCEALMENT, MISREPRESENTATION OR FRAUD
IL 01 77 10 10	OKLAHOMA CHANGES - CONCEALMENT, MISREPRESENTATION OR FRAUD
IL 01 79 10 02	OKLAHOMA NOTICE
IL 02 28 09 07	COLORADO CHANGES - CANCELLATION AND NONRENEWAL
IL 02 31 10 22	ARKANSAS CHANGES - CANCELLATION AND NONRENEWAL
IL 02 36 09 07	OKLAHOMA CHANGES - CANCELLATION AND NONRENEWAL
IL 02 76 09 08	IOWA CHANGES - CANCELLATION AND NONRENEWAL
IL 09 09 03 98	ARKANSAS NOTICE
IL N 020 09 03	COLORADO FRAUD STATEMENT
IL 70 66 07 14	NOTICE OF CANCELLATION, NONRENEWAL OR MATERIAL CHANGE - THIRD PARTY
IL 70 66 07 14-BLK(BLANKET)	NOTICE OF CANCELLATION, NONRENEWAL OR MATERIAL CHANGE - THIRD PARTY
CA 00 01 11 20	BUSINESS AUTO COVERAGE FORM
CA 00 43 03 03	KANSAS WAR EXCLUSION
CA 01 13 10 13	COLORADO CHANGES
CA 01 22 06 19	KANSAS CHANGES
CA 01 28 01 21	FLORIDA CHANGES
CA 01 32 10 13	OKLAHOMA CHANGES
CA 01 56 11 13	NEBRASKA CHANGES
CA 01 60 10 13	IOWA CHANGES
CA 01 62 10 13	ARKANSAS CHANGES
CA 01 65 07 16	MISSOURI CHANGES
CA 01 66 10 13	MISSOURI CHANGES - POLLUTION EXCLUSION
CA 01 75 10 13	ARIZONA CHANGES
CA 01 96 11 20	TEXAS CHANGES
CA 02 05 05 14	ARIZONA CHANGES - NONRENEWAL
CA 02 19 01 16	MISSOURI CHANGES - CANCELLATION AND NONRENEWAL
CA 02 21 12 17	NEBRASKA CHANGES - CANCELLATION
CA 02 43 11 13	TEXAS CHANGES - CANCELLATION AND NONRENEWAL
CA 02 65 01 16	KANSAS CHANGES - CANCELLATION AND NONRENEWAL
CA 02 67 01 21	FLORIDA CHANGES - CANCELLATION AND NONRENEWAL
CA 04 40 10 13	COLORADO AUTO MEDICAL PAYMENTS COVERAGE
CA 04 48 12 10	KANSAS COMMERCIAL AUTO COVERAGE CHANGES
CA 05 04 02 21	FL PUBLIC OR LIVERY PSNGR CONV, TRANSPORT NETWORK & ON-DEMAND DELIVERY SVCS EXCL
CA 05 06 11 20	TX PUBLIC OR LIVERY PASSENGER CONVEYANCE AND ON-DEMAND DELIVERY SERVICE EXCL
CA 20 55 10 13	FELLOW EMPLOYEE COVERAGE
CA 21 04 10 13	MISSOURI UNINSURED MOTORISTS COVERAGE
CA 21 08 11 18	ARKANSAS UNINSURED MOTORISTS COVERAGE
CA 21 09 10 13	TEXAS UNINSURED/UNDERINSURED MOTORISTS COVERAGE
CA 21 12 10 13	IOWA UNINSURED AND UNDERINSURED MOTORISTS COVERAGE
CA 21 18 11 15	OKLAHOMA UNINSURED MOTORIST COVERAGE - STACKED
CA 21 37 02 20	KANSAS UNINSURED MOTORISTS COVERAGE
CA 21 39 10 13	ARIZONA UNINSURED MOTORISTS COVERAGE
CA 21 40 10 13	ARIZONA UNDERINSURED MOTORISTS COVERAGE
CA 21 50 07 17	COLORADO UNINSURED MOTORISTS COVERAGE - BODILY INJURY
CA 21 70 10 13	NEBRASKA UNINSURED AND UNDERINSURED MOTORISTS COVERAGE
CA 21 72 06 17	FLORIDA UNINSURED MOTORISTS COVERAGE - NONSTACKED
CA 22 10 01 21	FLORIDA PERSONAL INJURY PROTECTION

Forms and Endorsements Schedule

Policy Number: CA 21194500501 **Effective Date:** 01/01/2026

Named Insured: OLSSON INC

Form Number	Description
CA 22 14 10 13	KANSAS PERSONAL INJURY PROTECTION
CA 22 64 10 13	TEXAS PERSONAL INJURY PROTECTION ENDORSEMENT
CA 23 45 11 20	PUBLIC OR LIVERY PASSENGER CONVEYANCE AND ON-DEMAND DELIVERY SERVICES EXCLUSION
CA 31 04 02 18	MISSOURI UNDERINSURED MOTORISTS COVERAGE
CA 31 28 11 18	ARKANSAS UNDERINSURED MOTORISTS COVERAGE
CA 71 15 11 09	ADVANTAGE COMMERCIAL AUTOMOBILE BROAD FORM ENDORSEMENT
CA 71 17 02 12	FUEL OR LUBRICANT POLLUTION INCIDENT AUTOMOBILE LIABILITY REIMBURSEMENT COVERAGE
CA 71 18 11 09	TEXAS ADVANTAGE COMMERCIAL AUTOMOBILE BROAD FORM ENDORSEMENT
CA 71 41 11 11	BODILY INJURY DEFINITION MODIFICATION
CA 71 41 06 13	BODILY INJURY DEFINITION MODIFICATION
CA 71 65 09 11	DESIGNATED INSURED-PRIMARY NON-CONTRIB COV WHEN REQ BY INSURED CONTRACT OR CERT
CA 71 71 05 08	FLORIDA ADVANTAGE COMMERCIAL AUTOMOBILE BROAD FORM ENDORSEMENT
CA 71 78 11 09	KANSAS ADVANTAGE COMMERCIAL AUTOMOBILE BROAD FORM ENDORSEMENT
CA 99 03 10 13	AUTO MEDICAL PAYMENTS COVERAGE
CA 99 35 11 13	NEBRASKA AUTO MEDICAL PAYMENTS COVERAGE
CA 99 95 10 13	TEXAS SUPPLEMENTARY DEATH BENEFIT
A 37 10 08 98	ARKANSAS CHANGES
AN 10960903	NOTICE TO POLICYHOLDERS REGARDING FLORIDA PIP DEDUCTIBLES

WAIVER OF OUR RIGHT TO RECOVER FROM OTHERS ENDORSEMENT

We have the right to recover our payments from anyone liable for an injury covered by this policy. We will not enforce our right against the person or organization named in the Schedule. (This agreement applies only to the extent that you perform work under a written contract that requires you to obtain this agreement from us.)

This agreement shall not operate directly or indirectly to benefit anyone not named in the Schedule.

Schedule

"Any person or organization required by written contract or certificate of insurance."

"This endorsement is not applicable in California, Kentucky, New Hampshire, New Jersey, Texas and Utah."

The endorsement does not apply to policies or exposure in Missouri where the employer is in the construction group of classifications. According to Section 287.150(6) of the Missouri statutes, a contractual provision purporting to waive subrogation rights is against public policy and void where one party to the contract is an employer in the construction group of code classifications. For policies or exposure in Missouri, the following must be included in the Schedule:

- Any person or organization for which the employer has agreed by written contract, executed prior to loss, may execute a waiver of subrogation. However, for purposes of work performed by the employer in Missouri, this waiver of subrogation does not apply to any construction group of classifications as designated by the waiver of right to recover from others (subrogation) rule in our manual.

This endorsement changes the policy to which it is attached and is effective on the date issued unless otherwise stated.
(The information below is required only when this endorsement is issued subsequent to preparation of the policy.)

Endorsement Effective 01/01/2026 Policy No. WC21194530401 Endorsement No. 0

Insured Olsson, Inc Premium $

Insurance Company Amerisure Insurance Company Countersigned by _____

Copyright 1983 National Council on Compensation Insurance.
Hart Forms & Services
Reorder No. 14-4888

AMERISURE INSURANCE COMPANY

NCCI Code No. 11525

WORKERS' COMPENSATION AND EMPLOYERS' LIABILITY

INFORMATION PAGE

Issuing Office
ST LOUIS BRANCH

POLICY NUMBER	Renewal of	Agent	Producer
WC 21194530401	WC 21194530301	0255921	SILVERSTONE GROUP, LLC

Item 1. Name of Insured and Address

OLSSON INC
601 P STREET
SUITE 200
LINCOLN, NE 68508

___ Individual ___ Partnership
_X_ Corporation or _____

FEIN 470781766
INTRA NO.
INTER NO. 917031843
CUSTOMER NO. 20080965
GROUP:

POLICY PAGE 97

** EXTENSION OF INFORMATION PAGE - ITEM 3D **
** ENDORSEMENT SCHEDULE **

SCHEDULE PAGE 6

STATE	NUMBER	DESCRIPTION	EDITION DATE
	WC 99 06 13	AMENDATORY ENDORSEMENT	10/01/2000
OR	WC 99 06 31	AIC SIGNATURE PAGE	01/01/2015
	WC 99 06 45	NOTICE OF CANCELLATION OR NONRENEWAL - THIRD PARTY	07/01/2014
	WC 99 06 45-BLK	(BLANKET)NOTICE OF CANCELLATION OR NONRENEWAL - THIRD PARTY	07/01/2014
	WC 99 06 45-BLK	(BLANKET)NOTICE OF CANCELLATION OR NONRENEWAL - THIRD PARTY	07/01/2014
CO	WC 99 45 10	COLORADO - CIVIL UNION	09/01/2013

AMERISURE INSURANCE COMPANY

NCCI Code No. 11525

WORKERS' COMPENSATION AND EMPLOYERS' LIABILITY

INFORMATION PAGE

Issuing Office
ST LOUIS BRANCH

POLICY NUMBER	Renewal of	Agent	Producer
WC 21194530401	WC 21194530301	0255921	SILVERSTONE GROUP, LLC

Item 1. Name of Insured and Address

OLSSON INC
601 P STREET
SUITE 200
LINCOLN, NE 68508

___ Individual ___ Partnership
_X_ Corporation or _____

FEIN 470781766
INTRA NO.
INTER NO. 917031843
CUSTOMER NO. 20080965
GROUP:

POLICY PAGE 92

** EXTENSION OF INFORMATION PAGE - ITEM 3D **
** ENDORSEMENT SCHEDULE **

SCHEDULE PAGE 1

STATE	NUMBER	DESCRIPTION	EDITION DATE
	A 50 00 07 09	AMERISURE INSURANCE COMPANY - PARTICIPATION	07/01/2009
AR	A 60 04 02 06	ACCIDENT PREVENTION SERVICES REQUIRED WC POLICY NOTIFICATION	02/01/2006
MI	IL 70 62 05 11	MICHIGAN EXEMPT POLICYHOLDER ENDORSEMENT	05/01/2011
	M 11 06 07 09	AMERISURE INSURANCE COMPANY - SIGNATURE PAGE	07/01/2009
	WC 00 00 00C	WORKERS COMPENSATION AND EMPLOYERS LIABILITY INSURANCE POLICY	01/01/2015
	WC 00 01 06A	LONGSHORE AND HARBOR WORKERS' COMPENSATION ACT COVERAGE ENDORSEMENT	04/01/1992
	WC 00 03 02	DESIGNATED WORKPLACES EXCLUSION ENDORSEMENT	04/01/1984
	WC 00 03 03C	EMPLOYERS LIABILITY COVERAGE ENDORSEMENT	10/01/2004
	WC 00 03 11A	VOLUNTARY COMPENSATION AND EMPLOYERS LIABILITY COVERAGE ENDORSEMENT	08/01/1991
	WC 00 03 13	WAIVER OF OUR RIGHT TO RECOVER FROM OTHERS ENDORSEMENT	04/01/1984
	WC 00 04 03	EXPERIENCE RATING MODIFICATION FACTOR ENDORSEMENT	04/01/1984
	WC 00 04 04	PENDING RATE CHANGE ENDORSEMENT	04/01/1984
	WC 00 04 06	PREMIUM DISCOUNT ENDORSEMENT	08/01/1984
	WC 00 04 06A	PREMIUM DISCOUNT ENDORSEMENT	07/01/1995
	WC 00 04 14	NOTIFICATION OF CHANGE IN OWNERSHIP ENDORSEMENT	07/01/1990
	WC 00 04 14A	NOTIFICATION OF CHANGE IN OWNERSHIP ENDORSEMENT	01/01/2019

Declarations

General Information

Named Insured:	North Haven Red Parent, Inc. Olsson, Inc. 601 P Street, Suite 200 Lincoln, NE 68508
Insurer:	Certain Underwriters at Lloyd's London and other insurers (Please refer to Security Schedule Endt. for details)
Ambridge Admin Fee:	$500
24/7 Breach Hotline:	+1-888-478-1112
Notice of Claim, Circumstance or Loss:	Ambridge Partners LLC: ~~cyberclaims@ambridge-group.com~~
Service of Suit:	**Lloyd's America, Inc.** Attention: Legal Department 280 Park Avenue, East Tower, 25th Floor New York, NY 10017 **Endurance Worldwide Insurance Limited** John Dearie at Locke Lord LLP Brookfield Place, 200 Vesey Street, 20th Floor New York, NY 10281-2101

Policy Information

Policy Period:	From: 01-JAN-2026 To: 01-JAN-2027 Both at 12:01am Local Time at the Named Insured address above
Policy Number:	ACS1469126 **Renewal of:** ACS1371125
Policy Form:	Ambridge Cyber Secure - ACS40020721
Choice of Law:	New York
Continuity Date:	01-JAN-2022
Extended Reporting Period:	100% of the annual premium for 12 months 175% of the annual premium for 24 months 225% of the annual premium for 36 months
Administration Fee:	$500
Premium:	$44,500
Total Payable:	$45,000

NOTICE: THIS POLICY CONTAINS ONE OR MORE COVERAGES. CERTAIN COVERAGES ARE LIMITED TO LIABILITY FOR CLAIMS THAT ARE FIRST MADE AGAINST YOU AND NOTIFIED TO US DURING THE POLICY PERIOD AS REQUIRED. CLAIM EXPENSES SHALL REDUCE THE APPLICABLE LIMITS OF LIABILITY AND ARE SUBJECT TO THE APPLICABLE RETENTION(S). TERMS THAT APPEAR IN BOLD FACE TYPE HAVE SPECIAL MEANINGS. SEE THE DEFINITIONS FOR MORE INFORMATION. PLEASE READ THIS POLICY CAREFULLY.

In consideration of the payment of the premium and reliance upon the statements made by **You** in the **Application** and subject to the limits and sublimits of liability and coverage, exclusions, conditions and other terms of this Policy, it is agreed as follows:

I. COVERAGES

A. PRIVACY AND SECURITY LIABILITY AND REGULATORY CLAIMS

We shall pay on **Your** behalf **Damages** and **Claim Expenses** that **You** become legally obligated to pay in excess of the applicable Retention resulting from a **Claim** or **Regulatory Claim** first made against **You** and reported to **Us** during the **Policy Period** or **Extended Reporting Period** arising out of a **Privacy Breach, Security Breach** or **Security Wrongful Act**.

B. BREACH RESPONSE SERVICES

We shall provide **You**, subject to the applicable Retentions, with **Incident Response Services** and **Notification Services** in the event of an actual or reasonably suspected **Security Breach** or **Privacy Breach** with respect to **Private Information** that **You** first discover during the **Policy Period** and report to **Us** as soon as practicable within the **Policy Period**.

C. PCI DSS ASSESSMENTS

We shall pay on **Your** behalf those amounts, in excess of the applicable Retention**,** which **You** are legally obligated to pay as a **PCI DSS Assessment** resulting from a **Security Breach** that **You** first discover and report to **Us** during the **Policy Period**. In the event of such **Security Breach** and **PCI DSS Assessment**, **We** shall reimburse **You** for **PCI Recertification Expenses** up to the amount specified in the Declarations, which shall be part of and not in addition to the overall limit of liability specified for **PCI DSS Assessments**.

D. CYBER EXTORTION

We will reimburse **You** for **Cyber-Extortion Expenses** and **Cyber-Extortion Payments** in excess of the applicable Retention that **You** actually pay resulting directly from a **Cyber-Extortion Threat** that **You** first receive and report to **Us** during the **Policy Period**.

E. BUSINESS INCOME LOSS

We will reimburse **You** for **Business Income Loss** in excess of the applicable Retention that **Your Organization** sustains during a **Period of Restoration** resulting solely and directly from a **Network Disruption** due to a **Covered Cause of Loss** that **You** first discover and report to **Us** during the **Policy Period**, but only if the duration of the **Network Disruption** exceeds the **Waiting Period**.

F. DIGITAL ASSET RESTORATION

We will reimburse **You** for **Restoration Costs** in excess of the applicable Retention that **Your Organization** incurs because of the alteration, destruction, damage, or loss of **Digital Assets** resulting solely and directly from a **Covered Cause of Loss** that **You** first discover and report to **Us** during the **Policy Period**.

G. MULTIMEDIA LIABILITY

We shall pay on **Your** behalf **Damages** and **Claim Expenses** that **You** become legally obligated to pay in excess of the applicable Retention resulting from a **Claim** first made against **You** and reported to **Us** during the **Policy Period** or **Extended Reporting Period** arising out of a **Multimedia Wrongful Act**.

H. CYBER CRIME

We shall indemnify **You** for **Crime Loss** in excess of the applicable Retention that **You** first discover and report to **Us** during the **Policy Period**.

I. INVOICE MANIPULATION

We shall indemnify **You** for **Invoice Manipulation Loss** in excess of the applicable Retention that **You** first discover and report to **Us** during the **Policy Period**.

J. SYSTEM HIJACKING

We shall indemnify **You** for **System Hijacking Loss** in excess of the applicable Retention that **You** first discover and report to **Us** during the **Policy Period**.

K. SUPPLEMENTAL COVERAGES

POST BREACH REMEDIAL CONSULTING

When **Incident Response Services** are provided under Coverage B., **We** shall pay up to the number of hours specified in the Declarations for a **Breach Response Panel** vendor to provide ongoing consulting to **You** to recommend improvements or upgrades to **Your** computer security, provided there is a reasonable possibility to significantly reduce the likelihood of a similar **Security Breach** from occurring in the future and such costs shall be part of and not in addition to the overall limit of liability specified for **Incident Response Services**.

REPUTATIONAL HARM

When **Notification Services** are provided under Coverage B., **We** will pay **You** for **Reputational Harm** in excess of the applicable Retention that **Your Organization** sustains during the **Reputational Risk Period**.

CLAIMS PREPARATION COSTS

We shall reimburse **You** up to fifty percent (50%) of the reasonable and necessary costs **You** incur (including the cost of utilizing external consultants but excluding the costs of public adjusters or counsel) for the preparation, presentation, and certification of a proof of loss in respect of **Business Income Loss** or **Reputational Harm**. Such reimbursement shall not exceed the amount specified in the Declarations and shall be part of and not in addition to the overall limit of liability specified for such **Business Income Loss** or **Reputational Harm**.

COURT ATTENDANCE COSTS

We will pay the actual lost wages and reasonable expenses as a result of **Your** attendance at any mediation, arbitration, hearing, deposition or trial related to the defense of any **Claim**, however the maximum **We** will pay per day shall not exceed the amount specified in the Declarations.

CRIMINAL REWARD PAYMENTS

We will reimburse **You** for **Criminal Reward Payments** up to and not exceeding the amount specified in the Declarations that **You** make with **Our** prior written consent during the **Policy Period** or within six months of its expiry; however **We** will not pay any amount for any information provided by **You**, **Your** auditors or any individual hired to participate in any investigation, and any **Criminal Reward Payments** offered pursuant to this Policy must expire no later than six months following the end of the **Policy Period.**

II. DEFENSE, SETTLEMENT, AND INVESTIGATION OF CLAIMS

A. **We** shall have the right and duty to defend, subject to the applicable policy aggregate limit and applicable per coverage limits and sublimits of liability, exclusions and other terms and conditions of this Policy, any **Claim** against **You** seeking **Damages** which are payable under the terms of this Policy, even if any of the allegations of the **Claim** are groundless, false, or fraudulent and **We** shall have the right to appoint defense counsel.

We agree that **You** may settle any **Claim** where the amounts covered under this Policy (including **Claim Expenses**) do not exceed fifty percent (50%) of the Retention, provided the entire **Claim** is resolved and **You** receive a full and final release from all claimants.

We shall have the right to make any investigation **We** deem necessary, including, without limitation, any investigation with respect to the **Application** and statements made in the **Application** and with respect to coverage.

The policy aggregate limit of liability, and per coverage and sublimits of liability as stated on the Declarations page shall be reduced and may be completely exhausted by payment of **Claim Expenses**.

B. If **You** refuse to consent to a settlement or compromise **We** recommend that is acceptable to the claimant and elect to contest the **Claim**, then:

Subject to the applicable limit of liability, **Our** liability for any **Damages, PCI DSS Assessments,** and **Claim Expenses** shall not exceed:

1. The amount for which the **Claim** could have been settled, plus the **Claim Expenses** incurred prior to the date of such refusal; and

2. sixty percent (60%) of the **Damages, PCI DSS Assessments,** and **Claim Expenses** in excess of the amount in a. above incurred in such **Claim**; provided that **You** bear the remaining forty percent (40%) of the **Damages, PCI DSS Assessments,** and **Claim Expenses** in excess of the amount in 1. above incurred in such **Claim** uninsured and at **Your** own risk; and

We shall have the right to withdraw from the further defense of such **Claim** by tendering control of the defense to **You**.

This clause shall not apply to any settlement where the total of the proposed settlement and incurred **Claim Expenses** do not exceed all applicable Retentions.

C. **We** shall not be obligated to pay any **Damages, PCI DSS Assessments,** or **Claim Expenses**, or to undertake or continue defense of any **Claim**, after the policy aggregate limit or applicable per coverage limit sublimit of liability as stated on the declarations page has been exhausted by payment of **Damages, PCI DSS Assessments**, **Claim Expenses,** and/or other amounts covered under this Policy or after deposit of the applicable limit of liability in a court of competent jurisdiction, and that upon such payment or deposit, **We** shall have the right to withdraw from the further defense thereof by tendering control of said defense to **You**.

III. TERRITORY

This insurance applies to **Security Breaches**, **Cyber Extortion Threats**, **Loss**, and **Covered Causes of Loss** which occur, and **Claims** made, and acts, errors, or omissions committed or alleged to have been committed anywhere in the world.

IV. EXCLUSIONS

The coverage under this Policy shall not apply to any **Loss, Damages, Claim Expenses**, **Breach Response Services, PCI DSS Assessments**, costs or payments under Coverage K. **SUPPLEMENTAL COVERAGES**, or any other amounts, arising out of or resulting, directly or indirectly, regardless of any other cause occurring in any sequence, from:

A. **Bodily Injury** or **Property Damage,** except that this exclusion shall not apply to emotional distress or mental anguish arising out of an actual or alleged **Privacy Breach, Security Breach** or **Security Wrongful Act**;

B. **Your** employment practices or any alleged or actual discrimination against any person or entity on any basis, including without limitation, race, creed, color, religion, ethnic background, national origin, age, handicap, disability, sex, sexual orientation, gender identity or pregnancy; provided this exclusion shall not apply to an otherwise covered **Claim** under Coverage A. by a current or former **Employee** of **Your Organization**; or to the provision of **Breach Response Services** involving current or former **Employees** of **Your Organization**;

C. The failure, malfunction or inadequacy of any satellite, any electrical or mechanical failure and/or interruption, including but not limited to electrical disturbance, outage, spike, brownout or blackout; or any outage to gas, water, telephone, cable, internet service, telecommunications, or other infrastructure, unless such infrastructure is under **Your** operational control;

D. Fire, smoke, explosion, lightning, wind, water, flood, earthquake, volcanic eruption, tidal wave, landslide, hail, an act of God, or any other physical event, however caused;

E. Any alleged or actual defects in any goods, services, or products sold, supplied, repaired, altered, manufactured, installed or maintained by **You**;

F. Any unsolicited email, robocalls, text messages, direct mail or facsimiles, wiretapping, eavesdropping, audio or video recording, or telemarketing, including without limitation any actions brought under the Telephone Consumer Protection Act of 1991, any federal or state anti-spam statutes, and/or any other federal or state statute, law or regulation relating to a person's or entity's right of seclusion;

G. Any seizure, confiscation, nationalization, or destruction of, or damage to, or loss of use of any **Digital Asset** or **Your Computer Systems** by order of any governmental authority; provided, however, any seizure, confiscation, nationalization, or destruction of, or damage to, or loss of use of any **Digital Asset** or **Your Computer System** by order of any governmental authority shall not apply to loss of use of any **Digital Asset** or **Your Computer System** by order of any governmental authority in respect of otherwise covered **Business Income Loss** resulting solely and directly from subpart 4.a of the definition of **Covered Cause of Loss**;

H. Breach of any express, implied, actual, or constructive contract, agreement, warranty, guarantee, or promise, provided, however, this exclusion shall not apply to:

1. any liability or obligation **You** would have in the absence of such contract or agreement;
2. any breach of **Your** written, public-facing privacy policy;
3. any indemnity by **You** in a written contract or agreement with **Your** client regarding any **Privacy Breach, Security Breach** or **Security Wrongful Act** by **You** in failing to preserve the confidentiality of **Private Information** of customers of **Your** client;

I. Any of the following:

1. Any presence of pollutants or contamination of any kind;
2. Any actual, alleged or threatened discharge, dispersal, release, or escape of pollutants or contamination of any kind;
3. Any direction or request to test for, monitor, clean up, remove, abate, contain, treat, detoxify, or neutralize pollutants or in any way respond to or assess the effects of pollutants or contamination of any kind;
4. Manufacturing, mining, use, sale, installation, removal, distribution of or exposure to asbestos, materials, or products containing asbestos, asbestos fibers or dust;
5. Ionizing radiation or contamination by radioactivity from any nuclear fuel or any nuclear waste from the combustion of nuclear fuel;
6. Actual, potential or alleged presence of mold, mildew or fungi of any kind;
7. The radioactive, toxic, or explosive or other hazardous properties of any explosive nuclear assembly or nuclear component thereof; or
8. The existence, emission or discharge of any electromagnetic field, electromagnetic radiation or electromagnetism that actually or allegedly affects the health, safety, or condition of any person or the environment or that actually or allegedly affects the value, marketability, condition, or use of any property;

J. Any of the following:

1. Purchase, sale, offer of or solicitation of an offer to purchase or sell securities, or alleged or actual violation of any securities law, including but not limited to the provisions of the Securities Act of 1933, or the Securities Exchange Act of 1934, as amended, the Sarbanes- Oxley Act of 2002, including any amendments to all of the foregoing, or any regulation promulgated under the foregoing statutes, or any federal, state, local, or foreign laws similar to the foregoing statutes (including "Blue Sky" laws), whether such law is statutory, regulatory, or common law;
2. Alleged or actual violation of the Organized Crime Control Act of 1970 (commonly known as "Racketeer Influenced And Corrupt Organizations Act" or "RICO"), as amended, or any regulation promulgated thereunder, or any federal, state, local, or foreign law similar to the foregoing statute, whether such law is statutory, regulatory, or common law;
3. Alleged or actual violation of the responsibilities, obligations or duties imposed upon fiduciaries by the Employee Retirement Income Security Act of 1974, as amended and including any future amendments; provided, however, this exclusion J.3. shall not apply to an otherwise covered **Claim** under Coverage A.; or
4. Alleged or actual anti-trust violations, restraint of trade or unfair competition, including without limitation, violations of the Sherman Act, the Clayton Act, or the Robinson-Patman Act, or any other federal, state, local, or foreign laws regulating the same or similar conduct and including any future amendments to all the foregoing; provided, however, this exclusion J.4 shall not apply to a **Claim** for a **Multimedia Wrongful Act**;

K. Any **Act of Terrorism**; strike or similar labour action, war, invasion, act of foreign enemy, hostilities or warlike operations (whether declared or not), civil war, mutiny, civil commotion assuming the proportions of or amounting to a popular rising, military rising, insurrection, rebellion, revolution, military or usurped power, or any action taken to hinder or defend against these actions; including all amounts, **Damages**, or **Claim Expenses** of whatsoever nature directly or indirectly caused by, resulting from or in connection with any action taken in controlling, preventing, suppressing, or in any way relating to the above; however, if **We** allege that by reason of this exclusion any **Loss, Damages, Claim Expenses, Breach Response Services**, **PCI DSS Assessments**, or other amounts are not covered by this Policy, the burden of proving the contrary shall be upon **You**; however,

this exclusion shall not apply to **Cyber Terrorism**.

L. Any of the following:

1. Any circumstance, act, error, or omission first occurring prior to the **Continuity Date** of this Policy, if on or before the **Continuity Date** of this Policy, **Your Control Group** knew or could reasonably have foreseen such circumstance, act, error, or omission would be the basis of a **Claim**;
2. Any **Claim,** incident, or circumstance previously notified to a prior insurer that could reasonably be expected to be the type of **Claim** or **Loss** covered by this Policy;
3. With respect to Coverages H., G., and I.:
   a. Any **Loss** discovered prior to the inception date of this policy; or
   b. Any **Loss** notified to a prior insurer; or
   c. Any **Loss** occurring subsequent to the termination of the Policy;
   d. The actual or purported use of a credit, debit, charge, access, convenience, stored-value, or other payment card, or account information pertaining to or contained on such cards;

M. Any criminal, dishonest, intentional violation of the law, unfair, or deceptive business practice, fraudulent, or malicious act, error, or omission committed by **You** with actual criminal, dishonest, fraudulent, or malicious purpose or intent; provided, however, this exclusion shall not apply to:

1. **Claim Expenses** incurred in defending any such **Claim** until there is a final adjudication, judgment, binding arbitration decision or conviction against **You** in such **Claim** or an admission by **You** establishing such conduct, or a plea of *nolo contendere* or no contest by **You** regarding such conduct, in which event **You** shall reimburse **Us** for all **Claim Expenses** that **We** have paid and **We** shall have no further liability for **Claim Expenses** from such **Claim**; and
2. any of **You** who did not personally commit or personally participate in committing or personally acquiesce in such conduct, except that the exclusion shall apply with respect to **Your Organization** if an admission, final adjudication, or finding in a proceeding separate or collateral to the **Claim** establishes that a current principal, partner, director, or officer of **Your Organization** in fact engaged in such conduct;

N. Any **Claim** made by or on behalf of:

1. any person or entity within the definition of **You** against any other Insured person or entity within the definition of **You**; provided, however, this exclusion shall not apply to (i) an otherwise covered **Claim** by **Your** client or customer brought in their capacity as a client or customer, or (ii) an otherwise covered **Claim** under Coverage A. made by a current or former **Employee** of **Your Organization**; or
2. Any entity which:
   a. Is operated, managed, or controlled by **You** or in which **You** have an ownership interest in excess of fifteen percent (15%) or in which **You** are an officer or director; or
   b. Operates, controls, or manages **Your Organization**, or has an ownership interest of more than 15% in **Your Organization**;

O. **Your** activities as a trustee, partner, officer, director, or employee of any employee trust, charitable organization, corporation, company or business other than **Your Organization**;

P. Any **Loss** or **Claim** against a **Subsidiary** or any partner, director, officer or **Employee** thereof for any act, error, omission, **Privacy Breach**, **Security Breach**, **Security Wrongful Act**, **Multimedia Wrongful Act** or **Network Disruption** that first occurred when **You** did not own more than fifty percent (50%) of the issued and

outstanding stock of such **Subsidiary**, either directly or indirectly through one or more of the **Subsidiaries**;

Q. Based upon or arising from any actual or alleged obligation to make pay licensing fees or royalty payments, including but not limited to the timeliness of such payments;

R. Any actual or alleged:

1. Infringement or violation of patent rights or misappropriation, theft, copying, display, or publication of any trade secret by, or with active cooperation, participation, or assistance of, **You**, any of **Your** former **Employees**, **Subsidiaries**, directors, officers, partners, trustees, or any of **Your** successors, or assignees; provided, however, this exclusion shall not apply to any misappropriation of any trade secret obtained as a result of a **Security Wrongful Act** as expressly covered under Coverage A;
2. Advertisement, display, or sale of **Your** product (including any third party produced products that **You** distribute or sell) that actually or allegedly violates an intellectual property right, including but not limited to patent, trademark, copyright, trade name, trade dress, or service mark;
3. false advertising;

S. Any of the following:

1. Trading losses or trading liabilities;
2. the monetary value of any electronic fund transfers or transactions by or on behalf of **You** which is lost, diminished, or damaged during transfer from, into or between accounts;
3. the face value of coupons, price discounts, prizes, awards, or any other valuable consideration given in excess of the total contracted or expected amount;
4. the theft of any money, securities, or any equivalents thereof (including e-certificates, coupons, gift cards and vouchers); or
5. the monetary value of any transfer of funds, securities, or any equivalents thereof (including e-certificates, coupons, gift cards, and vouchers) made as a result of a fraudulent instruction (including phishing or any other social engineering techniques)

provided, however, parts 2 through 5 of this exclusion shall not apply to coverage which is available for **Crime Loss** or **Invoice Manipulation Loss** that is not otherwise excluded;

T. With respect to Coverage G., arising out of pornography, obscenity, blasphemy, or the actual or alleged illicit, illegal or wrongful sale or provision of prohibited, restricted, or regulated items including but not limited to alcoholic beverages, tobacco, or controlled substances;

U. Any costs of updating, upgrading or remediation of **Your Computer Systems** or **Your Digital Assets**; provided, however, this exclusion shall not apply to **Restoration Costs** otherwise covered under Coverage F.;

V. DEFINITIONS

Act of Terrorism means:

1. Any act certified an **Act of Terrorism** pursuant to the federal Terrorism Risk Insurance Act of 2002 or otherwise declared an **Act of Terrorism** by any government;
2. any act committed by any person or group of persons designated by any government as a terrorist or terrorist group or any act committed by any person or group of persons acting on behalf of or in connection with any organization designated by any government as a terrorist organization; or

3. the use of force or violence and/or the threat thereof by any person or group of persons, whether acting alone or on behalf of or in connection with any organization or government, committed for political, religious, ideological, or similar purposes, including the intention to influence any government and/or put the public, or any section of the public, in fear.

Affected Individuals means those customers or **Employees** affected or reasonably believed to be affected by a **Security Breach** or **Privacy Breach** with respect to **Private Information**.

Application means all applications, including any attachments thereto, and all other information and materials submitted by **You** or on **Your** behalf to **Us** in connection with the underwriting of this Policy. All such applications, attachments, information and materials are deemed attached to and incorporated into this Policy.

Bodily Injury means injury to the body, sickness, or disease sustained by any person, and where resulting from such injuries, mental anguish, mental injury, shock, humiliation, emotional distress, loss of consortium, or death.

Breach Response Panel means the vendors that **We** have pre-approved.

Breach Response Services means the following reasonable and necessary fees, costs, charges, or expenses in responding to an actual or reasonably suspected **Security Breach** or **Privacy Breach** with respect to **Private Information**:

1. **Incident Response Services**;
2. **Notification Services**;

You may incur costs under **Incident Response Services** Paragraph 1 (forensic services) and 2 (legal advice) without **Our** prior written consent if **You** use a vendor from the **Breach Response Panel**. Use of vendors not on the **Breach Response Panel** is permitted with **Our** prior written consent.

Business Income Loss means:

1. **Earnings Loss**; and/or
2. **Expenses Loss**.

Business Income Loss does not include:

a. any **Damages** paid, **PCI DSS Assessments, Regulatory Fines,** or **Breach Response Services** whether covered or not elsewhere within this policy

b. any contractual penalties**;**

c. any costs or expenses incurred to update, upgrade, replace, restore, or otherwise improve any **Computer System** to a level beyond that which existed prior to a **Network Disruption**;

d. any costs or expenses incurred to identify, remove, or remediate computer program errors or vulnerabilities, or costs to update, upgrade, replace, restore, maintain, or otherwise improve any **Computer System**;

e. any legal costs or expenses or loss arising out of liability to any third party;

f. any loss incurred as a result of unfavorable business conditions; or

g. any other consequential loss or damage.

Claim means:

1. A written demand received by **You** for money or services, including the service of a civil suit or institution of

arbitration or other alternative dispute resolution (ADR) proceedings;

2. Initiation of a civil suit against **You** seeking injunctive relief (meaning a temporary restraining order or a preliminary or permanent injunction);
3. A **Regulatory Claim** made against **You**; or
4. A **PCI DSS Assessment** levied against **You**.

Multiple **Claims** arising from the same or a series of related or repeated acts, errors, or omissions or from any continuing acts, errors, or omissions shall be considered a single **Claim** for the purposes of this Policy, irrespective of the number of claimants or **You** involved in the **Claim**. All such **Claims** shall be deemed to have been made at the time the first such **Claim** was made or deemed made pursuant to the **NOTICE** provision of Section IX.

Claim Expenses means:

1. reasonable and necessary fees charged in the defense or settlement of a **Claim** by an attorney whom **We** designate or whom **You** designate with **Our** prior written consent, such consent not to be unreasonably withheld; and
2. all other legal costs and expenses resulting from the investigation, adjustment, defense, and appeal of a **Claim**, if incurred by **Us** or by **You** with **Our** prior written consent; however, **Claim Expenses** do not include **Your** expenses or any salaries, wages, fees, or benefits of **Your Employees** for any time spent in cooperating in the defense or investigation of any **Claim** or circumstance that might lead to a **Claim**.

Computer Hardware means the physical, tangible parts and components of a **Computer System** and does not include software or any other **Digital Assets**. **Computer Hardware** also does not include any operational technology, any industrial or manufacturing control system, or any other system that detects or causes a physical change through the direct monitoring and/or control of physical devices, processes and events, including but not limited to robotic devices, SCADA systems, or any other automated systems.

Computer Systems means electronic, wireless, web or similar systems (including all hardware and software) used to process data or information in an analogue, digital, electronic or wireless format including computer programs, electronic data, operating systems, and components thereof, including but not limited to, laptops, personal digital assistants, media storage and peripheral devices, media libraries, associated input and output devices, networking equipment, and electronic backup equipment.

Consumer Redress Funds means any sums of money **You** are legally required to deposit in a fund for the payment of consumer claims due to a settlement of, or an adverse judgment in, a **Regulatory Claim**.

Continuity Date means the date specified as such in the Declarations.

Control Group means **Your** Chief Executive Officer, Chief Financial Officer, General Counsel, Risk Manager, Chief Technology Officer, Chief Privacy Officer, Chief Information Officer, or Chief Information Security Officer (or any functional equivalent of the foregoing regardless of the actual specific title).

Corrupted Computer Hardware means **Your Computer Hardware** that has not suffered physical damage but has been rendered non-functional or useless for any part of its intended use or purpose by any **Unauthorized Access** to, **Unauthorized Use** of, or the transmission of **Malicious Code** to **Your Computer System**. **Computer Hardware** shall be deemed to be non-functional or useless if:

1. it cannot be restored to functionality after reasonable efforts have been made; or

2. the cost to replace **Your Computer Hardware** is less than the cost to restore or recreate the **Digital Assets** installed on **Your Computer Hardware** to a level that is functionally equivalent to the level that existed prior to the **Unauthorized Access** to**, Unauthorized Use** of, or transmission of **Malicious Code** to **Your Computer System**.

Covered Cause of Loss means:

1. The **Unauthorized Access** or **Unauthorized Use** of **Your Computer System** or **Your Digital Assets**;
2. The inability to access, loss of, or damage to **Your Digital Assets**;
3. Any unplanned partial or total outage of **Your Computer System**, including a **Computer System** that is under the direct operational control of a **Service Provider**; or
4. Solely with respect to coverage for **Business Income Loss**, the voluntary and intentional shutdown by **You** of a **Computer System** over which **You** have direct operational control, that is in direct response to **Your** discovery of a failure of computer security to prevent the **Unauthorized Access** or **Unauthorized Use** of such **Computer System**, and
    a. expressly required by any federal, state, or local governmental entity in such entity's regulatory or official capacity; or
    b. at the recommendation of the **Breach Response Panel** vendor providing computer forensic **Breach Response Services** to **You**, and only to the extent necessary to limit covered loss from such **Unauthorized Access** or **Unauthorized Use**; or
    c. at the direction of **Your** Chief Information Security Officer (or the functionally equivalent position regardless of title), who has first obtained consent from the **Breach Response Panel** vendor providing computer forensic **Breach Response Services** to **You**, and based on such officer's reasonable belief that such shutdown is necessary to limit covered loss from such **Unauthorized Access** or **Unauthorized Use**; provided, however, **We** shall be entitled to reduce any payment for **Business Income Loss** by the monetary equivalent of any prejudice that has been suffered as a result of such action as determined solely by **Us**.

Crime Loss means direct financial loss sustained by **You**, resulting from the theft of **Your** funds or securities:

1. which are transferred electronically due to dishonest manipulation or misuse of **Your Computer System** by a **Malicious Third Party** who has not been granted authorized access to such computer system by **You**; or
2. due to fraudulent electronic or telephonic instructions to transfer funds or securities that are issued by a **Malicious Third Party** to **You**.

For the avoidance of doubt, **Your** funds or securities shall not include any funds or securities of others which are under **Your** care, custody or control or for which you have a fiduciary or custodial responsibility.

Criminal Rewards Payment shall mean a monetary payment **You** offer and make with **Our** prior written consent for information that leads to the arrest and conviction of any individual(s) committing or attempting to commit any illegal acts in connection with an event for which coverage is provided by this Policy.

Cyber Terrorism means the premeditated use of disruptive activities against **Your Computer System** by an individual or group of individuals, or the explicit threat by an individual or group of individuals to use such activities, with the intention to cause harm, further social, ideological, religious, political or similar objectives, or to intimidate any person(s) in furtherance of such objectives. **Cyber Terrorism** does not include any such activities which are part of or in support of any military action, war, or warlike operations.

Cyber-Extortion Expenses means the reasonable and necessary expenses **You** incur with **Our** prior written approval in evaluating and responding to a **Cyber-Extortion Threat**. However, **Cyber- Extortion Expenses** do not include **Your** overhead expenses or any salaries, wages, fees, or benefits of **Your Employees**.

Cyber-Extortion Payment means any sum paid to or at the direction of any third party that **You** reasonably believe to be responsible for a **Cyber-Extortion Threat**; provided that**:**

1. **You** obtain **Our** written consent prior to making such **Cyber-Extortion Payment;**
2. **You** make such **Cyber-Extortion Payment** to terminate the **Cyber-Extortion Threat**; and
3. the **Cyber-Extortion Payment** does not exceed the amount **We** reasonably believe would have been incurred had such **Cyber-Extortion Payment** not been made.

Cyber-Extortion Threat means a credible threat or connected series of threats made by someone other than a director, trustee, or partner of **Your Organization**:

1. to introduce **Malicious Code** into **Your Computer System**;
2. to interrupt **Your Computer System** or interrupt access to **Your Computer System**, such as through a **Denial of Service Attack**;
3. to corrupt, damage, or destroy **Your Computer System**; or
4. to disseminate, divulge, or improperly utilize any **Private Information** residing on **Your Computer Systems**.

Damages means solely with respect to Coverages A. and G., a monetary judgment, award, or settlement, including:

1. Pre-judgment interest;
2. Post-judgment interest that accrues after entry of the judgment or award and before **We** have paid, offered to pay, or deposited in court that part of the judgment or award within the applicable limit of liability;
3. subject to this Policy's terms, conditions, and exclusions, punitive or exemplary damages (where insurable by the applicable venue that most favors coverage for such amounts); and
4. Regulatory Fines and Consumer Redress.

Damages shall not include or mean:

a. **Your** future profits, restitution, or disgorgement of profits; or **Your** cost to comply with any order granting injunctive or non-monetary relief, including specific performance, or any agreement to provide such relief;

b. **Your** return or offset of fees, charges, royalties, or commissions for goods or services already provided or contracted to be provided;

c. Fines or penalties of any nature (except as arising out of a covered **Regulatory Claim**);

d. Any amount **You** are not financially or legally obligated to pay;

e. Multiple damages;

f. Any donations or contributions to any charitable organization;

g. Liquidated damages to the extent that such damages exceed the amount for which **You** would otherwise have been liable in the absence of such liquidated damages agreement;

h. Matters that may be deemed uninsurable under the law pursuant to which this Policy may be construed;

i. **PCI DSS Assessments**.

Denial of Service Attack means the inability of a third party to gain access to **Your Computer Systems** through the Internet due to unauthorized attacks or deliberate overloading of bandwidth connections and/or web servers by means of the sending of substantial quantities of repeat or irrelevant communication or data with the intent of blocking access to **Your Computer Systems** by third parties.

Digital Assets means any electronic data, including personally identifiable, non-public information, or computer software over which **You** have direct control or for which such control has been contractually assigned by **Your Organization** to a **Service Provider**. **Digital Assets** do not include computer hardware, storage devices, or physical media of any kind.

Earnings Loss means the difference between the actual revenue and the expected revenue that **Your Organization** would have earned during the **Period of Restoration** (based on reasonable projections), but for the **Network Disruption**, less the variable and fixed costs that would have been incurred, which **Your Organization** saved as a result of not earning that revenue.

Employee means any individual in **Your Organization's** service, including any part-time, seasonal, and temporary **Employee**, who is compensated by salary, wages, fees, or commissions and over whom **You** have the right to direct and control, but excluding any partner or director of **Your Organization**.

Expenses Loss means the additional expenses **Your Organization** incurred during a **Network Disruption** to minimize the suspension of business and to continue operations during the **Period of Restoration** that are over and above the cost that **Your Organization** reasonably and necessarily would have incurred to conduct **Your** business had no **Network Disruption** occurred, provided that the additional expenses are less than the **Earnings Loss** thereby avoided. These additional expenses include actual, reasonable, and necessary expenses **You** incur in response to a **Network Disruption** in order to prevent, minimize, or mitigate any further damage to **Your Digital Assets**, or preserve critical evidence of any wrongdoing, but do not include any **Restoration Costs**.

Extended Reporting Period means the period of time after the end of the **Policy Period** for reporting **Claims** as provided in Section VIII. of this Policy.

Identity Protection Services means the reasonable and necessary costs to offer free credit reports, identity theft protection services, credit monitoring services, identity restoration services, or other services and products deemed appropriate at **Our** sole discretion for a period of up to one (1) year, unless there is a rule, regulation, statutory requirement, or court order requiring the provision of **Identity Protection Services** for a longer period.

Incident Response Services means the following reasonable and necessary fees, costs, charges, or expenses in responding to an actual or reasonably suspected **Security Breach** or **Privacy Breach** with respect to **Private Information**:

1. computer forensic professional fees and expenses to determine the cause and extent of such **Privacy Breach** or **Security Breach**;
2. legal fees and expenses to determine whether **You** are obligated under applicable **Privacy Regulations** to notify applicable regulatory agencies or **Affected Individuals** of such **Privacy Breach** or **Security Breach**, draft the text of notifications to regulatory agencies and **Affected Individuals**, and coordinate the investigation of such **Privacy Breach** or **Security Breach**; and
3. fees and costs to employ a public relations consultant, with **Our** prior written consent, to avert or mitigate any material damage to any of **Your** brands due to a **Newsworthy Event** that has arisen due to such **Privacy**

Breach or **Security Breach**.

Invoice Manipulation Loss means **Your** direct net financial loss (which shall not include any profit or mark-up) from **Your** inability to collect payment from **Your** client or customer for goods, products or services **You** provided because a fraudulent invoice directing payment to a third party instead of **You** was created or issued solely and directly as a result of **Unauthorized Access** or **Unauthorized Use** of **Your Computer System** by a **Malicious Third Party**.

Loss(es) means:

1. **Business Income Loss**;
2. **Reputational Harm**;
3. **Restoration Costs**;
4. **Cyber-Extortion Payments** and **Cyber-Extortion Expenses**;
5. **Crime Loss**;
6. **Invoice Manipulation Loss**;
7. **System Hijacking Loss**;

All **Losses** arising from the same or related underlying facts, circumstances, situations, transactions, or events or related **Covered Cause of Loss** shall be deemed a single **Loss.**

Malicious Code means any unauthorized and corrupting or harmful computer code, including but not limited to computer viruses, spyware, Trojan horses, worms, logic bombs, and mutations of any of the preceding.

Malicious Third Party means any natural person who:

1. is not an **Employee** (including any director, officer or trustee of **Your Organization** and any member of the **Control Group**);
2. does not have, and does not provide services under, any contract for services, written or implied, with **You**; and
3. is not in collusion with any **Employee** (including any director, officer or trustee of **Your Organization** and any member of the **Control Group**).

Media Content means data, digital code, images, graphics, sounds, text, or any other similar material in any medium, but shall not include software, computer programs, or tangible goods.

Merchant Services Agreement means any agreement between **Your Organization** and any entity, including a financial institution, credit or debit card company, brand or network, credit or debit card processor, independent sales organization, gateway or membership service, enabling **Your Organization** to accept payment by credit card, debit card, or pre-paid card.

Multimedia Wrongful Act means any of the following acts committed in the ordinary course of **Your Organization's** business in gathering, communicating, reproducing, publishing, disseminating, displaying, releasing, transmitting, or disclosing **Media Content**:

1. defamation, libel, slander, product disparagement, trade libel, infliction of emotional distress, outrage, outrageous conduct, or other tort related to disparagement or harm to the reputation or character of any person or organization;

2. invasion of or interference with the right to privacy or publicity;
3. false arrest, detention, imprisonment, or malicious prosecution;
4. infringement of any right to private occupancy, including trespass, wrongful entry, or eviction;
5. infringement of copyright, domain name, trade dress, title, or slogan, or the dilution or infringement of trademark, service mark, service name, or trade name; or
6. plagiarism, piracy, or misappropriation of ideas;

provided always that any **Multimedia Wrongful Act** was committed or alleged to have been committed by **You**, or any person for whom or entity for which **You** are legally responsible, including an independent contractor or outsourcing organization.

Network Disruption means any of the following events:

1. A detectable failure, interruption, or degradation of the operation of **Your Computer System**; or
2. The denial, restriction, or hindrance of access to or use of **Your Computer System** or **Your Digital Assets** by any party who is otherwise authorized to have access.

More than one such event that results from the same or related underlying facts, circumstances, situations, transactions, or **Covered Cause of Loss** shall be considered a single **Network Disruption** which commences on the date of the earliest of such events.

Notification Services means:

1. the reasonable and necessary printing costs, publishing costs, postage expenses, call center costs, or costs of notification via phone or e-mail to provide notifications to **Affected Individuals:**
   a. that **You** are obligated to notify under applicable **Privacy Regulations**; or
   b. that **You** are not legally obligated to notify (i.e., voluntary notifications), provided **You** obtain **Our** prior written consent; and
2. the reasonable and necessary costs to provide **Identity Protection Services** for those **Affected Individuals** who are provided notification pursuant to paragraph 1 above.

Newsworthy Event means an event that has been caused by a **Claim** or **Security Breach** within one of the Coverages which **You** have purchased, that has been publicized through any media channel, including television, print media, radio or electronic networks, the Internet, or electronic mail.

PCI DSS Assessment means the direct monetary fines, penalties, reimbursements, fraud recoveries or assessments owed by **You** under the terms of a **Merchant Services Agreement,** but only where such fines, penalties, reimbursements, fraud recoveries or assessments result from a breach of cardholder data resulting from an actual or reasonably suspected **Security Breach.**

PCI Data Security Standards (PCI DSS) means the published Payment Card Industry Data Security Standard for data security in effect now or as hereafter amended that all merchants, processors, and **Service Providers** must follow when storing, processing, and transmitting cardholder data.

PCI Recertification Expenses means reasonable and necessary costs and expenses **You** incur within six months following payment of the **PCI DSS Assessment** in response to a directive or requirement that **You** certify **Your** compliance with **PCI Data Security Standards (PCI DSS)**.

Period of Restoration means one hundred and eighty (180) consecutive days from the commencement of a **Network Disruption.**

Policy Period means the period of time commencing with the "from" effective date (specified in the Declarations) and ending with the "to" expiration date (specified in the Declarations) or any earlier cancellation date.

Privacy Breach means a breach of **Privacy Regulations**, confidence, infringement, or violation of any rights to privacy, including but not limited to breach of **Your** written, public facing privacy policy, breach of a person's right of publicity, false light, intrusion upon a person's seclusion, public disclosure of a person's private information, or misappropriation of a person's picture or name for commercial gain.

Privacy Regulations means any federal, state, local, or foreign statute (including but not limited to the EU General Data Protection Regulation), rule, regulation, or other law (including common law) requiring **You** to limit or control the collection, use of, or access to, personally identifiable, non-public information in **Your** possession or under **Your** control, or obligating **You** to inform individuals of the **Unauthorized Access** to or disclosure of such personally identifiable, non-public information for all locations where **You** operate. **Privacy Regulations** does not include **PCI Data Security Standards (PCI DSS)**.

Private Information means:

1. confidential information of a third party; or
2. information that can be used to determine an individual's identity, either alone or when combined with other information that is linked or linkable to a specific individual or household;

that is in **Your** care, custody or control or the care, custody or control of a **Service Provider**.

Property Damage means physical injury to or destruction of any tangible property, including the loss thereof; provided, however, for the avoidance of doubt, tangible property does not include (i) **Digital Assets** and (ii) solely with respect to Coverage F., **Corrupted Computer Hardware**.

Regulatory Claim means any investigation of or action against **You** by a governmental entity in its official capacity (including a civil, administrative or regulatory request for information, investigative demand, or subpoena) concerning a **Privacy Breach** or **Security Breach.**

Regulatory Fines means monetary fines, penalties, or sanctions awarded for a violation of any **Privacy Regulations**.

Reputational Harm means the financial harm **Your Organization** sustains to its reputation as a direct result of a **Newsworthy Event** or **Notification Services** being provided to **You** due to a **Privacy Breach** or **Security Breach** for which **You** received coverage under Coverage B. **Breach Response Services**, and such financial harm shall be measured by the difference between the actual revenue and the expected revenue **Your Organization** would have earned (based on reasonable projections) but for such **Newsworthy Event** or **Notification Services** due to such **Privacy Breach** or **Security Breach**, less the variable and fixed costs that would have been incurred, which **Your Organization** saved as a result of not earning that revenue. **Reputational Harm** does not include:

1. any **Damages** paid, **PCI DSS Assessments, Regulatory Fines,** or **Breach Response Services** whether covered or not elsewhere within this policy;
2. any contractual penalties;
3. any costs or expenses incurred to update, upgrade, replace, restore, or otherwise improve any **Computer System** to a level beyond that which existed prior to the **Security Breach** or **Privacy Breach**;

4. any costs or expenses incurred to identify, remove, or remediate computer program errors or vulnerabilities, or costs to update, upgrade, replace, restore, maintain, or otherwise improve any **Computer System**;
5. any legal costs or expenses or loss arising out of liability to any third party;
6. any loss incurred as a result of unfavorable business conditions; or
7. any other consequential loss or damage.

Reputational Risk Period means one hundred twenty (120) consecutive days from the commencement of the earlier of (i) the initial publicization of a **Newsworthy Event** or (ii) the initial notification to **Affected Individuals** provided by **Notification Services.**

Restoration Costs means the actual, reasonable and necessary costs **You** incur to replace, restore, or re-create **Your Digital Assets** to the level or condition at which they existed prior to sustaining any **Covered Cause of Loss**. If such **Digital Assets** cannot be replaced, restored or recreated, then **Restoration Costs** will be limited to the actual, reasonable and necessary costs **You** incur to reach this determination. **Restoration Costs** also means the actual, reasonable and necessary costs **You** incur to replace **Corrupted Computer Hardware** as a result of any **Unauthorized Access** to, **Unauthorized Use** of, or the transmission of **Malicious Code** to **Your Computer System**, provided that the cost to replace **Corrupted Computer Hardware** is less than the cost to restore or recreate the **Digital Assets** installed on **Your Computer Hardware** to the level that is functionally equivalent to the level that existed prior to such **Unauthorized Access** to**, Unauthorized Use** of, or transmission of **Malicious Code** to **Your Computer System**. The costs to replace **Corrupted Computer Hardware** will be determined using the cost to replace such items with identical or commercially equivalent items. **Restoration Costs** do not include:

1. any costs **You** incur to replace, restore or recreate any of **Your Digital Assets** that were not subject to regular network back-up procedures or other maintenance procedures at the time of the **Covered Cause of Loss**;
2. any costs or expenses incurred to update, upgrade, replace, restore or otherwise improve **Your Digital Assets** or **Computer System** to a level beyond that which existed prior to sustaining any **Covered Cause of Loss**;
3. any costs or expenses incurred to identify, remove or remediate computer program errors or vulnerabilities, or costs to upgrade, replace, restore, maintain or otherwise improve any **Computer System** other than covered costs for **Corrupted Computer Hardware**; or
4. the economic or market value of any **Digital Assets**, including **Trade Secrets**.

Security Breach means:

1. the loss, **Unauthorized Access**, misuse, or disclosure of personal, non-public information of individuals or **Employees** in **Your** care, custody, or control, or that of a third party for which **You** are liable, including such information stored on paper or on **Your Computer System**; or
2. **Theft of Data** stored on **Your Computer System**;

that results in or may result in the compromise of the privacy or confidentiality of information.

More than one **Security Breach** arising from the same or a series of continuous, repeated, or related acts, errors, or omissions shall be considered a single **Security Breach**, which shall be deemed to have first occurred at the time of the first such **Security Breach**.

Security Wrongful Act means any act, error, or omission committed by **You** or a person or entity for which **You** are legally responsible, including an independent contractor or **Service Provider** that results in:

1. The inability of a third party, who is authorized to do so, to gain access to **Your Computer System**;
2. The failure to prevent **Unauthorized Access** to or **Unauthorized Use** of **Your Computer System** which results in:
   a. The alteration, copying, corruption, destruction or deletion of, or damage to, electronic data on **Your Computer System**;
   b. Unauthorized disclosure of information; or
   c. A **Denial of Service Attack** against a third-party's Internet site or **Computer Systems**; or
3. The failure to prevent transmission of **Malicious Code** from **Your Computer System** to a third party's **Computer System**.

Service Provider means any third party that is responsible for the processing, maintenance, protection, or storage of **Your Digital Assets** pursuant to a written contract directly with **Your Organization**. A **Service Provider** does not include any provider of telecommunications services, including internet access, to **You**.

Subsidiary means any corporation where more than fifty percent (50%) of the outstanding securities representing the present right to vote for the election of such corporation's directors are owned by the **Named Insured** directly or indirectly, if such corporation was so owned on the inception date of this Policy; or

1. becomes so owned after the inception date of this Policy, provided the revenues of the newly acquired corporation do not exceed fifteen percent (15%) of **Your Organization's** annual revenues as set forth in its most recent audited financial statement; or
2. becomes so owned after the inception date of this Policy, provided that if the revenues of the newly acquired corporation exceed 15% of **Your Organization's** annual revenues as set forth in its most recent audited financial statement, the **NEW SUBSIDIARIES/CHANGES IN NAMED ASSURED OR YOUR ORGANIZATION** provisions of Section IX. must be fulfilled.

System Hijacking Loss means additional increased costs for electricity, internet or telecommunications services **You** incur over and above the normal expenses for such services as a direct result of the **Unauthorized Access** or **Unauthorized Use** during the **Policy Period** of a **Computer System** over which **You** have direct operational control by a **Malicious Third Party** in an unauthorized manner; provided, the additional increased costs for such services are:

1. incurred pursuant to a written agreement between **You** and the respective utility provider executed prior to such loss occurring;
2. regularly invoiced to **You** on a periodic basis by the provider with statements including usage and consumption information; and
3. not charged on a flat or fixed cost basis which does not scale with usage or consumption.

If **You** incur a loss for a period exceeding sixty (60) days from the date on which the increased costs were first incurred, **We** will only be obligated to pay such loss that is incurred during the first sixty (60) days from the beginning of the **Unauthorized Access** or **Unauthorized Use**.

Theft of Data means the unauthorized taking, misuse, or disclosure of information on **Computer Systems**, including but not limited to charge, debit, or credit information, banking, financial, and investment services account information, proprietary information, and personal, private, or confidential information.

Unauthorized Access means the gaining of access to a **Computer System** by an unauthorized person or persons or an authorized person or persons in an unauthorized manner.

Unauthorized Use means the use of a **Computer System** by an unauthorized person or persons or an authorized person or persons in an unauthorized manner.

Waiting Period means the amount of time specified as such in the Declarations.

We or **Us** or **Our** means the underwriters providing this insurance.

You or **Your** or **Yours** means:

1. the entity identified in the Declarations as the **Named Insured** and its **Subsidiaries** (together "**Your Organization**");
2. Any present or future director, officer, or trustee of **Your Organization**, but only with respect to the performance of his or her duties as such on behalf of **Your Organization**;
3. Any present or future **Employee** of **Your Organization** but only with respect to work done while acting within the scope of his or her employment and related to the conduct of **Your Organization's** business;
4. In the event that the **Named Insured** is a partnership, limited liability partnership, or limited liability company, then any general or managing partner, principal, or owner thereof, but only while acting within the scope of his or her duties as such;
5. Any person who previously qualified as **You** under 2., 3., or 4. above prior to the termination of the required relationship with **Your Organization**, but only with respect to the performance of his or her duties as such on behalf of **Your Organization**;
6. The estate, heirs, executors, administrators, assigns, and legal representatives of any of **You** in the event of **Your** death, incapacity, insolvency, or bankruptcy, but only to the extent that **You** would otherwise be provided coverage under this insurance;
7. Any agent or independent contractor, including any distributor, licensee, or sub-licensee, but only while acting on **Your** behalf and at **Your** direction; and
8. In the event that the **Named Insured** is a sole proprietorship or partnership, the lawful spouse of any owner, but only for liabilities arising out of the conduct of **Your Organization's** business; and
9. Any person or legal entity with whom the **Named Insured** has agreed by written contract to add as an additional assured, but solely with respect to **Damages** or **Claims Expenses** that arise out of an actual or alleged **Privacy Breach**, **Security Breach**, **Security Wrongful Act**, or **Multimedia Wrongful Act** by the **Named Insured** in the performance of the **Named Insured's** ongoing operations for such person or legal entity.

Your Computer System means a **Computer System**, over which **You** have direct operational control or that is under the direct operational control of a **Service Provider**.

VI. LIMITS OF LIABILITY

A. The **Policy Aggregate Limit of Liability** indicated in the Declarations is the most **We** will pay in the aggregate under this Policy, under all coverages combined (except for Coverage B.), for all **Loss**, **Damages**, **Claim Expenses**, and **PCI DSS Assessments**, regardless of the number of **Claims**, **Privacy Breaches, Security Breaches, Cyber Extortion Threats**, **Covered Causes of Loss**, or **Losses**.

B. When purchased as indicated in the Declarations, the amount shown in the "Limits and Sublimits by Coverage" section of the Declarations is the most **We** will pay for each **Claim**, **Privacy Breach**, **Security Breach**, **PCI DSS Assessment, Cyber-Extortion Threat, Covered Cause of Loss** or **Loss**. A limit or sublimit of NIL or N/A indicates that a particular Coverage has not been purchased. If applicable, the amount indicated as the aggregate limit or aggregate sublimit is the most **We** will pay for all **Claims**, **Privacy Breaches, Security Breaches, PCI DSS Assessments, Cyber-Extortion Threats, Covered Causes of Loss**, or **Loss** under each Coverage.

C. If any single **Loss** or **Claim** is covered under more than one Coverage, the highest applicable sublimit of liability is the most **We** will pay as to such **Loss** or **Claim**.

VII. RETENTIONS

We will only pay **Damages, Claim Expenses**, **Loss, Breach Response Services,** and **PCI DSS Assessments** in excess of any applicable Retention. The Retention for each Coverage is stated in the Declarations. Such Retention(s) must be paid by **You** and cannot be insured.

With respect to **Business Income Loss** under Coverage E., if the **Network Disruption** has exceeded the **Waiting Period**, then **Business Income Loss** will be subject to the applicable monetary Retention amount set forth in the Declarations and shall be computed as of the commencement of the **Network Disruption.**

If a **Claim** or **Covered Cause of Loss** is covered under more than one Coverage, the single highest Retention shall be the only one applicable. This provision shall not affect the applicability or size of the **Waiting Period**.

VIII. EXTENDED REPORTING PERIOD

A. Basic **Extended Reporting Period**: In the event of cancellation or non-renewal of this Policy by **You** or **Us**, an **Extended Reporting Period** of sixty (60) days immediately following such cancellation or non-renewal shall be automatically granted hereunder at no additional premium. Such **Extended Reporting Period** shall cover **Claims** first made and reported to **Us** during such sixty (60) day **Extended Reporting Period** but only in respect of any act, error, or omission committed prior to the date of cancellation or non-renewal, and subject to all other terms, conditions, and exclusions of this Policy. No **Claim** in such sixty (60) day **Extended Reported Period** shall be covered under this Policy if **You** are entitled to indemnity under any other insurance or would have been entitled to indemnity under such insurance but for the exhaustion thereof.

B. Optional **Extended Reporting Period**: In the event of cancellation or non-renewal of this Policy by **You** or **Us**, **You** shall have the right, upon payment in full and not proportionally or otherwise in part of the percentage of the annual premium (as indicated on the Declarations for Extended Reporting Period), to have issued an endorsement providing an optional **Extended Reporting Period** from the cancellation or non-renewal date:

2. Such Optional **Extended Reporting Period** shall cover **Claims** made and reported to **Us** during this optional **Extended Reporting Period**, but only in respect of any **Claim** arising out of any act, error, or omission committed prior to the date of cancellation or non-renewal, and subject to all other terms, conditions, and exclusions of the Policy.

3. In order for **You** to invoke the Optional **Extended Reporting Period**, the payment of additional premium as stated in this provision must be paid to **Us** within thirty (30) days of the non-renewal or cancellation.

4. At the commencement of the Optional **Extended Reporting Period**, the entire premium shall be deemed fully earned, and in the event **You** terminate the optional **Extended Reporting Period** for whatever reason prior to its natural expiration, **We** will not be liable to return any premium paid for the optional **Extended Reporting Period**.

C. Terms and conditions of Basic and Optional **Extended Reporting Period**:

1. At renewal of this Policy, **Our** quotation of different premium, retention, or limit of indemnity or changes in Policy language shall not constitute non-renewal by **Us** for the purposes of granting the Optional **Extended Reporting Period.**
2. The right to the **Extended Reporting Period** shall not be available to **You** where **We** cancel or non-renew due to non-payment of premium.
3. The limit of liability for the **Extended Reporting Period** shall be part of, and not in addition to, the limit of liability for the **Policy Period**.
4. All notices and premium payments with respect to the **Extended Reporting Period** shall be directed to **Us** through your insurance broker.

IX. TERMS AND CONDITIONS

NOTICE

1. If any **Claim** is made against **You** during the **Policy Period**, then as soon as practicable after any member of **Your Control Group** first becomes aware of such **Claim**, **You** must forward to **Us (**through the persons or entity identified in the Declarations as "Notice of Claim, Circumstance or Loss") every demand, notice, summons, or other process **You** or **Your** representative receive. In no event shall **We** be given notice of a **Claim** later than the end of the **Policy Period**, the end of the Basic or Optional **Extended Reporting Period** (if applicable), or thirty (30) days after the expiration date of the **Policy Period** in the case of **Claims** first made against **You** during the last thirty (30) days of the **Policy Period**.
2. If, during the **Policy Period**, any member of **Your Control Group** first becomes aware of any act, error, or omission that might reasonably give rise to a **Claim, You** must give written notice to **Us** (through the persons or entity identified in the Declarations as "Notice of Claim, Circumstance or Loss") as soon as practicable during the **Policy Period** of:
   a. The specific details of the act, error, or omission that might reasonably give rise to a **Claim**;
   b. The possible **Damages** which may result or have resulted from the act, error, or omission;
   c. The facts by which **You** first became aware of the act, error, or omission; and
   d. Any **Computer System** security and event logs which provide evidence of the act, error, or omission.

   Any subsequent **Claim** made against **You** arising out of such act, error, or omission which is the subject of the written notice will be deemed to have been made at the time written notice complying with the above requirements was first given to **Us.**
3. If during the **Policy Period**, any member of **Your Control Group** first becomes aware of a **Privacy Breach**, **Security Breach, Cyber Extortion Threat, Loss** or **Covered Cause of Loss, You** must give written notice to **Us (**through the persons or entity identified in the Declarations as "Notice of Claim, Circumstance or Loss") as soon as practicable during the **Policy Period.** This includes when any member of **Your Control Group** first becomes aware of or has any knowledge of any act, omission or event which could reasonably be foreseen to give rise to a **Crime Loss** or **Invoice Manipulation Loss** covered under this Policy, even though the exact amount or details of such **Crime Loss** or **Invoice Manipulation Loss**, act, omission or event are not known at such date. Any **Claim** arising out of such **Privacy Breach**, **Security Breach, Cyber Extortion Threat, Loss** or **Covered Cause of Loss** will be deemed to have been made at the time notice of such **Privacy Breach**, **Security Breach, Cyber Extortion Threat, Loss** or **Covered Cause of Loss** was provided to **Us.**
4. A **Claim** shall be considered to be reported to **Us** when notice is first given to **Us** through the persons or entity identified in the Declarations as "Notice of Claim, Circumstance or Loss" or when notice of a wrongful act which

might reasonably give rise to a **Claim** is first provided in compliance with paragraph 2. above.

5. If **You** report any **Claim** or request any payment under this Policy knowing such **Claim** or request to be false or fraudulent, as regards amounts or otherwise, this Policy shall become null and void and all coverage hereunder shall be forfeited.

6. Whenever coverage under this Policy would be lost because of non-compliance with paragraph 1. above relating to the giving of notice of **Claim** to **Us** with respect to which any other of **You** shall be in default solely because of the failure to give such notice, or concealment of such failure by one or more of **You** responsible for the loss or damage otherwise insured hereunder, then **We** agree that such insurance as would otherwise be afforded under this Policy shall cover and be paid with respect to those of **You** who did not personally commit or personally participate in committing or personally acquiesce in such failure to give notice, provided that those of **You** entitled to the benefit of this provision have complied with such condition promptly after obtaining knowledge of the failure of any others of **You** to comply therewith, and any such **Claim** was reported during the **Policy Period** or **Extended Reporting Period**, if applicable.

However, such insurance as afforded by this provision shall not cover a **Claim** against **Your Organization** if any member of **Your Control Group** failed to give notice as required hereunder for a **Claim** against **Your Organization** arising from acts, errors, or omissions that were known to any member of **Your Control Group**.

DUTIES IN THE EVENT OF A LOSS

You must see that the following are done if **You** send **Us** a loss notification:

1. At **Our** request, notify the police, FBI, CERT, or other applicable law enforcement authority, central reporting, or investigative organization that **We** may designate, if it appears that a law may have been broken;
2. Immediately take all reasonable steps and measures necessary to limit or mitigate the **Loss**;
3. Send **Us** copies of every demand, notice, summons, or any other applicable information **You** receive;
4. If requested, permit **us** to question **You** under oath at such times and places as may be reasonably required about matters relating to this insurance, including **Your** books and records;
5. Send us a sworn proof of loss containing the information **We** request to resolve, settle, or otherwise handle the **Loss**. **We** will provide **You** with the necessary forms;
6. Cooperate with **Us** and counsel **We** may appoint in the investigation of any **Loss** covered by this Policy;
7. Assist **Us** and counsel **We** may appoint in the investigation or settlement of any **Losses**;
8. Assist **Us** in protecting and enforcing any right of subrogation, contribution, or indemnity against any person, organization, or other entity that may be liable to **You**, including attending depositions, hearings, and trials; and
9. Otherwise assist in securing and giving documentation and evidence, and obtaining the attendance of witnesses.

CONDITIONS APPLICABLE TO COVERAGE E. BUSINESS INCOME LOSS AND SUPPLEMENTAL COVERAGE K. REPUTATIONAL HARM

Regarding **Business Income Loss** under Coverage E., the actual **Earnings Loss** shall be proven, at **Your** expense, and calculated on an hourly basis. **We** will reimburse **You** for these costs to the extent covered under the Claims Preparation Costs of Coverage K. Supplemental Coverages. In determining the amount of actual **Earnings Loss**, due consideration shall be given to the experience of **Your** business during the **Period of**

Restoration, and to the probable business **You** could have reasonably performed had no **Network Disruption** occurred.

Earnings Loss shall be reduced to the extent **You** are able to, or should have been able to with the exercise of due diligence and dispatch, in whole or in part, end, reduce or limit the **Period of Restoration,** or conduct **Your** business by means other than through the use of **Your Computer System** or the affected portion thereof.

Regarding **Consequential Reputational Loss**, the actual financial harm shall be proven at **Your** expense and calculated on an hourly basis. We will reimburse **You** for these costs to the extent covered under the **Claims Preparation Costs** of Coverage **K. Supplemental Coverages**. In determining the amount of actual financial harm, due consideration shall be given to the experience of **Your** business during the **Reputational Risk Period**, and to the probable business **You** could have reasonably performed had no **Privacy Breach** or **Security Breach** occurred.

ASSISTANCE AND COOPERATION

1. **You** shall cooperate with **Us** in all investigations. **You** shall execute or cause to be executed all papers and render all assistance as requested by **Us.** Part of this assistance may require **You** to provide soft copies of **Your** system security and event logs.
2. Upon **Our** request, **You** shall assist in making settlements, in the conduct of suits and in enforcing any right of contribution or indemnity against any person or organization who may be liable to **You** because of acts, errors, or omissions with respect to which insurance is afforded under this Policy; and **You** shall attend hearings and trials and assist in securing and giving evidence and obtaining the attendance of witnesses.
3. **You** shall not admit liability, make any payment, assume any obligation, incur any expense, enter into any settlement, stipulate to any judgment or award, or dispose of any **Claim** without **Our** written consent, unless otherwise provided under Section II., in the definition of **Breach Response Services**, in the definition of **Expenses Loss**, or in the definition of **Restoration Costs**.
4. As soon as practicable after **You** give **Us** notice of any **Claim**, **Covered Cause of Loss**, circumstance, or **Privacy Breach, Security Breach, Cyber Extortion Threat, Loss** or **Security Wrongful Act**, **You** must also give **Us** copies of reports, photographs, investigations, pleadings, and all other papers in connection therewith, including allowing **Us** to question **You** under oath at such times as may be reasonably required regarding **Your Organization's** books, records, and any other matters relating to such **Privacy Breach, Security Breach, Cyber Extortion Threat, Loss, Security Wrongful Act, Covered Cause of Loss,** or **Claim**.
5. In the event of a **Loss, Cyber Extortion Threat, Privacy Breach, Security Breach** or **Security Wrongful Act**, **You** must take all reasonable steps to protect **Computer Systems** and personally identifiable, non-public information from further access, disclosure, loss, or damage.

SUBROGATION

In the event of any payment under this Policy, **You** agree to give **Us** the right to any subrogation and recovery to the extent of **Our** payments. **You** agree to execute all papers required and do everything that is reasonably necessary to secure these rights to enable us to bring suit in **Your** name. **You** agree to fully cooperate in **Our** prosecution of that suit. **You** agree not to take any action that could impair **Our** right of subrogation without **Our** written consent whether or not **You** have incurred any un-reimbursed payment; however, this provision shall not apply when **You** have waived such rights in a written contract entered into before any **Claim** or before any member of **Your Control Group** first became aware of any act, error, or omission that might reasonably give rise to a **Claim**. Any recoveries shall be applied first to subrogation expenses, second to **Breach Response Services**, **Loss, PCI**

DSS Assessments, Damages, and **Claim Expenses** paid by **Us**, and third to the Retention. Any additional amounts recovered shall be paid to **You**.

ACTION AGAINST US

No action shall lie against **Us** or **Our** representatives unless, as a condition precedent thereto: (1) there shall have been full compliance with all terms of this insurance; and, (2) until the amount of **Your** obligation to pay shall have been finally determined either by judgment or award against **You** after trial, regulatory proceeding, arbitration, or by written agreement between **You**, the claimant, and **Us.**

Any person or organization or the legal representative thereof who has secured such judgment, award, or written agreement shall thereafter be entitled to make a claim under this Policy to the extent of the insurance afforded by this Policy. No person or organization shall have the right under this Policy to join **You** as a party to an action or other proceeding against **Us** to determine **Our** liability, nor shall **We** be impleaded by **You** or **Your** legal representative.

Your bankruptcy or insolvency shall not relieve **Us** of **Our** obligations hereunder.

DISPUTE RESOLUTION

1. Except as provided below, any dispute arising out of or relating to this Policy will be referred to a qualified mediator in a good faith effort to negotiate a resolution of the dispute, prior to the initiation of any litigation or other proceedings. In the event mediation cannot resolve the dispute, at **Your** request, **We** will agree to submit to a court of competent jurisdiction within the United States. **Our** agreement, however, does not constitute a waiver of **Our** rights to commence an action in any court of competent jurisdiction in the United States, remove an action to any district court, or seek to transfer a case to another court as permitted by the laws of the United States or any state in the United Sates. **We** appoint the persons or entity named in the "Service of Suit" section of the Declarations to accept service of process on **Our** behalf.
2. If the **Named Insured** and **We** do not agree on the amount of **Business Income Loss** or **Reputational Harm**, either party may make a written demand for an appraisal. If such demand is made, each party will select a competent and impartial appraiser. The appraisers will then jointly select an umpire. If the appraisers cannot agree on an umpire, they may request that such selection be made by a judge of a court having jurisdiction. Each appraiser will separately state the amount of the loss. If the appraisers do not agree on the amount of the loss, they will submit their differences to the umpire. Agreement by the umpire and at least one of the appraisers regarding the amount of the loss will be binding on **You** and **Us**. Each party will pay their respective chosen appraiser and will equally share the costs of the umpire.
3. No person or organization will have any right under this Policy to join **Us** as a party to any action against **You** to determine **Your** liability.

OTHER INSURANCE

This insurance shall apply in excess of any other valid and collectible insurance available to **You**, including any retention or retention portion thereof, unless such other insurance is written only as specific excess insurance over any limit of liability of this Policy; provided, however, that this insurance shall be considered primary solely with respect to **Breach Response Services** in connection with a covered **Security Breach** or **Privacy Breach** with respect to **Private Information**.

ENTIRE AGREEMENT

By acceptance of the Policy, **You** agree that this Policy embodies all agreements between **You** and **Us** relating to this insurance. Notice to any agent or knowledge possessed by any agent or by any other person shall not effect a

waiver or a change in any part of this Policy or stop **Us** from asserting any right under the terms of this Policy; nor shall the terms of this Policy be waived or changed, except by endorsement issued to form a part of this Policy signed by **Us**.

NEW SUBSIDIARIES/CHANGES IN NAMED INSURED OR YOUR ORGANIZATION

1. During the **Policy Period**, if **You** acquire another corporation whose annual revenues are more than fifteen percent (15%) of **Your Organization's** annual revenues as set forth in its most recent audited financial statements there shall be no coverage under this Policy for acts, errors, or omissions committed or allegedly committed by the newly acquired **Subsidiary** unless **You** give **Us** written notice of the acquisition containing full details thereof, and **We** have agreed to add coverage for the newly acquired **Subsidiary** upon such terms, conditions, and limitations of coverage and such additional premium as **We**, in **Our** sole discretion, may require.
2. During the **Policy Period**, if the **Named Insured** consolidates or merges with or is acquired by another entity, or sells substantially all of its assets to another entity, or a receiver, conservator, trustee, liquidator, or rehabilitator, or any similar official is appointed for or with respect to the **Named Insured**, then all coverage under this Policy shall continue to the expiration of the **Policy Period** but only for losses, acts, errors, or omissions that occurred prior to the date of such consolidation, merger or appointment unless **We**, by endorsement to this policy**,** have agreed in writing to waive this provision after reviewing the details of such a transaction.
3. Should a corporation cease to be a **Subsidiary** after the inception date of this Policy, coverage with respect to such corporation shall continue as if it was still a **Subsidiary** until the expiration date of this policy, but only with respect to a **Claim** that arises out of any act, error, or omission committed such corporation prior to the date that it ceased to be a **Subsidiary**.
4. All notices and premium payments made under this paragraph shall be directed to **Us** through the entity listed as **Named Insured** in the Declarations.

ASSIGNMENT

Your interest under this Policy may not be assigned to any other person or organization, whether by operation of law or otherwise, without **Our** written consent. If **You** shall die or be adjudged incompetent, such insurance shall cover **Your** legal representative as **You** as would be covered under this Policy.

CANCELLATION

1. This Policy may be cancelled by **You**, by surrender thereof to **Us** or by mailing to **Us** through your insurance broker, written notice stating when the cancellation shall be effective.
2. This Policy may be cancelled by **Us** by mailing to **You** at the address shown in the Declarations written notice stating when, not less than sixty (60) days thereafter, such cancellation shall be effective. However, if **We** cancel this Policy because **You** have failed to pay a premium when due, this Policy may be cancelled by **Us** by mailing a written notice of cancellation to **You** at the address shown in the Declarations stating when, not less than ten (10) days thereafter, such cancellation shall be effective. Mailing of notice shall be sufficient proof of notice. The time of surrender or the effective date and hour of cancellation stated in the notice shall become the end of the **Policy Period**. Delivery (where permitted by law) of such written notice either by **You** or by **Us** shall be equivalent of mailing.
3. If **You** cancel this Policy, the earned premium shall be computed in accordance with the Lloyd's short rate table and procedure, provided that the premium shall be deemed fully earned if any **Claim** has been notified to **Us** under this Policy. In that event, **We** agree that the Policy will not be cancelled midterm solely on the

basis of any valid **Claim** notified to **Us**.

4. If **We** cancel this Policy prior to any **Covered Cause of Loss, Claim, Privacy Breach, Security Breach, Loss**, or **Cyber Extortion Threat** being reported under this Policy, the earned premium shall be computed pro rata. The premium shall be deemed fully earned if any **Covered Cause of Loss, Claim, Privacy Breach, Security Breach, Security Wrongful Act, Multimedia Wrongful Act, Loss,** or **Cyber Extortion Threat** under this Policy is reported to **Us** on or before the date of cancellation.
5. Premium adjustment may be made either at the time cancellation is effected or as soon as practicable after cancellation becomes effective, but payment or tender of unearned premium is not a condition of cancellation.

WORDS AND TITLES OF PARAGRAPHS

The titles of paragraphs, section, provisions, or endorsements of or to this Policy are intended solely for convenience and reference, and are not deemed in any way to limit or expand the provisions to which they relate and are not part of the Policy. Whenever the singular form of a word is used herein, the same shall include the plural when required by context.

NAMED INSURED AUTHORIZATION

The **Named Insured** specified in the Declarations has the right and duty to act on **Your** behalf for:

1. The giving and receiving of notice of cancellation;
2. The payment of premiums, including additional premiums;
3. The receiving of any return premiums;
4. The acceptance of any endorsements added after the effective date of coverage;
5. The payment of any Retentions;
6. The receiving of any **Loss** payments; and
7. Otherwise corresponding with **Us**.

WARRANTY BY YOU

By acceptance of this Policy, **You** agree that the statements contained in the **Application**, any **Application** for coverage of which this Policy is a renewal, and any supplemental materials submitted therewith, are **Your** agreements and representations, that they shall be deemed material to the risk assumed by **Us**, and that this Policy is issued in reliance upon the truth thereof.

The misrepresentation or non-disclosure of any matter by **You** or **Your** agent in the **Application**, any **Application** for coverage of which this Policy is a renewal, or any supplemental materials submitted therewith will render the Policy null and void and relieve **Us** from all liability under the Policy.

The **Application** and any **Application** for coverage of which this Policy is a renewal, and any supplemental materials submitted therewith, are deemed incorporated into and made a part of this Policy.

SERVICE OF SUIT CLAUSE (U.S.A.)

1. It is agreed that, in the event of **Our** failure to pay any amount claimed to be due under this Policy, at **Your** request **We** will submit to the jurisdiction of a court of competent jurisdiction within the United States. Nothing in this clause constitutes or should be understood to constitute a waiver of **Our** rights to commence an action in any court of competent jurisdiction in the United States, to remove an action to a United States District Court, or seek a transfer of a case to another court as permitted by the laws of the United States or any state in the United States. It is further agreed that service of process in such suit may be made upon **Our** representative, designated at the “Service of Suit” section of the Declarations, and that in any suit instituted

against any one of **Us** upon this contract, **We** will abide by the final decision of such court or of any appellate court, in the event of an appeal.

2. **Our** representative designated at the "Service of Suit" section of the Declarations is authorized and directed to accept service of process on **Our** behalf in any such suit and/or upon **Your** request to give a written undertaking to **You** that they will enter a general appearance upon **Our** behalf in the event such a suit shall be instituted.

3. Pursuant to any statute of any state, territory, or district of the United States which makes provision therefore, **We** hereby designate the Superintendent, Commissioner, or Director of Insurance or other officer specified for that purpose in the statute, or his successor in office, as **Our** true and lawful attorney upon whom may be served any lawful process in any action, suit, or proceeding instituted by or on behalf of **You** or any beneficiary hereunder arising out of this Policy, and hereby designate **Our** representative listed at the "Service of Suit" section of the Declarations as the person to whom the said officer is authorized to mail such process or a true copy thereof.

CHOICE OF LAW

Any disputes involving this Policy shall be resolved by applying the law of the jurisdiction designated as "Choice of Law" in the Declarations.

CONDITIONS APPLICABLE TO COVERAGE H. CYBER CRIME

The coverage under Coverage H. **Cyber Crime** shall only apply for the theft of funds and assets: (i) owned by **You**; or (ii) in which **You** have an interest;

In no event shall **We** be liable under Coverage H. **Cyber Crime** for more than:

1. the fair market value, determined by the closing sale price as reported on the principal national securities market in which trading occurs, of securities, foreign funds, currencies or precious metals at the close of business on the last market trading day before the loss is discovered, or, if less, the actual cost of replacing securities (if applicable);

2. the cost of blank books, blank pages or other materials plus the cost of labor and computer time for the actual transcription or copying of data furnished by **You** in order to reproduce books of accounts and records;

3. the cost of labor for the actual transcription or copying of electronic data furnished by **You**, in order to reproduce such electronic data;

4. the actual cash value of other property at the time of loss or the actual cost of repairing or replacing the property with property or material of like quality or value, whichever is less. The actual cash value of other property if held by **You** as a pledge, or as collateral for an advance or a loan, shall be considered not to exceed the value of the property as determined and recorded by the insured when making the advance or loan, or in the absence of a record, the unpaid portion of the advance or loan plus accrued interest at applicable rates.

WH 26-8 Introduce: 4-23-26

RESOLUTION NO.

BE IT RESOLVED by the Board of Representatives of the West Haymarket Joint Public Agency:

That the attached Amendment to Memorandum of Understanding for Electrical Equipment, Bulbs, and Ballasts (MOU186) between the West Haymarket Joint Public Agency, the City of Lincoln, Lancaster County, City of Lincoln-Lancaster County Public Building Commission, and Voss Electric Company dba Voss Lighting for an extended term beginning March 1, 2026 through June 17, 2026 under the same terms and conditions, and with costs for the extended term not to exceed $5,000.00, is hereby approved and the Chairperson of the West Haymarket Joint Public Agency Board of Representatives is hereby authorized to execute said Amendment on behalf of the JPA.

Adopted this _____ day of April, 2026.

Introduced by:

_____

West Haymarket Joint Public Agency
Board of Representatives

Approved as to Form & Legality:

_____
Legal Counsel for
West Haymarket Joint Public Agency

_____
Leirion Gaylor Baird

_____
Tim Clare

_____
Tom Beckius

AMENDMENT TO MEMORANDUM OF UNDERSTANDING
Electrical Equipment, Bulbs and Ballasts
Region 14 ESC – TX Contract No. 02-83
MOU186
City of Lincoln, Lancaster County,
City of Lincoln-Lancaster County Public Building Commission (PBC)
and West Haymarket Joint Public Agency (WHJPA)
Extension
Voss Lighting

This Amendment is hereby entered into by and between Voss Electric Company dba Voss Lighting, 5656 N Sam Houston Pkwy E, Suite 180, Houston, TX 77032 (hereinafter "Contractor") and the City of Lincoln, Lancaster County, City of Lincoln-Lancaster County Public Building Commission (PBC) and West Haymarket Joint Public Agency (WHJPA) (hereinafter "Owners"), for the purpose of amending the Memorandum of Understanding (MOU) dated April 17, 2024 executed under City Directorial Order No. 32119, and County Contract C-24-0285, dated April 16, 2024, and executed by the City of Lincoln-Lancaster County Public Building Commission (PBC), on May 14, 2024, for Electrical Equipment, Bulbs and Ballasts, MOU186, which is made a part of this amendment by this reference.

WHEREAS, the original term of the MOU is May 14, 2024 through August 31, 2024, with the option to renew for one (1) additional one (1) year term upon written mutual consent by all parties; and

WHEREAS, the MOU was amended by City Directorial Order No. 32823, executed by the City on August 6, 2024, and by County Contract C-24-0603 executed by the County Board on August 6, 2024, and executed by the City of Lincoln-Lancaster County Public Building Commission on August 13, 2024, to renew the contract for an additional one (1) year term from September 1, 2024 through August 31, 2025; and

WHEREAS, the MOU was amended by West Haymarket Joint Public Agency Order No. WH01455 to add JPA on August 29, 2024, for a term of September 1, 2024 through August 31, 2025; and

WHEREAS, the Lead Contract between Voss Electric Company dba Voss Lighting and Region 14 ESC – Texas, Contract No.02-83 was amended per Attachment A, to extend from September 1, 2025 through February 28, 2026 under the same terms and conditions; and

WHEREAS, the MOU was amended by City Directorial Order No. 35907, executed by the City on September 24, 2025, and by County Contract C-25-0760 executed by the County Board on September 30, 2025, and executed by the City of Lincoln-Lancaster County Public Building Commission on August 12, 2025, and by West Haymarket Joint Public Agency Order No. WH01522, executed on August 22, 2025, to extend the contract for an additional term, beginning September 1, 2025 through February 28, 2026; and

WHEREAS, the Lead Contract between Voss Electric Company dba Voss Lighting and Region 14 ESC – Texas, Contract No.02-83 was amended per Attachment B, to extend from March 1, 2026 through August 31, 2026 under the same terms and conditions; and

NOW, THEREFORE, IN CONSIDERATION of the mutual covenants contained in the Contract under City Directorial Order No. 32119, County Contract C-24-0285, and WHJPA Order No. WH01455 all amendments thereto, and as stated herein, the parties agree as follows:

1) The parties hereby extend the MOU for an additional term beginning March 1, 2026 through June 17, 2026.
2) The expenditures for the City of Lincoln for the term of this extension shall not exceed $15,000.00 without approval by the City of Lincoln.
3) The expenditures for Lancaster County for the term of this extension shall not exceed $5,000.00 without approval by the Lancaster County Board.

4) The expenditures for the City of Lincoln-Lancaster County Public Building Commission for the term of this extension shall not exceed $3,000.00 without approval by the PBC.
5) The expenditure for the West Haymarket Joint Public Agency for the term of this extension shall not exceed $5,000.00 without approval by the WHJPA
6) All other terms of the MOU, not in conflict with this Amendment, shall remain in force and effect.

The Parties do hereby agree to all the terms and conditions of this Amendment. This Amendment shall be binding upon the parties, their heirs, administrators, executors, legal and personal representatives, successors, and assigns.

IN WITNESS WHEREOF, the Parties do hereby execute this Amendment upon completion of signatures on:

Vendor Signature Page
City of Lincoln Signature Page
Lancaster County Signature Page
City of Lincoln-Lancaster County Public Building Commission Signature Page
West Haymarket Joint Public Agency Signature Page

Tracking No. 26020090

Vendor Signature Page

AMENDMENT TO MEMORANDUM OF UNDERSTANDING
Electrical Equipment, Bulbs and Ballasts
Region 14 ESC – TX Contract No. 02-83
MOU186
City of Lincoln, Lancaster County,
City of Lincoln-Lancaster County Public Building Commission (PBC)
and West Haymarket Joint Public Agency (WHJPA)
Extension
Voss Lighting

Please sign, date and return within 2 days of receipt.

Mail to: City/County Purchasing
Attn: Lori L. Irons
440 So. 8th St., Ste. 200
Lincoln, NE 68508
Or email to: llirons@lincoln.ne.gov

Company Name:	Voss Electric Co. d.b.a. Voss Lighting
By: (Please Sign)	Robert Jensen
By: (Please Print)	Robert Jensen
Title:	President
Company Address:	5200 S 16th St Lincoln, NE 68512
Company Phone & Fax:	402-328-2281
E-Mail Address:	
Date:	2/18/2026
Contact Person for Orders or Service	
Contact Phone Number:	

AMENDMENT TO MEMORANDUM OF UNDERSTANDING
Electrical Equipment, Bulbs and Ballasts
Region 14 ESC – TX Contract No. 02-83
MOU186
City of Lincoln, Lancaster County,
City of Lincoln-Lancaster County Public Building Commission (PBC)
and West Haymarket Joint Public Agency (WHJPA)
Extension
Voss Lighting

EXECUTION BY THE WEST HAYMARKET JOINT PUBLIC AGENCY

ATTEST:

_____
City Clerk

West Haymarket Joint Public Agency

_____
Leirion Gaylor Baird, Chairperson of the West Haymarket Joint Public Agency Board of Representatives

APPROVED BY:

Order No._____

dated _____

WH 26-9 Introduce: 4-23-26

RESOLUTION NO.

BE IT RESOLVED by the Board of Representatives of the West Haymarket Joint Public Agency:

That the attached Memorandum of Understanding for Light Bulbs, Ballasts, and Retrofit Kits (MOU241) between the West Haymarket Joint Public Agency, the City of Lincoln, Lancaster County, City of Lincoln-Lancaster County Public Building Commission, and Voss Electric Company dba Voss Lighting for a term beginning June 18, 2026 through June 17, 2027, with costs not to exceed $20,000.00, is hereby approved and the Chairperson of the West Haymarket Joint Public Agency Board of Representatives is hereby authorized to execute said Memorandum of Understanding on behalf of the JPA.

Adopted this _____ day of April, 2026.

Introduced by:

_____

Approved as to Form & Legality:

West Haymarket Joint Public Agency
Board of Representatives

_____
Legal Counsel for
West Haymarket Joint Public Agency

_____
Leirion Gaylor Baird

_____
Tim Clare

_____
Tom Beckius

Tracking No. 26020091

MEMORANDUM OF UNDERSTANDING FOR CITY OF LINCOLN, LANCASTER COUNTY, NEBRASKA, CITY OF LINCOLN-LANCASTER COUNTY PUBLIC BUILDING COMMISSION (PBC) and WEST HAYMARKET JOINT PUBLIC AGENCY (WHJPA) COOPERATIVE CONTRACT

Contract Title: Light Bulbs, Ballasts and Retrofit Kits

Lead Entity: State of Nebraska Contract 16169 OC

THIS MEMORANDUM OF UNDERSTANDING (MOU) is hereby issued to **Voss Electric Company, DBA Voss Lighting, 5200 S. 16th Street, PO Box 22159, Lincoln, NE 68542-2159** hereinafter called "Contractor", from the City of Lincoln, Nebraska, a municipal corporation, and the County of Lancaster, Nebraska, a political subdivision of the State of Nebraska, and the City of Lincoln-Lancaster County Public Building Commission hereinafter called the "Owners" for the purpose of the Contractor and the Owners agreeing to the terms and conditions provided in this MOU.

The Contractor and the Owners hereby agree to the following supplemental Terms and Conditions from those in the Lead Contract listed above.

Lead Contract Contact: Voss Electric Company, dba Voss Lighting

Name: Mike Little

Phone Number: 402-416-4051

Email Address: mike.little@vosslighting.com

TERMS AND CONDITIONS

A. TERM OF THE CONTRACT

The Owners shall participate in the Lead Contract for Light Bulbs, Ballasts and Retrofit Kits. The MOU will be effective beginning June 18, 2026 through June 17, 2027. Upon conclusion of the initial term, the Owners have the option of renewing for two (2) additional one (1) year terms under the same terms and conditions according to the renewals allowed by the Lead Contract. The Owners then have the option of renewal for two (2) additional one (1) year terms under the same terms and conditions according to the renewals allowed by the Lead Contract if the State of Nebraska renews for two (2) additional one (1) year terms.

In the event the Parties hereto communicate in writing their mutual desire to renew the MOU for an additional term not more than one hundred twenty (120) days prior to expiration of the MOU, a renewal agreement shall be prepared by the Owners for execution by all Parties. In the further event the agreed upon renewal agreement is not fully executed by all Parties prior to the expiration date of this MOU this Agreement shall be automatically extended for sixty (60) days beyond the expiration date to allow for completion of the renewal process. The expiration date of the renewal Agreement shall be one year from the date of expiration of the preceding term. This clause shall survive expiration of the original Agreement or any renewal thereof. The Owners reserve the right to extend the MOU beyond the renewal term upon written approval by all parties.

B. SCOPE

The Contractor shall provide the same scope of services and provide the same products as set forth in the Lead Contract.

C. PRICING

Pricing for these goods and/or services shall be pursuant to the Lead Contract, a copy thereof is attached to this Memorandum

The City will pay for service according to the pricing as listed in the Lead Contract, a copy thereof being attached to and made a part of this MOU. The City shall order on an as-needed basis for the duration of the MOU. The cost of services for City Departments shall not exceed $45,000.00 during the MOU term without approval by the City of Lincoln.

Lancaster County will pay for service according to the pricing as listed in the Lead Contract, a copy thereof being attached to and made a part of this MOU. The County shall order on an as-needed basis for the duration of the MOU. The cost of services for County Departments shall not exceed $20,000.00 during the MOU term without approval by the Board of Commissioners.

The PBC will pay for service according to the pricing as listed in the Lead Contract, a copy thereof being attached to and made a part of this MOU. The PBC shall order on an as-needed basis for the duration of the MOU. The cost of services for PBC Departments shall not exceed $10,000.00 during the MOU term without approval by the Public Building Commission.

The WHJPA will pay for service according to the pricing as listed in the Lead Contract, a copy thereof being attached to and made a part of this MOU. The WHJPA shall order on an as-needed basis for the duration of the MOU. The cost of services for WHJPA Departments shall not exceed $20,000.00 during the MOU term without approval by the WHJPA Board of Representatives.

D. CONFLICTING TERMS

To the extent terms and conditions herein conflict with or contravene terms and conditions in the Lead Contract, the terms of the Lead Contract shall control. To the extent the terms and conditions of the Lead Contract are silent as to any provision or permit the Contractor to agree to terms with an End User, this MOU shall control in the priority as set forth in Paragraph "D" below.

E. MOU DOCUMENTS

The following documents comprise the Memorandum of Understanding:

1. This Memorandum of Understanding and associated Terms and Conditions;
2. State of NE Contract 16169 OC
3. Foreign Adversary Contracting Prohibition Act Certification
4. Tax Forms

F. LAWS

The Laws of the State of Nebraska shall govern the rights, obligations, and remedies of the Parties under this Memorandum of Understanding. During the term of the MOU, the Contractor shall perform all services and/or supply all goods in accordance with the established and applicable standards and in accordance with applicable State and Local laws.

G. IMPLIED REQUIREMENTS

All products and services not specifically mentioned in this document or the Lead Contract, but which are necessary to provide the functional capabilities described in the Lead Contract, shall be included**.**

H. CONTRACT MODIFICATION

The MOU shall be modified only by a written MOU amendment and approval of the parties. No alteration or variation of the terms and conditions of this Memorandum shall be valid unless made in writing and signed by the parties. Every amendment shall specify the date on which its provisions shall be effective.

I. TERMINATION

This MOU may be terminated by the following:

1. Termination for Convenience. Either party may terminate this MOU upon thirty (30) days written notice to the other party, for any reason, without penalty.
2. Termination for Cause. The Owners may terminate this MOU for cause if the Contractor:
    a. Refuses or fails to supply the proper labor, materials and equipment necessary to provide services and/or products pursuant to the Lead Contract or;

    b. Disregards Federal, State or local laws, ordinances, regulations, resolutions or orders or;
    c. Otherwise commits a substantial breach or default of any provision of the Lead Contract or this MOU. In the event of a substantial breach or default the Owners will provide the Contractor written notice of said breach or default and allow the Contractor ten (10) days from the date of the written notice to cure such breach or default. If said breach or default is not cured within ten (10) days from the date of notice, then the MOU shall terminate.

3. In the event that funding is not available to continue with services as written, the Owner(s) reserve the right to terminate use of the MOU for convenience with no financial obligation to the Contractor, Subcontractors or other stakeholders except for any amount due for services rendered or products supplied prior to notice of cancellation.

   The Owner(s) may terminate this MOU in whole or in part when funding is not lawfully available for expenditure or when sources of funding are terminated, suspended, reduced, or otherwise not forthcoming through no fault of the Owner(s). In the event of unavailability of funds to pay any amounts due under the MOU, the Owner(s) shall immediately notify the Contractor and the MOU shall terminate without penalty or expense to the Owner(s). Upon termination, the Owner(s) shall pay the Contractor for any approved and documented services or products completed or purchased up to the date of termination, but not to exceed the maximum amount allowed by the Lead Contract or this MOU.

J. SEVERABILITY

If any provision of this MOU is determined by a court of competent jurisdiction to be invalid or unenforceable to any extent, the remainder of the MOU shall not be affected and each provision of the MOU shall be enforced to the fullest extent permitted by law.

K. ASSIGNMENT

This MOU shall not be transferred to/or assigned to another Contractor without prior written consent confirming approval by the Owners. Any assignment without such prior written consent shall be absolutely void.

L. FORCE MAJEURE

Neither party shall be liable for any costs or damages from its inability to perform any of its obligations under the MOU due to a natural disaster, or other similar event outside the control and not the fault of the affected party ("Force Majeure Event"). A Force Majeure Event shall not constitute a breach of the Lead Contract or this MOU. The party so affected shall immediately give notice to the other party of the Force Majeure Event. The Owners may grant relief from performance of the MOU if the Contractor is prevented from performance by a Force Majeure Event. The burden of proof for the need for such relief shall rest on the Contractor. To be released based on a Force Majeure Event, the Contractor shall file a written request for relief with the City of Lincoln/Lancaster County Purchasing Division. Labor disputes with the impacted party's own employees will not be considered a Force Majeure Event and will not suspend performance requirements under the Contract.

M. ATTORNEY'S FEES

In the event of any litigation, appeal, or other legal action to enforce any provision of the MOU, the Contractor agrees to pay all expenses of such action, as permitted by law, including Attorney's fees and costs, if the Owner is the prevailing party.

N. OWNER INCLUSION

It is understood and agreed by all parties that "Owner/s" shall include the City of Lincoln, Lancaster County, Nebraska and Lincoln-Lancaster County Public Building Commission. Whenever in the Contract documents, a singular entity is referenced (i.e., "the City" or "the County" or "Building Commission") it shall mean the "Owners" encompassing the City of Lincoln, Lancaster County and Lincoln-Lancaster County Building Commission. Notwithstanding the foregoing, the duties and obligations of the City, the County, and the Building Commission pursuant to the MOU shall be treated as divisible and severable duties and obligations, and

default by any one of the City, the County, or the Building Commission shall not be attributed to any other of the Owners, but shall remain the sole obligation of the defaulting entity.

O. PAYMENT

Unless stated otherwise, the Owners will initiate payment within thirty (30) calendar days after:
1. All work has been performed and all equipment or other merchandise has been delivered.
2. All such labor and equipment and other materials have met all MOU specifications.
3. All such work has been approved by the Owner.
4. An invoice has been submitted which corresponds with the MOU amount and any subsequent changes approved by the Owners.

P. INSURANCE

The Contractor agrees to the insurance provisions required for all City/County and Building Commissions contracts (see *Insurance Requirements for City, County, and Building Commission*).

Q. TAXES AND TAX EXEMPTION CERTIFICATE

The Owners are generally exempt from any taxes imposed by the State or Federal government. A Tax Exemption Certificate will be provided as applicable.

The Water Division of the City of Lincoln is taxable per Reg. 066.14A and no exemption certificate will be issued.

R. INDEPENDENT CONTRACTOR

Employees of the Contractor shall not be deemed to be employees of the Owners and employees of the Owners shall not be deemed to be employees of the Contractor. The Contractor and the Owners shall be responsible to their respective employees for all salary and benefits. Neither the Contractor's employees nor the Owners' employees shall be entitled to any salary, wages, or benefits from the other party, including but not limited to overtime, vacation, retirement benefits, workers' compensation, sick leave or injury leave. Contractor shall also be responsible for maintaining workers' compensation insurance, unemployment insurance for its employees, and for payment of all federal, state, local and any other payroll taxes with respect to its employees' compensation.

S. FOREIGN ADVERSARY CONTRACTING PROHIBITION ACT CERTIFICATION

In accordance with the Foreign Adversary Contracting Prohibition Act, Neb. Rev. Stat. §73-901 to §73-907, a public entity shall require a company that submits a bid, or proposal, or enters into any contract or contract renewal with any public entity, to certify that the company is not a scrutinized company and will not subcontract with any scrutinized company for any aspect of performance of the contemplated contract; and that any products or services to be provided do not originate with a scrutinized company. As such the Contractor agrees to do one of the following:

(A) If the Contractor is providing technology related goods or services under the Act, Contractor agrees to complete and sign a Certification Form as provided by the Owners certifying that the Contractor is not a scrutinized company and attach it to the Agreement; or

(B) If the Contractor is not providing technology related goods or services under the Act, Contractor agrees to complete and sign a Certification Form as provided by the Owners certifying that the Contractor is not providing such services and is not subject to the Act; or

(C) If the Contractor is providing technology related goods under the Act, and Contractor is a scrutinized company that qualifies under Neb. Rev. Stat. §73-906(2) as an exception for the provision of manufactured goods only, Contractor agrees to complete and sign a Certification Form as provided by the Owners certifying that the contractor is a scrutinized company that meets the exception provided under the Act.

T. EQUAL EMPLOYMENT OPPORTUNITY

In connection with the carrying out of this project, the Contractor shall not discriminate against any employee or applicant for employment because of race, color, religion, sex, national origin, ancestry, disability, age or marital status. The Contractor will take affirmative action to ensure that applicants are employed, and that employees are treated during employment, without regard to their race, color, religion, sex, national origin, ancestry, disability, age or marital status. Such action shall include, but not be limited to, the following: employment, upgrading, demotion or transfer; recruitment or recruitment advertising; layoff or termination; rates of pay or other compensation; and selection for training, including apprenticeship.

U. LIVING WAGE

The Contractor agrees to pay all employees employed in the performance of the MOU according to the City Living Wage per Section 2.81 of the Lincoln Municipal Code. The wages listed in Section 2.81 are subject to change every July. This provision is only applicable to City of Lincoln projects.

V. E-VERIFY

In accordance with Neb. Rev. Stat. 4-108 through 4-114, the Contractor agrees to register with and use a federal immigration verification system, to determine the work eligibility status of new employees performing services within the state of Nebraska. A federal immigration verification system means the electronic verification of the work authorization program of the Illegal Immigration Reform and Immigrant Responsibility Act of 1996, 8 U.S.C 1324 a, otherwise known as the E-Verify Program, or an equivalent federal program designated by the United States Department of Homeland Security or other federal agency authorized to verify the work eligibility status of a newly hired employee pursuant to the Immigration Reform and Control Act of 1986. The Contractor shall not discriminate against any employee or applicant for employment to be employed in the performance of this section pursuant to the requirements of state law and 8 U.S.C.A 1324b. The contractor shall require any subcontractor to comply with the provisions of this section. For information on the E-Verify Program, go to www.uscis.gov/everify.

W. CITY AUDIT ADVISORY BOARD

All parties doing business with the Owners shall be subject to audit (City of Lincoln - Chapter 4.66 of the Lincoln Municipal Code) and shall make available to a Contract Auditor copies of all financial and performance related records and materials germane to the MOU/purchase order, as allowed by law.

X. INDEMNIFICATION

The Contractor shall indemnify and hold harmless the Owners from and against all losses, claims, damages, and expenses, including, attorney's fees arising out of or resulting from the performance of the MOU that results in bodily injury, sickness, disease, death, or to injury to or destruction of tangible property, including loss of use resulting therefrom and is caused in whole or in part by the Contractor, any subcontractor, any directly or indirectly employed by any of them or anyone for whose acts any of them may be liable. This section will not require the Contractor to indemnify or hold harmless the Owners for any losses, claims damages, and expenses arising out of or resulting from the sole negligence of the Owners.

In any and all claims against the Owners or any of its elected officials, members, officers or employees by an employee of the Contractor, any subcontractor, anyone directly or indirectly employed by any of them or by anyone for whose acts made by any of them may be liable, the

indemnification obligation listed herein shall not be limited in any way by any limitation of the amount or type of damages, compensation or benefits payable by or for the Contractor or any subcontractor under worker's compensation acts, disability benefit acts or other employee benefit acts.

Y. FOREIGN ADVISORY CONTRACTING PROHIBITION ACT CERTIFICATION

In accordance with the Foreign Adversary Contracting Prohibition Act, Neb. Rev. Stat. §73-901 to §73-907, a public entity shall require a company that submits a bid, or proposal, or enters into any contract or contract renewal with any public entity, to certify that the company is not a scrutinized company and will not subcontract with any scrutinized company for any aspect of performance of the contemplated contract; and that any products or services to be provided do not originate with a scrutinized company. As such the Contractor agrees to do one of the following:

(A) If the Contractor is providing technology related goods or services under the Act, Contractor agrees to complete and sign a Certification Form as provided by the City certifying that the Contractor is not a scrutinized company and attach it to the Agreement; or

(B) If the Contractor is not providing technology related goods or services under the Act, Contractor agrees to complete and sign a Certification Form as provided by the City certifying that the Contractor is not providing such services and is not subject to the Act; or

(C) If the Contractor is providing technology related goods under the Act, and Contractor is a scrutinized company that qualifies under Neb. Rev. Stat. §73-906(2) as an exception for the provision of manufactured goods only, Contractor agrees to complete and sign a Certification Form as provided by the City certifying that the contractor is a scrutinized company that meets the exception provided under the Act.

Z. WAIVER Owners' failure or neglect to enforce any of its rights under this Memorandum will not be deemed to be a waiver of the Owners' rights.

AA. THIRD PARTIES

This Memorandum is not intended to, and does not, create any rights or benefits on behalf of any person, whether an individual or an entity, other than the Parties involved. Owners shall not be obligated or liable hereunder to any person, whether an individual or an entity, other than Contractor.

This MOU, together with the Lead Contract Documents, are a part of the MOU as if fully incorporated herein.

The Contractor and the Owners hereby agree that all the terms and conditions of this MOU shall be binding upon themselves, and their heirs, administrators, executors, legal and personal representatives, successors, and assigns.

The Contractor hereby agrees to this MOU upon completion of signatures on the Vendor Signature Page.

Vendor Signature Page

Memorandum of Understanding
Light Bulbs, Ballasts and Retrofit Kits
State of Nebraska Contract 16169 OC
MOU241
City of Lincoln, Lancaster County, Nebraska,
City of Lincoln-Lancaster County Public Building Commission (PBC),
West Haymarket Joint Public Agency (WHJPA)
Voss Electric Company, dba Voss Lighting

EXECUTION BY CONTRACTOR

IF A CORPORATION:

Attest:

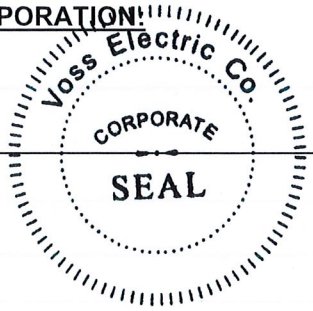

Secretary _____ Seal

Voss Electric Co. d.b.a. Voss Lighting
Name of Corporation

5200 S 16th St Lincoln, NE 68512
Address

By: Robert A Jansen
Duly Authorized Official

President
Legal Title of Official

IF OTHER TYPE OF ORGANIZATION:

_____
Name of Organization

_____
Type of Organization

_____
Address

By: _____
Member

By: _____
Member

IF AN INDIVIDUAL:

_____
Name

_____
Address

_____
Signature

West Haymarket Joint Public Agency Signature Page

Memorandum of Understanding
Light Bulbs, Ballasts and Retrofit Kits
State of Nebraska Contract 16169 OC
MOU241
City of Lincoln, Lancaster County, Nebraska,
City of Lincoln-Lancaster County Public Building Commission (PBC),
West Haymarket Joint Public Agency (WHJPA)
Voss Electric Company, dba Voss Lighting

EXECUTION BY THE WEST HAYMARKET JOINT PUBLIC AGENCY

West Haymarket Joint Public Agency

_____
Leirion Gaylor Baird, Mayor
Chairperson of the West Haymarket Joint Public Agency
Board of Representatives

Approved Order No._____

dated _____

Docusign Envelope ID: 7DB78693-DAE7-42B3-9A3F-8F648886EDB2

STATE OF NEBRASKA CONTRACT AWARD

State Purchasing Bureau
1526 K Street, Suite 130
Lincoln, Nebraska 68508

Telephone: (402) 471-6500
Fax: (402) 471-2089

PAGE	ORDER DATE
1 of 2	06/06/25
BUSINESS UNIT	BUYER
9000	CLINTON PAUL (AS)

VENDOR NUMBER: 500136

VENDOR ADDRESS:

VOSS ELECTRIC COMPANY
DBA VOSS LIGHTING
5200 S 16TH ST
PO BOX 22159
LINCOLN NE 68542-2159

CONTRACT NUMBER
16169 OC

AN AWARD HAS BEEN MADE TO THE CONTRACTOR NAMED ABOVE FOR THE FURNISHING OF MATERIALS AND/OR SERVICES AS LISTED BELOW FOR THE PERIOD:

JUNE 18, 2025 THROUGH JUNE 17, 2028

NO ACTION ON THE PART OF THE CONTRACTOR NEEDS TO BE TAKEN AT THIS TIME. ORDERS FOR THE MATERIALS AND/OR SERVICES WILL BE MADE AS NEEDED BY THE VARIOUS AGENCIES OF THE STATE.

THIS CONTRACT IS NOT AN EXCLUSIVE CONTRACT TO FURNISH THE MATERIALS AND/OR SERVICES SHOWN BELOW, AND DOES NOT PRECLUDE THE PURCHASE OF SIMILAR MATERIALS AND/OR SERVICES FROM OTHER SOURCES.

THE STATE RESERVES THE RIGHT TO EXTEND THE PERIOD OF THIS CONTRACT BEYOND THE TERMINATION DATE WHEN MUTUALLY AGREEABLE TO THE CONTRACTOR AND THE STATE OF NEBRASKA.

Original/Bid Document 121834 OR

Contract to supply and deliver Light Bulbs, Ballasts and Retrofit Kits to the State of Nebraska.

This is the initial term of the contract.

The contract may be renewed for two (2) additional one (1) year periods when mutually agreeable to the vendor and the State of Nebraska.

Vendor Point of Contact:

Name: Mike Little
Phone:402-416-4051
E-Mail: mike.little@vosslighting.com

(CP, 06/06/2025)

Line	Description	Estimated Quantity	Unit of Measure	Unit Price
1	LIGHT BULBS, BALLASTS, AND RETROFIT KITS - FLUORESCENT SEE ATTACHMENT A.0 FOR PRICING	185,000.0000	$	1.0000
2	FLUORESCENT CATALOG 26% DISCOUNT	25,000.0000	$	1.0000
3	LIGHT BULBS, BALLASTS, AND	100,000.0000	$	1.0000

DocuSigned by:
Clinton Paul
13CF80A3E0C0498...
BUYER

DocuSigned by:
D5D6C0E236ED496...
MATERIEL ADMINISTRATOR

Docusign Envelope ID: 7DB78693-DAE7-42B3-9A3F-8F648886EDB2

STATE OF NEBRASKA CONTRACT AWARD

State Purchasing Bureau
1526 K Street, Suite 130
Lincoln, Nebraska 68508

Telephone: (402) 471-6500
Fax: (402) 471-2089

PAGE	ORDER DATE
2 of 2	06/06/25
BUSINESS UNIT	BUYER
9000	CLINTON PAUL (AS)

VENDOR NUMBER: 500136

CONTRACT NUMBER
16169 OC

Line	Description	Estimated Quantity	Unit of Measure	Unit Price
	RETROFIT KITS - LED SEE ATTACHMENT B.0 FOR PRICING			
4	LED CATALOG 28% DISCOUNT	10,000.0000	$	1.0000
5	LIGHT BULBS, BALLASTS, AND RETROFIT KITS -HALIDE SEE ATTACHMENT C.0 FOR PRICING	25,000.0000	$	1.0000
6	HALIDE CATALOG 15% DISCOUNT	5,000.0000	$	1.0000
7	LIGHT BULBS, BALLASTS, AND RETROFIT KITS -MISCELLANEOUS SEE ATTACHMENT D.0 FOR PRICING	50,000.0000	$	1.0000
8	MISCELLANEOUS CATALOG 0% DISCOUNT	25,000.0000	$	1.0000

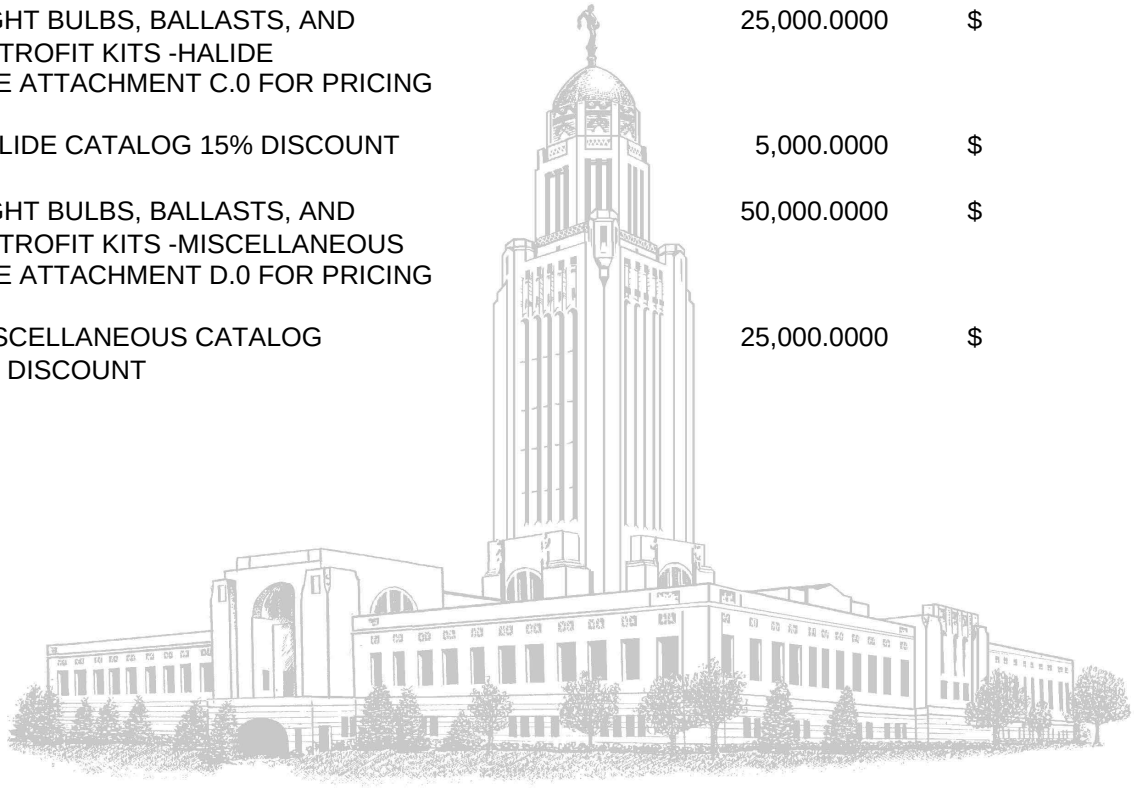

DS CP
BUYER INITIALS

Docusign Envelope ID: 7DB78693-DAE7-42B3-9A3F-8F648886EDB2

State of Nebraska (State Purchasing Bureau)
INVITATION TO BID FOR COMMODITIES CONTRACT

SOLICITATION NUMBER	RELEASE DATE
121834 OR	April 9, 2025
OPENING DATE AND TIME	**PROCUREMENT CONTACT**
May 8, 2025 2:00 P.m. Central Time	Clinton Paul

PLEASE READ CAREFULLY

SCOPE

The State of Nebraska (State), Department of Administrative Services (DAS), Materiel Division, State Purchasing Bureau (SPB), is issuing this solicitation for the purpose of selecting a qualified Bidder to provide Light Bulbs, Ballasts, and Retrofit Kits for a commodity contract. A more detailed description can be found in Section V. The resulting contract may not be an exclusive contract as the State reserves the right to contract for the same or similar goods from other sources now or in the future.

The term of the contract will be (three) (3) years commencing upon execution of the contract by the State and the Vendor (Parties). The Contract includes the option to renew for two (2) additional one (1) Year periods upon mutual agreement of the Parties. The State reserves the right to extend the period of this contract beyond the termination date when mutually agreeable to the Parties.

In the event that a contract with the awarded bidder(s) is cancelled or in the event that the State needs additional Vendors to supply the solicited commodities, this solicitation may be used to procure the solicited goods for up to eighteen (18) months from the date the Intent to Award is posted, provided that 1) the solicited goods will be provided by a bidder (or a successive owner) who submitted a response pursuant to this solicitation, 2) the solicitation response was evaluated, and 3) the bidder will honor the bidder's original response, including the final proposed fixed price for core items and percentage (%) discount off list for non-core items that was submitted during the online reverse auction, allowing for any price increases that would have otherwise been allowed if the bidder would have received the initial award.

This solicitation is being evaluated through a reverse auction bid process as per Neb. Rev. Stat.§ 81-158. The State has partnered with eBridge to host the reverse auction on its web-based bidding platform. The procurement will be completed as a multi-step sealed bid process consisting of the following phases.

Phase 1 - Unpriced Solicitation Responses: Bidders shall submit **unpriced** solicitation responses, which include all requirements listed herein (except price) no later than the due date and time listed in the Schedule of Events. Pricing will only be accepted in Phase 2 during the reverse auction and only from Bidders whose unpriced solicitation responses were found acceptable during Phase 1.

Phase 2 - Price Proposal/Reverse Auction: All pricing will **ONLY** be accepted during the live online reverse auction. Bidders with unpriced solicitation responses that were approved by the State during Phase 1 will receive a Formal Invitation Email from eBridge to participate in the live online reverse auction scheduled for the date and time listed in the Schedule of Events. These Bidders will be required to complete a one-on-one bid system training session with eBridge prior to entering an initial bid.

Bidders must also review the attached eBridge Information and return the Electronic Bid Event Form as instructed. By responding to this bid, you are accepting that if awarded a contract, you will be obligated to pay a two point five percent (2.5%) transaction fee to eBridge pursuant to the Electronic Bid Event Form and Terms and Conditions found in the eBridge Information.

ALL INFORMATION PERTINENT TO THIS SOLICITATION CAN BE FOUND ON THE INTERNET AT: https://das.nebraska.gov/materiel/bidopps.html

IMPORTANT NOTICE: Pursuant to Neb. Rev. Stat. § 84-602.04, State contracts in effect as of January 1, 2014, and contracts entered into thereafter must be posted to a public website. The resulting contract, the solicitation and the successful Vendor's solicitation response will be posted to a public website managed by DAS, which can be found at: https://statecontracts.nebraska.gov and https://www.nebraska.gov/das/materiel/purchasing/contract_search/index.php.

In addition and in furtherance of the State's public records Statute (Neb. Rev. Stat. § 84-712 et seq.), all responses received regarding this Solicitation will be posted to the State Purchasing Bureau public website.

These postings will include the entire solicitation response. Bidder must request that proprietary information be excluded from the posting. The bidder must identify the proprietary information, mark the proprietary information according to state law, and submit the proprietary information in a separate file named conspicuously as "PROPRIETARY INFORMATION". The bidder should submit a detailed written document showing that the release of the proprietary information would give a business advantage to named business competitor(s) and explain how the named business competitor(s) will gain an actual business advantage by disclosure of information. The mere assertion that information is proprietary or that a speculative business advantage might be gained is not sufficient. (See Attorney General Opinion No. 92068, April 27, 1992). THE **BIDDER MAY NOT ASSERT THAT** THE **ENTIRE SOLICITATION IS PROPRIETARY. COST WILL NOT BE CONSIDERED PROPRIETARY AND ARE A PUBLIC RECORD IN** THE **STATE** OF **NEBRASKA.** The State will determine, in

Docusign Envelope ID: 7DB78693-DAE7-42B3-9A3F-8F648886EDB2

its sole discretion, if the disclosure of the information designated by the Bidder as proprietary would 1) give advantage to business competitors and 2) serve no public purpose. The Bidder will be notified of the State's decision. Absent a determination by the State that the information may be withheld pursuant to Neb. Rev. Stat. § 84-712.05, the State will consider all information a public record subject to disclosure.

If the State determines it is required to release withheld proprietary information, the bidder will be informed. It will be the bidder's responsibility to defend the bidder's asserted interest in non-disclosure.

To facilitate such public postings, with the exception of proprietary information, the State of Nebraska reserves a royalty-free, nonexclusive, and irrevocable right to copy, reproduce, publish, post to a website, or otherwise use any contract, or solicitation response for any purpose, and to authorize others to use the documents. Any individual or entity awarded a contract, or who submits a solicitation response, specifically waives any copyright or other protection the contract, or solicitation response may have; and acknowledges that they have the ability and authority to enter into such waiver. This reservation and waiver are a prerequisite for submitting a solicitation response, and award of a contract. Failure to agree to the reservation and waiver will result in the solicitation response being found non-responsive and rejected.

Any entity awarded a contract or submitting a solicitation response agrees not to sue, file a claim, or make a demand of any kind, and will indemnify and hold harmless the State and its employees, volunteers, agents, and its elected and appointed officials from and against any and all claims, liens, demands, damages, liability, actions, causes of action, losses, judgments, costs, and expenses of every nature, including investigation costs and expenses, settlement costs, and attorney fees and expenses, sustained or asserted against the State, arising out of, resulting from, or attributable to the posting of the contract or solicitation response, awards, and other documents.

Docusign Envelope ID: 7DB78693-DAE7-42B3-9A3F-8F648886EDB2

TABLE OF CONTENTS

INVITATION TO BID FOR COMMODITIES CONTRACT i

TABLE OF CONTENTS iii

GLOSSARY OF TERMS v

ACRONYM LIST ix

I. PROCUREMENT PROCEDURE 1

A. GENERAL INFORMATION 1
B. PROCURING OFFICE AND COMMUNICATION WITH STATE STAFF AND EVALUATORS 1
C. SCHEDULE OF EVENTS 1
D. WRITTEN QUESTIONS AND ANSWERS 2
E. SECRETARY OF STATE/TAX COMMISSIONER REGISTRATION REQUIREMENTS (Nonnegotiable) 3
F. ETHICS IN PUBLIC CONTRACTING 3
G. DEVIATIONS FROM THE SOLICITATION 3
H. SUBMISSION OF SOLICITATION RESPONSES 3
I. SOLICITATION PREPARATION COSTS 4
J. FAILURE TO COMPLY WITH SOLICITATION 4
K. SOLICITATION RESPONSE CORRECTIONS 4
L. LATE SOLICITATION RESPONSES 5
M. BID OPENING 5
N. SOLICITATION REQUIREMENTS 5
O. EVALUATION COMMITTEE 5
P. EVALUATION OF SOLICITATION RESPONSES 5
Q. BEST AND FINAL OFFER 6
R. REFERENCE AND CREDIT CHECKS 6
S. AWARD 6
T. LUMP SUM OR "ALL OR NONE" SOLICITATION RESPONSES 7
U. REJECTION OF SOLICITATION RESPONSES 7
V. PRICES & COST CLARIFICATION 7
W. REVERSE AUCTION (Neb. Rev. Stat.§ 81-158) 7
X. SPECIFICATIONS 7
Y. CORE LIST AND CATALOG/NON-CORE 7
Z. ALTERNATE/EQUIVALENT SOLICITATION RESPONSES 8
AA. SOLICITATION TABULATIONS 8
BB. RECYCLING(§ 81-15,159(d)(2)) 8

II. TERMS AND CONDITIONS 9

A. GENERAL. 9
B. NOTIFICATION 10
C. BUYER'S REPRESENTATIVE 10
D. GOVERNING LAW (Nonnegotiable) 10
E. AMENDMENT 10
F. CHANGE ORDERS OR SUBSTITUTIONS 10
G. RECORD OF VENDOR PERFORMANCE 11
H. NOTICE OF POTENTIAL VENDOR BREACH 11
I. BREACH 11
J. NON-WAIVER OF BREACH 11
K. SEVERABILITY 11
L. INDEMNIFICATION 11
M. ATTORNEY'S FEES 12
N. ASSIGNMENT, SALE, OR MERGER 12
O. CONTRACTING WITH OTHER POLITICAL SUBDIVISIONS OF THE STATE OR ANOTHER STATE 12
P. FORCE MAJEURE 13
Q. CONFIDENTIALITY 13
R. EARLY TERMINATION 13
S. CONTRACT CLOSEOUT 13
T. PROHIBITED PRODUCTS 14
U. AMERICANS WITH DISABILITIES ACT 14
V. ACCEPTABLE GOODS 14
W. DELIVERY ARO 14

Docusign Envelope ID: 7DB78693-DAE7-42B3-9A3F-8F648886EDB2

X. ORDERS 14
Y. QUALITY 15
Z. PACKAGING 15

III. VENDOR DUTIES 16

A. INDEPENDENT VENDOR/ OBLIGATIONS 16
B. EMPLOYEE WORK ELIGIBILITY STATUS 17
C. COMPLIANCE WITH CIVIL RIGHTS LAWS AND EQUAL OPPORTUNITY EMPLOYMENT/ NONDISCRIMINATION (Nonnegotiable) 17
D. COOPERATION WITH OTHER VENDORS 17
E. DISCOUNTS 17
F. PRICES 18
G. PERMITS, REGULATIONS, LAWS 18
H. INSURANCE REQUIREMENTS 18
I. ANTITRUST 20
J. CONFLICT OF INTEREST 20
K. ADVERTISING 20
L. DISASTER RECOVERY/BACK UP PLAN 20
M. DRUG POLICY 20
N. WARRANTY 20
0. TIME IS OF THE ESSENCE 21
P. USAGE REPORT 21
Q. ENERGY STAR PRODUCTS 21
R. AUTHORIZED DEALER & WARRANTY 21
S. DELIVERY LOCATIONS/ INSTRUCTIONS 21

IV. PAYMENT 22

A. PROHIBITION AGAINST ADVANCE PAYMENT (Nonnegotiable) 22
B. TAXES (Nonnegotiable) 22
C. INVOICES (Nonnegotiable) 22
D. INSPECTION AND APPROVAL 22
E. PAYMENT (Nonnegotiable) 22
F. LATE PAYMENT (Nonnegotiable) 23
G. SUBJECT TO FUNDING/ FUNDING OUT CLAUSE FOR LOSS OF APPROPRIATIONS (Nonnegotiable) 23
H. RIGHT TO AUDIT (First Paragraph is Nonnegotiable) 23

V. TECHNICAL SPECIFICATIONS 24

A. VENDOR INSTRUCTIONS -ATTACHMENT B - CORE ITEMS SHEET 24
B. NON-COMPLIANCE STATEMENT 24
C. CORE ITEMS LIST 24
See Attachment B - Core Items Sheet 24

Docusign Envelope ID: 7DB78693-DAE7-42B3-9A3F-8F648886EDB2

GLOSSARY OF TERMS

Acceptance Test Procedure: Benchmarks and other performance criteria, developed by the State or other sources of testing standards, for measuring the effectiveness of products or goods and the means used for testing such performance

Addendum: A written correction or alteration to a document during the solicitation process (e.g., Questions and Answers, Revised Schedule of Events, Addendum to Contract Award).

Agency: All officers of the state, departments, bureaus, boards, commissions, councils, and institutions receiving legislative appropriations

Agent/Representative: A person authorized to act on behalf of another

Amend: To alter or change by adding, subtracting, or substituting

Amendment: A written correction or alteration to a document

Appropriation: Legislative authorization to expend public funds for a specific purpose; money set apart for a specific use

Automated Clearing House (ACH): Electronic network for financial transactions in the United States

Award: All purchases, leases, or contracts which are based on competitive solicitations will be awarded according to the provisions in the solicitation

Best and Final Offer (BAFO): In a competitive solicitation, the final offer submitted which contains Vendor's most favorable terms for price

Bid: See Solicitation Response

Bid Opening: The process of opening correctly submitted solicitation responses at the time and place specified in the written solicitation and in the presence of any bidder who wishes to attend

Bidder: A Vendor who submits a Solicitation Response

Breach: Violation of a contractual obligation by failing to perform or repudiation of one's own promise

Business: Any corporation, partnership, individual, sole proprietorship, joint-stock company, joint venture, or any other private legal entity

Business Day: Any weekday, except State-recognized holidays

Calendar Day: Every day shown on the calendar including Saturdays, Sundays, and State/Federal holidays

Cancellation: To call off or revoke a solicitation, purchase order, or contract without expectation of conducting or performing at a later time

Catalog/Non-Core: A printed or electronic list of products a Vendor may provide at a discounted rate or discount off list price to the State. Initial contract award(s) is not based on Catalog/Non-Core items

Central Processing Unit (CPU): Any computer or computer system that is used by the State to store, process, or retrieve data or perform other functions using Operating Systems and applications software

Change Order: Document that provides amendments to an executed purchase order or contract

Collusion: An agreement or cooperation between two or more persons or entities to accomplish a fraudulent, deceitful, or unlawful purpose

Commodities: Any equipment, material, supply, or goods; anything movable or tangible that is provided or sold

Commodities Description: Detailed descriptions of the items to be purchased; may include information necessary to obtain the desired quality, type, color, size, shape, or special characteristics necessary to perform the work intended to produce the desired results

Competition: The effort or action of two or more commercial interests to obtain the same business from third parties

Confidential Information: See Proprietary Information

Contract: An agreement between two or more parties creating obligations that are enforceable or otherwise recognizable at law; the writing that sets forth such an agreement

Contract Administration: The management of the contract which includes and is not limited to contract signing, contract amendments and any necessary legal actions

Contract Award: Document that officially awards a contract to a bidder(s) as the result of a competitive solicitation or a vendor(s) in a contract that qualifies for an exception or exemption from the competitive bidding requirements of the State Procurement Act.

Contract Management: The management of day-to-day activities at the agency which includes and is not limited to ensuring deliverables are received, specifications are met, handling meetings and making payments to the Vendor

Contract Period: The duration of the contract

Contractor: See Vendor

Cooperative Purchasing: The combining of requirements of two or more political entities to obtain advantages of volume purchases, reduction in administrative expenses or other public benefits

Copyright: A property right in an original work of authorship fixed in any tangible medium of expression, giving the holder the exclusive right to reproduce, adapt and distribute the work

Cost Sheet: Commodities or Services specifically listed within the solicitation for evaluation

Critical Program Error: Any Program Error, whether or not known to the State, which prohibits or significantly impairs use of the Licensed Software as set forth in the documentation and intended in the contract

Customer Service: The process of ensuring customer satisfaction by providing assistance and advice on those commodities or services provided by a Vendor

Default: The omission or failure to perform a contractual duty

Deviation: Any proposed change(s) or alteration(s) to either the terms and conditions or deliverables within the scope of the written solicitation or contract

Evaluation: The process of examining a solicitation response after opening to determine the bidder's responsibility, responsiveness to requirements, and to ascertain other characteristics of the solicitation response that relate to determination of the successful award

Evaluation Committee: Individual(s) identified by the agency that leads the solicitation to evaluate solicitation responses

Extension: Continuance of a contract for a specified duration upon the agreement of the parties beyond the original Contract Period; not to be confused with "Renewal Period"

Free on Board (F.O.B.) Destination: The delivery charges are included in the quoted price and prepaid by the Vendor. Vendor is responsible for all claims associated with damages during delivery of product.

Free on Board (F.O.B.) Point of Origin: The delivery charges are not included in the quoted price and are the responsibility of the agency. Agency is responsible for all claims associated with damages during delivery of product

Foreign Corporation: A foreign corporation that was organized and chartered under the laws of another state, government, or country

Goods: See Commodities

Installation Date: The date when the procedures described in "Installation by Vendor" and "Installation by State" as found in the solicitation or contract are completed

Interested Party: A person acting in their personal capacity or an entity entering into a contract or other agreement creating a legal interest therein

Invitation to Bid (1TB): See Solicitation

Late Solicitation Response: A solicitation response received after the Opening Date and Time

Licensed Software Documentation: The user manuals and any other materials in any form or medium customarily provided by the Vendor to the users of the Licensed Software which will provide the State with sufficient information to operate, diagnose, and maintain the Licensed Software properly, safely, and efficiently

Mandatory: Required, compulsory, or obligatory

May: Discretionary, permitted; used to express possibility

Docusign Envelope ID: 7DB78693-DAE7-42B3-9A3F-8F648886EDB2

Module (see System): A collection of routines and data structures that perform a specific function of software

Must: See Shall

National Institute for Governmental Purchasing (NIGP): National Institute of Governmental Purchasing - Source used for assignment of universal commodity codes to goods and services

Non-core: See Catalog

Non-Responsive Solicitation Response: Any bid that does not comply with the requirements of the solicitation or cannot be evaluated against the other bids

Nonnegotiable: These clauses are controlled by state law and are not subject to negotiation

Opening Date and Time: Specified date and time for the opening of received, labeled, and sealed formal solicitation responses

Operating System: The control program in a computer that provides the interface to the computer hardware and peripheral devices, and the usage and allocation of memory resources, processor resources, input/output resources, and security resources

Outsourcing: The contracting out of a business process that an organization may have previously performed internally or for which an organization has a new need to an independent organization from which the process is purchased back

Payroll & **Financial Center (PFC):** Electronic procurement system of record

Performance Bond: An insurance agreement accompanied by a monetary commitment by which a third party (the surety) accepts liability and guarantees that the Vendor fulfills any and all obligations under the contract

Personal Property: See Commodities

Platform: A specific hardware and Operating System combination that is different from other hardware and Operating System combinations to the extent that a different version of the Licensed Software product is required to execute properly in the environment established by such hardware and Operating System combination

Point of Contact (POC): The person designated to receive communications and to communicate

Product: Something that is distributed commercially for use or consumption and that is usually (1) tangible personal property, (2) the result of fabrication or processing, and (3) an item that has passed through a chain of commercial distribution before ultimate use or consumption

Program Error: Code in Licensed Software that produces unintended results or actions or that produces results or actions other than those described in the specifications. A program error includes, without limitation, any Critical Program Error.

Program Set: The group of programs and products, including the Licensed Software specified in the solicitation, plus any additional programs and products licensed by the State under the contract for use by the State

Project: The total scheme, program, or method worked out for the accomplishment of an objective, including all documentation, commodities, and goods to be provided under the contract

Proposal: See Solicitation Response

Proprietary Information: Trade secrets, academic and scientific research work that is in progress and unpublished or other information that if released would give advantage to business competitors and service no public purpose. See Neb. Rev. Stat. § 84-712.05(3). In accordance with Attorney General Opinions 92068 and 97033, proof that information is proprietary requires identification of specific named competitor(s) advantaged by release of the information and the demonstrated advantage the named competitor(s) would gain by the release of information.

Protest/Grievance: A complaint about a governmental action or decision related to the solicitation or resultant contract under SPB's Protest Policy.

Quote: See Solicitation Response

Recommended Hardware Configuration: The data processing hardware (including all terminals, auxiliary storage, communication, and other peripheral devices) to the extent used by the State as recommended by the Vendor

Release Date: The date of public release of the solicitation

Renewal Period: Optional contract periods subsequent to the original Contract Period for a specified duration with previously agreed to terms and conditions; not to be confused with "Extension"

Responsible Bidder: A Vendor who has the capability in all respects to perform fully and lawfully all requirements with integrity and reliability to assure good faith performance

Responsive Bidder: A Vendor who has submitted a solicitation response which conforms to all requirements of the solicitation

Reverse Auction: A price negotiation tool that allows competing suppliers the opportunity to submit lowering bids in an attempt to win the buyers business.

Shall: An order/command; mandatory

Should: Expected; suggested, but not necessarily mandatory

Software License: Legal instrument with or without printed material that governs the use or redistribution of licensed software

Solicitation: A formal invitation to receive quotes in the form of a Request for Proposal or Invitation to Bid

Solicitation Bond: An insurance agreement, accompanied by a monetary commitment, by which a third party (the surety) accepts liability and guarantees that the Vendor will not withdraw the solicitation response

Solicitation Conference: A meeting scheduled for the purpose of clarifying a written solicitation and related expectations

Solicitation Response: An offer, quote, bid, or proposal submitted by a Vendor in response to a Solicitation

Specifications: The detailed statement, especially of the measurements, quality, materials, and functional characteristics, or other items to be provided under a contract

Subcontractor: Individual or entity with whom the Vendor enters a contract to perform a portion of the work awarded to the Vendor

System (see Module): Any collection or aggregation of two (2) or more Modules that is designed to function, or is represented by the Vendor as functioning or being capable of functioning, as an entity

Termination: Occurs when either Party, under a power created by agreement or law, puts an end to the contract prior to the stated expiration date; all obligations that are still executory on both sides are discharged but any right based on prior breach or performance survives

Third-Party: Any person or entity, including but not limited to fiduciaries, shareholders, owners, officers, managers, employees, legally disinterested persons, and subcontractors or agents, and their employees. It shall not include any entity or person who is an interested party to the contract or agreement

Trade Secret: Information, including but not limited to, a drawing, formula, pattern, compilation, program, device, method, technique, code, or process that (a) derives independent economic value, actual or potential, from not being known to, and not being ascertainable by proper means by, other persons who can obtain economic value from its disclosure or use; and (b) is the subject of efforts that are reasonable under the circumstances to maintain its secrecy (see Neb. Rev. Stat.§ 87-502(4))

Trademark: A word, phrase, logo, or other graphic symbol used by a manufacturer or Vendor to distinguish its product from those of others, registered with the U.S. Patent and Trademark Office

Upgrade: Any change that improves or alters the basic function of a product of service

Vendor: An individual or entity lawfully conducting business with the State. or licensed to do so, who seeks to provide and contract for goods or services under the terms of a Solicitation and/or Contract.

Will: See Shall

Work Day: See Business Day

Docusign Envelope ID: 7DB78693-DAE7-42B3-9A3F-8F648886EDB2

ACRONYM LIST

ARO - After Receipt of Order

ACH - Automated Clearing House

BAFO - Best and Final Offer

COi - Certificate of Insurance

CPU - Central Processing Unit

DAS - Department of Administrative Services

F.O.B. - Free on Board

ICT - Information and Communication Technology

1TB - Invitation to Bid

NIGP - National Institute for Governmental Purchasing

P A - Participating Addendum

RFP - Request for Proposal

SPB - State Purchasing Bureau

Docusign Envelope ID: 7DB78693-DAE7-42B3-9A3F-8F648886EDB2

I. PROCUREMENT PROCEDURE

A. GENERAL INFORMATION

This solicitation is designed to solicit responses from qualified bidders who will be responsible for providing **Light Bulbs, Ballasts, and Retrofit Kits** at a competitive and reasonable cost.

Solicitation responses shall conform to all instructions, conditions, and requirements included in the solicitation. Prospective bidders are expected to carefully examine all documents, schedules, and requirements in this solicitation, and respond to each requirement in the format prescribed. Solicitation responses may be found non-responsive if they do not conform to the solicitation.

B. PROCURING OFFICE AND COMMUNICATION WITH STATE STAFF AND EVALUATORS

Procurement responsibilities related to this solicitation reside with the State Purchasing Bureau. The point of contact (POC) for the procurement is as follows:

ITB Number:	121834 OR
Name:	Clinton Paul Procurement Contract Officer
Agency:	State Purchasing Bureau
Address:	1526 K Street, Suite 130
	Lincoln, NE 68508
Telephone:	402-471-6500
E-Mail:	as.materielpurchasing@nebraska.gov

From the date the solicitation is issued until the Intent to Award is issued, communication from the bidder is limited to the POC listed above and eBridge. After the Intent to Award is issued, the Vendor may communicate with individuals the State has designated as responsible for negotiating the contract on behalf of the State. No member of the State Government, employee of the State, or member of the Evaluation Committee is empowered to make binding statements regarding this solicitation. The POC will issue any answers, clarifications, or amendments regarding this solicitation in writing. Only the SPB or awarding agency can award a contract. bidders shall not have any communication with, or attempt to communicate or influence any evaluator involved in this solicitation.

The following exceptions to these restrictions are permitted:

1. Contact made pursuant to pre-existing contracts or obligations;
2. Contact required by the schedule of events or an event scheduled later by POC; and
3. Contact required for negotiation and execution of the final contract.

The State reserves the right to reject a *Vendor's solicitation response, withdraw an Intent to Award, or terminate* a *contract if the State determines there has been* a *violation of these procurement procedures.*

C. SCHEDULE OF EVENTS

The State expects to adhere to the procurement schedule shown below, but all dates are approximate and subject to change.

NOTE: All ShareFile links in the Schedule of Events below, are unique links for each schedule step. Please click the correct link for the upload step you are requesting.

Docusign Envelope ID: 7DB78693-DAE7-42B3-9A3F-8F648886EDB2

ACTIVITY		DATE/TIME
1.	Release solicitation	April 9, 2025
2.	Last day to submit written questions ShareFile link for uploading questions: https://nebraska.sharefile.com/r-rbe535c42a2ae4d85a0d2951a49e99d4a	April 20, 2025
3.	State responds to written questions through a solicitation "Addendum" to be posted to the Internet at: https://das.nebraska.gov/materiel/bidopps.html	April 24, 2025
4.	Phase 1 Bid Opening - Online via Webex Meeting IT IS THE BIDDER'S RESPONSIBILITY TO UPLOAD ELECTRONIC FILES BY THE OPENING DATE AND TIME. EXCEPTIONS WILL NOT BE MADE FOR TECHNOLOGY ISSUES. ShareFile Electronic Solicitation Response submissions Link: https://nebraska.sharefile.com/r-rc6cc787b443b4c4aaf9ccae1d29fe6ca Join Webex Meeting https://sonvideo.webex.com/sonvideo/j.oho?MTID=m901205e6fb8ca6d396fc21	May 8, 2025 2:00 **PM** Central Time
5.	Review for conformance with solicitation requirements	May 9-13, 2025
6.	Formal Invitation to Participate in Phase 2 - Reverse Auction	May 14, 2025
7.	eBridge Reverse Auction Bid System Training	May 15-16, 2025
8.	Initial Bid Due	May 19, 2025 by 2:00 PM Central Time
9.	Reverse Auction	May 21, 2024 at 10:00AM Central Time
10.	Evaluation period	May 21-22, 2025
11.	Post "Intent to Award" to Internet at: htto://das.nebraska.aov/materiel/ourchasina.html	May 23, 2025
12.	Contract finalization period	TBD
13.	Contract award	TBD
14.	Vendor start date	TBD

D. WRITTEN QUESTIONS AND ANSWERS

Questions regarding the meaning or interpretation of any solicitation provision must be submitted in writing to SPB and clearly marked "Solicitation Number 121834 OR; **Light Bulbs, Ballasts, and Retrofit Kits** Questions". POC is not obligated to respond to questions that are received late per the Schedule of Events.

Bidders should submit questions for any items upon which assumptions may be made when preparing a response to the solicitation. Any solicitation response containing assumptions may be deemed non-responsive and may be rejected by the State. Solicitation responses will be evaluated without consideration of any known or unknown assumptions of a bidder. The contract will not incorporate any known or unknown assumptions of a bidder.

Questions should be uploaded using the ShareFile link provided in the Schedule of Events, Section I.C. It is recommended that Vendors submit questions using the following format.

Solicitation Section Reference	Solicitation Page Number	Question

Written answers will be posted at https://das.nebraska.gov/materiel/bidopps.html per the Schedule of Events.

Docusign Envelope ID: 7DB78693-DAE7-42B3-9A3F-8F648886EDB2

E. SECRETARY OF STATE/TAX COMMISSIONER REGISTRATION REQUIREMENTS (Nonnegotiable)

All Bidders must be authorized to transact business in the State of Nebraska and comply with all Nebraska Secretary of State Registration requirements. The Bidder who is the recipient of an Intent to Award may be required to certify that it has complied and produce a true and exact copy of its current (within ninety (90) calendar days of the intent to award) Certificate or Letter of Good Standing, or in the case of a sole proprietorship, provide written documentation of sole proprietorship and the United States Citizenship Attestation Form, available on the DAS website at: https://das.nebraska.gov/materiel/docs/pdf/Individual%20or%20Sole%20Proprietor%20United%20States%20Attestation%20Form%20English%20and%20Spanish.pdf. This should be accomplished prior to execution of the contract.

F. ETHICS IN PUBLIC CONTRACTING

The State reserves the right to reject solicitation responses, withdraw an intent to award or award, or terminate a contract if an ethical violation has been committed, which includes, but is not limited to:

1. Offering or giving, directly or indirectly, a bribe, fee, commission, compensation, gift, gratuity, or anything of value to any person or entity in an attempt to influence the bidding process;
2. Utilizing the services of lobbyists, attorneys, political activists, or consultants to influence or subvert the bidding process;
3. Being considered for, presently being, or becoming debarred, suspended, ineligible, or excluded from contracting with any state or federal entity:
4. Submitting a solicitation response on behalf of another Party or entity; and
5. Colluding with any person or entity to influence the bidding process, submit sham proposals, preclude bidding, fix pricing or costs, create an unfair advantage, subvert the solicitation response, or prejudice the State.

The bidder shall include this clause in any subcontract entered into for the exclusive purpose of performing this contract.

Bidder shall have an affirmative duty to report any violations of this clause by the bidder throughout the bidding process and throughout the term of this contract for the awarded bidder and their subcontractors.

G. DEVIATIONS FROM THE SOLICITATION

The requirements contained in the solicitation (Sections II through V) become a part of the terms and conditions of the contract resulting from this solicitation. Any deviations from the solicitation in Sections II through V must be clearly defined by the bidder in its solicitation response and, if accepted by the State, will become part of the contract. Any specifically defined deviations must not be in conflict with the basic nature of the solicitation, solicitation requirements, or applicable state or federal laws or statutes. "Deviation", for the purposes of this solicitation, means any proposed changes or alterations to either the contractual language or deliverables within the scope of this solicitation. The State discourages deviations and reserves the right to reject proposed deviations.

H. SUBMISSION OF SOLICITATION RESPONSES

The State is only accepting electronic responses submitted in accordance with this solicitation. The State will not accept responses by mail, email, voice, or telephone, unless otherwise explicitly stated in writing by the State.

Pages may be consecutively numbered for the entire solicitation response or may be numbered consecutively within sections. Figures and tables should be numbered and referenced in the text by that number. They should be placed as close as possible to the referencing text.

It is the bidder's responsibility to ensure the solicitation response is received electronically by the date and time indicated in the Schedule of Events. Solicitation Responses must be submitted via ShareFile by the date and time of the opening per the Schedule of Events. No late solicitation responses will be accepted.

It is the responsibility of the bidder to check the website for all information relevant to this solicitation to include addenda and/or amendments issued prior to the opening date. The website can be found here: https://das.nebraska.gov/materiel/bidopps.html.

Emphasis should be concentrated on conformance to the solicitation instructions, responsiveness to requirements, completeness, and clarity of content. If the solicitation response is presented in such a fashion that makes evaluation difficult or overly time consuming the State reserves the right to reject the solicitation response as non-conforming.

The ShareFile link for uploading Solicitation Response(s) is provided in the Schedule of Events, Section I.C.

*****UNLESS OTHERWISE NOTED, DO NOT SUBMIT DOCUMENTS THAT CAN ONLY BE ACCESSED WITH A PASSWORD*****

Docusign Envelope ID: 7DB78693-DAE7-42B3-9A3F-8F648886EDB2

1. **Bidders must submit responses via ShareFile using the solicitation submission link.**
Note: Not all browsers are compatible with ShareFile. Currently Chrome, Internet Explorer and Firefox are compatible. After the bidder clicks the solicitation submission link, the bidder will be prompted to enter contact information including an e-mail address. By entering an e-mail address, the bidder should receive a confirmation email confirming the successful upload directly from ShareFile.

ShareFile link for uploading solicitation response(s) provided in the Schedule of Events, Section I.C.

a. The Solicitation response and Proprietary information should be uploaded as separate and distinct files.
- **i.** If duplicated responses are submitted, the State will retain only the most recently submitted response.
- **ii.** If it is the bidder's intent to submit multiple responses, the bidder must clearly identify the separate submissions.
- **iii.** It is the bidder's responsibility to allow time for electronic uploading. All file uploads must be completed by the Opening date and time per the Schedule of Events. No late responses will be accepted.

b. ELECTRONIC SOLICITATION RESPONSE FILE NAMES
The bidder should clearly identify the uploaded solicitation response files. To assist in identification the bidder should use the following naming convention:
- **i.** 121834 OR, Company Name
  If multiple files are submitted for one solicitation response, add number of files to file names:
  121834 OR Company Name File 1 of 2.
  121834 OR Company Name File 2 of 2.
- **ii.** If multiple responses are submitted for the same solicitation, add the response number to the file names:
  121834 OR Company Name Response 1 File 1 of 2.

The "Contractual Agreement Form" must be signed manually in ink or by DocuSign and returned by the opening date and time along with the bidder's solicitation response and any other requirements as stated in this solicitation in order for the bidder's solicitation response to be evaluated.

By signing this Contractual Agreement Form, the bidder guarantees compliance with the provisions stated in this solicitation and agrees to the terms and conditions unless otherwise indicated in writing.

I. SOLICITATION PREPARATION COSTS

The State shall not incur any liability for any costs incurred by bidders in replying to this solicitation, including any activity related to bidding on this solicitation.

J. FAILURE TO COMPLY WITH SOLICITATION

Violation of the terms and conditions contained in this solicitation or any resultant contract, at any time before or after the award, shall be grounds for action by the State which may include, but is not limited to, the following:

1. Rejection of a bidder's solicitation response,
2. Withdrawal of the Intent to Award,
3. Withdrawal of the Award,
4. Negative documentation regarding Vendor Performance,
5. Termination of the resulting contract,
6. Legal action; and
7. Suspension or Debarment of the bidder from further bidding with the State for the period of time relative to the seriousness of the violation. Such period to be within the sole discretion of the State.

K. SOLICITATION RESPONSE CORRECTIONS

A bidder may correct a mistake in an electronically submitted solicitation response prior to the time of opening by uploading a revised and completed solicitation response.

1. If a corrected electronic solicitation response is submitted, the file name(s) date/time stamped with latest date/time stamp will be accepted. The corrected solicitation response file name(s) should be identified as:

   a. Corrected 121834 OR Company Name Response #1 File 1 of 2,
   b. Corrected 121834 OR Company Name Response #2 File 2 of 2, etc.

Docusign Envelope ID: 7DB78693-DAE7-42B3-9A3F-8F648886EDB2

Changing a solicitation response after opening may be permitted if the change is made to correct a minor error that does not affect price, quantity, quality, delivery, or contractual conditions. In case of a mathematical error in extension of price, unit price shall govern.

L. LATE SOLICITATION RESPONSES

Solicitation Responses received after the time and date of the opening will be considered late responses. Late responses will be considered non-responsive. The State is not responsible for responses that are late or lost regardless of cause or fault.

M. BID OPENING

The opening will consist of opening solicitation responses and announcing the names of bidders. Responses WILL NOT be available for viewing by those present at the opening. Responses will be posted to the State Purchasing Bureau website once an Intent to Award has been posted to the website. Once responses are opened, they become the property of the State of Nebraska and will not be returned.

N. SOLICITATION REQUIREMENTS

The responses will first be examined to determine if all requirements listed below have been addressed and whether further evaluation is warranted. Responses not meeting the requirements may be rejected as non-responsive. The requirements are as follows:

a. Original Contractual Agreement Form signed manually in ink or by DocuSign;
b. Clarity and responsiveness;
c. Completed Sections II through V;
d. Completed Core Items Sheet

0. EVALUATION COMMITTEE

Solicitation Responses are evaluated by members of an Evaluation Committee(s). The Evaluation Committee(s) will consist of individuals selected at the discretion of the State. Names of the members of the Evaluation Committee(s) will not be published prior to the intent to award.

Any contact, attempted contact, or attempt to influence an evaluator that is involved with this Solicitation may result in the rejection of this response and further administrative actions.

P. EVALUATION OF SOLICITATION RESPONSES

All solicitation responses that are deemed responsive to the solicitation will be evaluated based on the following:

Neb. Rev. Stat. § 73-808 allows the State to consider a variety of factors, including, but not limited to, the quality of performance of previous contracts to be considered when evaluating responses to competitive solicitations in determining a responsible bidder. Information obtained from any Contract Compliance Request or any Contract Non-Compliance Notice (See Terms & Conditions, Section I.G) may be used in evaluating responses to solicitations for goods and services to determine the best value for the State.

Neb. Rev. Stat.§ 73-107 allows for a preference for a resident disabled veteran or business located in a designated enterprise zone. When a state contract is to be awarded to the lowest responsible Vendor, a resident disabled veteran or a business located in a designated enterprise zone under the Enterprise Zone Act shall be allowed a preference over any other resident or nonresident Vendor, if all other factors are equal.

Resident disabled veterans means any person (a) who resides in the State of Nebraska, who served in the United States Armed Forces, including any reserve component or the National Guard, who was discharged or otherwise separated with a characterization of honorable or general (under honorable conditions), and who possesses a disability rating letter issued by the United States Department of Veterans Affairs establishing a service-connected disability or a disability determination from the United States Department of Defense and (b)(i) who owns and controls a business or, in the case of a publicly owned business, more than fifty percent of the stock is owned by one or more persons described in subdivision (a) of this subsection and (ii) the management and daily business operations of the business are controlled by one or more persons described in subdivision(a) of this subsection. Any contract entered into without compliance with this section shall be null and void.

Therefore, if a resident disabled veteran or business located in a designated enterprise zone submits a solicitation response in accordance with Neb. Rev. Stat. § 73-107 and has so indicated on the "Contractual Agreement Form" under "Vendor must complete the following" requesting priority/preference to be considered in the award of this contract, the following will need to be submitted by the Vendor within ten (10) business days of request:

Docusign Envelope ID: 7DB78693-DAE7-42B3-9A3F-8F648886EDB2

1. Documentation from the United States Armed Forces confirming service,
2. Documentation of discharge or otherwise separated characterization of honorable or general (under honorable conditions),
3. Disability rating letter issued by the United States Department of Veterans Affairs establishing a service-connected disability or a disability determination from the United States Department of Defense; and
4. Documentation which shows ownership and control of a business or, in the case of a publicly owned business, more than fifty percent of the stock is owned by one or more persons described in subdivision (a) of this subsection; and the management and daily business operations of the business are controlled by one or more persons described in subdivision (a) of this subsection.

Failure to submit the requested documentation within ten (10) business days of notice will disqualify the Vendor from consideration of the preference.

Q. BEST AND FINAL OFFER

Each bidder should provide its best offer before the reverse auction ends and should not expect the State to request a best and final offer (BAFO).

In the event the State receives a single responsive and responsible Solicitation Response, the State may cancel the reverse auction and request a BAFO from the single responsive and responsible bidder. The State reserves the right to conduct more than one. If requested by the State, the BAFO must be submitted on the BAFO Cost Sheet and in accordance with the State's instructions. Failure to submit a requested BAFO or failure to submit a BAFO in accordance with the State's instructions may result in rejection of the bidder's entire solicitation response. BAFOs may be scored and ranked by the Evaluation Committee.

R. REFERENCE AND CREDIT CHECKS

The State reserves the right to conduct and consider reference and credit checks. The State reserves the right to use third parties to conduct reference and credit checks. By submitting a response to this solicitation, the bidder grants to the State the right to contact or arrange a visit in person with any or all of the bidder's clients. Reference and credit checks may be grounds to reject a solicitation response, withdraw an intent to award, or rescind the award of a contract.

S. AWARD

The State reserves the right to evaluate solicitation responses and award contracts in a manner using criteria selected at the State's discretion and in the State's best interest. After evaluation of the bids, or at any point in the solicitation process, the State of Nebraska may take one or more of the following actions:

1. Amend the solicitation;
2. Extend the date and time of an opening;
3. Waive deviations or errors in the State's solicitation process and in bidder responses that are not material, do not compromise the solicitation process or a bidder's response, and do not improve a Vendor's competitive position;
4. Accept or reject a portion of or all of a solicitation response;
5. Accept or reject all responses;
6. Withdraw the solicitation;
7. Elect to re-release the solicitation;
8. Award single lines or multiple lines to one or more Vendors; or,
9. Award one or more all-inclusive contracts.

The State of Nebraska may consider, but is not limited to considering, one or more of the following award criteria:

1. Price;
2. Location;
3. Quality;
4. Delivery time;
5. Vendor qualifications and capabilities;
6. State contract management requirements and/or costs; and

The solicitation does not commit the State to award a contract. Once intent to award decision has been determined, it will be posted to the internet at: https://das.nebraska.gov/materiel/bidopps.html

Any protests must be filed by a bidder within ten (10) business days after the intent to award decision is posted to the internet. Grievance and protest procedure is available on the internet at: https://das.nebraska.gov/materiel/docs/NE_DAS_Materiel_Purchasing_Agency-SPB_Policy_23_07_Protest_Policy.pdf

Docusign Envelope ID: 7DB78693-DAE7-42B3-9A3F-8F648886EDB2

T. LUMP SUM OR "ALL OR NONE" SOLICITATION RESPONSES

The State reserves the right to purchase item-by-item, by groups or as a total when the State may benefit by so doing.

U. REJECTION OF SOLICITATION RESPONSES

The State reserves the right to reject any or all responses, wholly or in part, in the best interest of the State.

V. PRICES & COST CLARIFICATION

Discount and Price provisions are discussed in Sections 111F and **111.GError! Reference source not found.** The State reserves the right to review all aspects of cost for reasonableness and realism as those terms are defined in (Neb. Rev. Stat.§ 73-810 (1) (a) and (b) The State may request clarification of any solicitation where the final price submitted during the reverse auction indicates a significant and unsupported deviation from industry standards or in areas where detailed pricing is required. Under Neb. Rev. Stat.§ 73-810 (2), the State may reject a bid if the price submitted during the reverse auction is not reasonable or realistic.

W. REVERSE AUCTION (Neb. Rev. Stat.§ 81-158)

The State may use a reverse auction bid process for bidders to compete in an open and interactive environment, which may include the use of electronic media. The State may require bidders to register before the opening date and time of the reverse auction. Bids are opened and made public immediately following the reverse auction. Bidders are given opportunity to submit revised bids until the bidding process is complete.

X. SPECIFICATIONS

Any manufacturer's names, trade names, brand names, information and/or catalog numbers listed in a specification are for reference and not intended to limit competition but will be used as the standard by which equivalent material offered will be judged. The Materiel Administrator or his or her designee will be the sole judge of equivalency. The Vendor may offer any brands which meets or exceeds the specification. When a specific product is required, the solicitation will so state. Any item within the solicitation response is to be the latest current model under standard production at the time of order. No used or refurbished equipment will be accepted, unless otherwise stated.

Y. CORE LIST AND CATALOG/NON-CORE

The State of Nebraska intends to enter into a Contract(s) for state agencies and/or facilities. The contract(s) will be for a list of common use items identified as a Core List and all other item purchased identified as a Catalog/Non-Core List. Catalog/Non-Core List items shall be represented by a catalog or current manufacturer price list(s) containing items not called out in the Core List, as shown in Attachment B, 121834 OR, CORE ITEMS SHEET.

a. The Core List shall contain the most repetitively purchased items and will represent those products which the State wishes to establish as standard items based upon their value to the State in terms of quality and price. Vendors will enter their initial/starting offered price into the reverse auction bid system for each of the Core List Items listed within each bid category. This price should be a discounted price from the manufacturer's current catalog or manufacturer Vendor's price list. During the reverse auction, Vendors will lower their initial/starting offered price by applying a discount percentage to each bid category which will reduce the starting offered price for all items within the category. This will ensure the Core Items receive a greater discount than the Catalog/Non-Core items

b. The Core List identifies the most commonly purchased items but is not a complete list of items purchased by the State, nor does it guarantee future purchase of these products. The State reserves the right to add or remove items from the Core Item list based on usage.

c. Catalog/Non-Core List items are defined as those additional items available from the Vendor not listed as part of the Core Items List. Prices for Catalog/Non-Core items shall be determined by applying the final quoted discount percentage entered for each bid category during the reverse auction to the manufacturer's current catalog or manufacturer Vendor's price list(s). The discount percentage for the Catalog/Non-Core items shall remain firm for the duration of the contract period. Vendors must clearly state the date of the catalog or price list used and provide a copy of the catalog or price list to the State Purchasing Bureau upon request.

d. All items not included on the Core Items List shall be considered Catalog/Non-Core Items.

e. At the request of the State Purchasing Bureau, the Vendor shall block availability on certain Catalog/Non-Core items as identified by State Purchasing Bureau (i.e., printing, weapons, furniture, vehicles, micrographic equipmenUcopiers, mail equipment, and office supplies).

f. Any quantities stated are estimated annual quantities and shall not be construed to be either a minimum or a maximum.

Docusign Envelope ID: 7DB78693-DAE7-42B3-9A3F-8F648886EDB2

g. A manufacturer's model/number has been provided for each item Vendors shall be able to provide the specified manufacturer name and number for each Core Item or if unable to provide the specified manufacturer name and number for a Core Item, Vendor shall submit an alternate equal manufacturer name and number for approval. The requested alternate equal shall be equal to or greater than the specified manufacturer name and number to be considered.

h. Vendor must complete Attachment B, Core Items Sheet and return with the Solicitation Response. Vendors shall be able to provide the specified manufacturer name and number or an acceptable equal alternate for all items listed within each bid category. Pay special attention to the unit of measure.

i. The pricing structure, consisting of all pricing formulas and pertinent information, for all non-core items must be clearly defined and documented for future auditing purposes.

j. The percentage discount rate for Catalog/Non-Core items or categories will not decrease during the life of the contract.

k. A firm percentage rate must be quoted by item or category, but a percentage range will not be considered by item or category.

l. Bid Categories have been identified as follows:

Fluorescent

LED

Halide

Miscellaneous

All Catalog/Non Core Items will fall under one of the above listed categories.

After award of the contract(s), the Vendor shall supply additional copies of the current catalog or price list used for this solicitation for distribution to any requesting state agency at no charge within ten (10) business days of request.

Additional catalogs and/or price lists may be required and shall be provided without charge.

Any catalog or price list revisions which occur during the duration of the contract shall be provided upon request and without charge.

Vendor will not substitute any Core List item that has been awarded without prior written approval of State Purchasing Bureau.

Z. ALTERNATE/EQUIVALENT SOLICITATION RESPONSES

Vendor may offer solicitation responses which are at variance from the express specifications of the solicitation. The State reserves the right to consider and accept such responses if, in the judgment of SPB, the response will result in goods and/or services equivalent to or better than those which would be supplied in the original solicitation specifications. Vendor must indicate on the Core Items Sheet and submit with their Solicitation Response the manufacturer's name, number and shall submit with their response, sketches, descriptive literature and/or complete specifications. Reference to literature submitted with a previous response will not satisfy this provision. Responses which do not comply with these requirements are subject to rejection. In the absence of any stated deviation or exception, the response will be accepted as in strict compliance with all terms, conditions and specification, and the Vendor shall be held liable therefore.

AA. SOLICITATION TABULATIONS

Solicitation tabulations are available on the website at: https://das.nebraska.gov/materiel/bidopps.html.

BB. RECYCLING(§ 81-15,159(d)(2))

Preference will be given to items that are manufactured or produced from recycled material or that can be readily reused or recycled after their normal use. Preference will also be given to purchases of corn-based biodegradable plastics and road deicers if available and suitable. No preference shall be given if such preference would result in the purchase of products, materials, or supplies that are of inadequate quality or of substantially higher cost.

Docusign Envelope ID: 7DB78693-DAE7-42B3-9A3F-8F648886EDB2

II. TERMS AND CONDITIONS

Bidder should read the Terms and Conditions within this section and must initial either "Accept All Terms and Conditions Within Section as Written" or "Exceptions Taken to Terms and Conditions Within Section as Written" in the table below. If the bidder takes any exceptions, they must provide the following within the "Exceptions" field of the table below (Bidder may provide responses in separate attachment if multiple exceptions are taken):

1. The specific clause, including section reference, to which an exception has been taken;
2. An explanation of why the bidder took exception to the clause; and
3. Provide alternative language to the specific clause within the solicitation response.

By signing the solicitation, bidder agrees to be legally bound by all the accepted terms and conditions, and any proposed alternative terms and conditions submitted with the solicitation response. The State reserves the right to negotiate rejected or proposed alternative language. If the State and bidder fail to agree on the final Terms and Conditions, the State reserves the right to reject the solicitation response. The State reserves the right to reject solicitation responses that attempt to substitute the bidder's commercial contracts and/or documents for this solicitation.

Accept All Terms and Conditions Within Section as Written (Initial)	Exceptions Taken to Terms and Conditions Within Section as Written (Initial)	Exceptions: (Bidder must note the specific clause, including section reference, to which an exception has been taken, an explanation of why the bidder took exception to the clause, and provide alternative language to the specific clause within the solicitation response.)
M.Z.		

The bidders should submit with their solicitation response any license, user agreement, service level agreement, or similar documents that the bidder wants incorporated in the Contract. Upon notice of Intent to Award, the Vendor must submit a copy of these documents in an editable Word format. The State will not consider incorporation of any document not submitted with the solicitation response. These documents shall be subject to negotiation and will be incorporated as addendums if agreed to by the Parties.

If a conflict or ambiguity arises after the Addendum to Contract Award has been negotiated and agreed to, the Addendum to Contract Award shall be interpreted as follows:

1. If only one (1) Party has a particular clause, then that clause shall control;
2. If both Parties have a similar clause, but the clauses do not conflict, the clauses shall be read together;
3. If both Parties have a similar clause, but the clauses conflict, the State's clause shall control.

A. GENERAL

1. The contract resulting from this solicitation shall incorporate the following documents:

    a. Solicitation including any attachments and addenda;
    b. Questions and Answers;
    c. Bidder's properly submitted solicitation response, including any terms and conditions or agreements submitted by the bidder;
    d. Addendum to Contract Award (if applicable);and
    e. Amendments to the Contract. (if applicable)

    These documents constitute the entirety of the contract.

    Unless otherwise specifically stated in a future contract amendment, in case of any conflict between the incorporated documents, the documents shall govern in the following order of preference with number one (1) receiving preference over all other documents and with each lower numbered document having preference over any higher numbered document: 1) Amendment to the executed Contract with the most recent dated amendment having the highest priority, 2) Executed Contract and any attached Addenda 3) Addendums to the solicitation and any Questions and Answers,

Docusign Envelope ID: 7DB78693-DAE7-42B3-9A3F-8F648886EDB2

4) the original solicitation document and any Addenda or attachments, and 5) the Vendor's submitted solicitation response, including any terms and conditions or agreements that are accepted by the State.

Unless otherwise specifically agreed to in writing by the State, the State's standard terms and conditions, as executed by the State, shall always control over any terms and conditions or agreements submitted or included by the Vendor.

Any ambiguity or conflict in the contract discovered after its execution, not otherwise addressed herein, shall be resolved in accordance with the rules of contract interpretation as established in the State of Nebraska.

B. NOTIFICATION

Bidder and State shall identify the contract manager who shall serve as the point of contact for the executed contract.

Communications regarding the executed contract shall be in writing and shall be deemed to have been given if delivered personally; electronically, return receipt requested; or mailed, return receipt requested. All notices, requests, or communications shall be deemed effective upon receipt.

Either party may change its address for notification purposes by giving notice of the change and setting forth the new address and an effective date.

C. BUYER'S REPRESENTATIVE

The State reserves the right to appoint a Buyer's Representative to manage or assist the Buyer in managing the contract on behalf of the State. The Buyer's Representative will be appointed in writing, and the appointment document will specify the extent of the Buyer's Representative authority and responsibilities. If a Buyer's Representative is appointed, the bidder will be provided a copy of the appointment document and is expected to cooperate accordingly with the Buyer's Representative. The Buyer's Representative has no authority to bind the State to a contract, amendment, addendum, or other change or addition to the contract.

D. GOVERNING LAW (Nonnegotiable)

Notwithstanding any other provision of this contract, or any amendment or addendum(s) entered into contemporaneously or at a later time, the parties understand and agree that, (1) the State of Nebraska is a sovereign state and its authority to contract is therefore subject to limitation by the State's Constitution, statutes, common law, and regulation; (2) this contract will be interpreted and enforced under the laws of the State of Nebraska; (3) any action to enforce the provisions of this contract must be brought in the State of Nebraska per state law; (4) the person signing this contract on behalf of the State of Nebraska does not have the authority to waive the State's sovereign immunity, statutes, common law, or regulations; (5) the indemnity, limitation of liability, remedy, and other similar provisions of the final contract, if any, are entered into subject to the State's Constitution, statutes, common law, regulations, and sovereign immunity; and, (6) all terms and conditions of the final contract, including but not limited to the clauses concerning third-party use, licenses, warranties, limitations of liability, governing law and venue, usage verification, indemnity, liability, remedy or other similar provisions of the final contract are entered into specifically subject to the State's Constitution, statutes, common law, regulations, and sovereign immunity.

The Parties must comply with all applicable local, state, and federal laws, ordinances, rules, orders, and regulations.

E. AMENDMENT

This Contract may be amended in writing, within scope, upon the agreement of both parties.

F. CHANGE ORDERS OR SUBSTITUTIONS

The State and the Vendor, upon the written agreement, may make changes to the contract within the general scope of the solicitation. Changes may involve specifications, the quantity of work, or such other items as the State may find necessary or desirable. Corrections of any deliverable, service, or work required pursuant to the contract shall not be deemed a change. The Vendor may not claim forfeiture of the contract by reasons of such changes.

The Vendor shall prepare a written description of the work required due to the change and an itemized cost sheet for the change. Changes in work and the amount of compensation to be paid to the Vendor shall be determined in accordance with applicable unit prices if any, a pro-rated value, or through negotiations. The State shall not incur a price increase for changes that should have been included in the Vendor's solicitation response, were foreseeable, or result from difficulties with or failure of the Vendor's solicitation response or performance.

No change shall be implemented by the Vendor until approved by the State, and the Contract is amended to reflect the change and associated costs, if any. If there is a dispute regarding the cost, but both parties agree that immediate implementation is necessary, the change may be implemented, and cost negotiations may continue with both Parties retaining all remedies under the contract and law.

Docusign Envelope ID: 7DB78693-DAE7-42B3-9A3F-8F648886EDB2

In the event any good or service is discontinued or replaced upon mutual consent during the contract period or prior to delivery, the State reserves the right to amend the contract or purchase order to include the alternate product at the same price.

Vendor will not substitute any item that has been awarded without prior written approval of SPB

G. RECORD OF VENDOR PERFORMANCE

The State may document the vendor's performance, which may include, but is not limited to, the customer service provided by the vendor, the ability of the vendor, the skill of the vendor, and any instance(s) of products or services delivered or performed which fail to meet the terms of the purchase order, contract, and/or Solicitation specifications. In addition to other remedies and options available to the State, the State may issue one or more notices to the vendor outlining any issues the State has regarding the vendor's performance for a specific contract ("Contract Compliance Request"). The State may also document the Vendor's performance in a report, which may or may not be provided to the vendor ("Contract Non-Compliance Notice"). The Vendor shall respond to any Contract Compliance Request or Contract Non-Compliance Notice in accordance with such notice or request. At the sole discretion of the State, such Contract Compliance Requests and Contract Non-Compliance Notices may be placed in the State's records regarding the vendor and may be considered by the State and held against the vendor in any future contract or award opportunity. The record of vendor performance will be considered in any suspension or debarment action.

H. NOTICE OF POTENTIAL VENDOR BREACH

If Vendor breaches the contract or anticipates breaching the contract, the Vendor shall immediately give written notice to the State. The notice shall explain the breach or potential breach, a proposed cure, and may include a request for a waiver of the breach if so desired. The State may, in its discretion, temporarily or permanently waive the breach. By granting a waiver, the State does not forfeit any rights or remedies to which the State is entitled by law or equity, or pursuant to the provisions of the contract. Failure to give immediate notice, however, may be grounds for denial of any request for a waiver of a breach.

I. BREACH

Either Party may terminate the contract, in whole or in part, if the other Party breaches its duty to perform its obligations under the contract in a timely and proper manner. Termination requires written notice of default and a thirty (30) calendar day (or longer at the non-breaching Party's discretion considering the gravity and nature of the default) cure period. Said notice shall be delivered by email, delivery receipt requested; certified mail, return receipt requested; or in person with proof of delivery. Allowing time to cure a failure or breach of contract does not waive the right to immediately terminate the contract for the same or different contract breach which may occur at a different time.

In case of breach by the Vendor, the State may, without unreasonable delay, make a good faith effort to make a reasonable purchase or contract to purchase goods in substitution of those due from the Vendor. The State may recover from the Vendor as damages the difference between the costs of covering the breach. Notwithstanding any clause to the contrary, the State may also recover the contract price together with any incidental or consequential damages defined in UCC Section 2-715, but less expenses saved in consequence of Vendor's breach. OR In case of default of the Vendor, the State may contract the service from other sources and hold the Vendor responsible for any excess cost occasioned thereby.

The State's failure to make payment shall not be a breach, and the Vendor shall retain all available statutory remedies. (See Indemnity - Self-Insurance and Payment)

J. NON-WAIVER OF BREACH

The acceptance of late performance with or without objection or reservation by a Party shall not waive any rights of the Party nor constitute a waiver of the requirement of timely performance of any obligations remaining to be performed.

K. SEVERABILITY

If any term or condition of the contract is declared by a court of competent jurisdiction to be illegal or in conflict with any law, the validity of the remaining terms and conditions shall not be affected, and the rights and obligations of the parties shall be construed and enforced as if the contract did not contain the provision held to be invalid or illegal.

L. INDEMNIFICATION

1. GENERAL

Docusign Envelope ID: 7DB78693-DAE7-42B3-9A3F-8F648886EDB2

The Vendor agrees to defend, indemnify, and hold harmless the State and its employees, volunteers, agents, and its elected and appointed officials ("the indemnified parties") from and against any and all claims, liens, demands, damages, liability, actions, causes of action, losses, judgments, costs, and expenses of every nature, including investigation costs and expenses, settlement costs, and attorney fees and expenses ("the claims"), sustained or asserted against the State for personal injury, death, or property loss or damage, arising out of, resulting from, or attributable to the willful misconduct, negligence, error, or omission of the Vendor, its employees, subcontractors, consultants, representatives, and agents, resulting from this contract, except to the extent such Vendor liability is attenuated by any action of the State which directly and proximately contributed to the claims.

2. INTELLECTUAL PROPERTY

The Vendor agrees it will, at its sole cost and expense, defend, indemnify, and hold harmless the indemnified parties from and against any and all claims, to the extent such claims arise out of, result from, or are attributable to, the actual or alleged infringement or misappropriation of any patent, copyright, trade secret, trademark, or confidential information of any third party by the Vendor or its employees, subcontractors, consultants, representatives, and agents; provided, however, the State gives the Vendor prompt notice in writing of the claim. The Vendor may not settle any infringement claim that will affect the State's use of the Licensed Software without the State's prior written consent, which consent may be withheld for any reason.

If a judgment or settlement is obtained or reasonably anticipated against the State's use of any intellectual property for which the Vendor has indemnified the State, the Vendor shall, at the Vendor's sole cost and expense, promptly modify the item or items which were determined to be infringing, acquire a license or licenses on the State's behalf to provide the necessary rights to the State to eliminate the infringement, or provide the State with a non-infringing substitute that provides the State the same functionality. At the State's election, the actual or anticipated judgment may be treated as a breach of warranty by the Vendor, and the State may receive the remedies provided under this solicitation.

3. PERSONNEL

The Vendor shall, at its expense, indemnify and hold harmless the indemnified parties from and against any claim with respect to withholding taxes, worker's compensation, employee benefits, or any other claim, demand, liability, damage, or loss of any nature relating to any of the personnel, including subcontractors and their employees, provided by the Vendor.

4. SELF-INSURANCE (Statutory)

The State is self-insured for any loss and purchases excess insurance coverage pursuant to Neb. Rev. Stat. § 81-8,239.01. If there is a presumed loss under the provisions of this contract, Vendor may file a claim with the Office of Risk Management pursuant to Neb. Rev. Stat. §§ 81-8,829 through 81-8,306 for review by the State Claims Board. The State retains all rights and immunities under the State Miscellaneous (§ 81-8,294), Tort (§ 81-8,209), and Contract Claim Acts (§ 81-8,302), as outlined in Neb. Rev. Stat. § 81-8,209 et seq. and under any other provisions of law and accepts liability under this contract to the extent provided by law.

5. The Parties acknowledge that Attorney General for the State is required by statute to represent the legal interests of the State, and that any provision of this indemnity clause is subject to the statutory authority of the Attorney General.

M. ATTORNEY'S FEES

In the event of any litigation, appeal, or other legal action to enforce any provision of the contract, the Parties agree to pay all expenses of such action, as permitted by law and if ordered by the court, including attorney's fees and costs, if the other Party prevails.

N. ASSIGNMENT, SALE, OR MERGER

Either Party may assign the contract upon mutual written agreement of the other Party. Such agreement shall not be unreasonably withheld.

The Vendor retains the right to enter into a sale, merger, acquisition, internal reorganization, or similar transaction involving Vendor's business. Vendor agrees to cooperate with the State in executing amendments to the contract to allow for the transaction. If a third party or entity is involved in the transaction, the Vendor will remain responsible for performance of the contract until such time as the person or entity involved in the transaction agrees in writing to be contractually bound by this contract and perform all obligations of the contract.

O. CONTRACTING WITH OTHER POLITICAL SUBDIVISIONS OF THE STATE OR ANOTHER STATE

The Vendor may, but shall not be required to, allow agencies, as defined in Neb. Rev. Stat. § 81-145(2), to use this contract. The terms and conditions, including price, of the contract may not be amended. The State shall not be

Docusign Envelope ID: 7DB78693-DAE7-42B3-9A3F-8F648886EDB2

contractually obligated or liable for any contract entered into pursuant to this clause. A listing of Nebraska political subdivisions may be found at the website of the Nebraska Auditor of Public Accounts.

The Vendor may, but shall not be required to, allow other states, agencies or divisions of other states, or political subdivisions of other states to use this contract. The terms and conditions, including price, of this contract shall apply to any such contract, but may be amended upon mutual consent of the Parties. The State of Nebraska shall not be contractually or otherwise obligated or liable under any contract entered into pursuant to this clause. The State shall be notified if a contract is executed based upon this contract.

P. FORCE MAJEURE

Neither Party shall be liable for any costs or damages, or for default resulting from its inability to perform any of its obligations under the contract due to an unforeseeable natural or man-made event outside the control and not the fault of the affected Party ("Force Majeure Event"). The Party so affected shall immediately make a written request for relief to the other Party and shall have the burden of proof to justify the request. The other Party may grant the relief requested; relief may not be unreasonably withheld. Labor disputes with the impacted Party's own employees will not be considered a Force Majeure Event.

Q. CONFIDENTIALITY

All materials and information provided by the Parties or acquired by a Party on behalf of the other Party shall be regarded as confidential information. All materials and information provided or acquired shall be handled in accordance with federal and state law, and ethical standards. Should said confidentiality be breached by a Party, the Party shall notify the other Party immediately of said breach and take immediate corrective action.

It is incumbent upon the Parties to inform their officers and employees of the penalties for improper disclosure imposed by the Privacy Act of 1974, 5 U.S.C. 552a. Specifically, 5 U.S.C. 552a (i)(1), which is made applicable by 5 U.S.C. 552a (m)(1), provides that any officer or employee, who by virtue of his/her employment or official position has possession of or access to agency records which contain individually identifiable information, the disclosure of which is prohibited by the Privacy Act or regulations established thereunder, and who knowing that disclosure of the specific material is prohibited, willfully discloses the material in any manner to any person or agency not entitled to receive it, shall be guilty of a misdemeanor and fined not more than $5,000.

R. EARLY TERMINATION

The contract may be terminated as follows:

1. The State and the Vendor, by mutual written agreement, may terminate the contract at any time.
2. The State, at its sole discretion, may terminate the contract for any reason upon thirty (30) calendar days' written notice to the Vendor. Such termination shall not relieve the Vendor of warranty or other service obligations incurred under the terms of the contract. In the event of termination, the Vendor shall be entitled to payment, determined on a pro rata basis, for products or services satisfactorily performed or provided.
3. The State may terminate the contract immediately for the following reasons:
    - **a.** if directed to do so by statute;
    - **b.** Vendor has made an assignment for the benefit of creditors, has admitted in writing its inability to pay debts as they mature, or has ceased operating in the normal course of business;
    - **c.** a trustee or receiver of the Vendor or of any substantial part of the Vendor's assets has been appointed by a court;
    - **d.** fraud, misappropriation, embezzlement, malfeasance, misfeasance, or illegal conduct pertaining to performance under the contract by its Vendor, its employees, officers, directors, or shareholders;
    - **e.** an involuntary proceeding has been commenced by any party against the Vendor under any one of the chapters of Title 11 of the United States Code and (i) the proceeding has been pending for at least sixty (60) calendar days; or (ii) the Vendor has consented, either expressly or by operation of law, to the entry of an order for relief; or (iii) the Vendor has been decreed or adjudged a debtor;
    - **f.** a voluntary petition has been filed by the Vendor under any of the chapters of Title 11 of the United States Code;
    - **g.** Vendor intentionally discloses confidential information;
    - **h.** Vendor has or announces it will discontinue support of the deliverable; and,
    - **i.** In the event funding is no longer available.

S. CONTRACT CLOSEOUT

Upon termination of the contract for any reason the Vendor shall within thirty (30) days, unless stated otherwise herein:

1. Transfer all completed or partially completed deliverables to the State,
2. Transfer ownership and title to all completed or partially completed deliverables to the State,

Docusign Envelope ID: 7DB78693-DAE7-42B3-9A3F-8F648886EDB2

3. Return to the State all information and data unless the Vendor is permitted to keep the information or data by contract or rule of law. Vendor may retain one copy of any information or data as required to comply with applicable work product documentation standards or as are automatically retained in the course of Vendor's routine back up procedures,
4. Cooperate with any successor Contactor, person, or entity in the assumption of any or all of the obligations of this contract,
5. Cooperate with any successor Contactor, person, or entity with the transfer of information or data related to this contract,
6. Return or vacate any state owned real or personal property; and,
7. Return all data in a mutually acceptable format and manner.

Nothing in this section should be construed to require the Vendor to surrender intellectual property, real or personal property, or information or data owned by the Vendor for which the State has no legal claim.

T. PROHIBITED PRODUCTS

The State will not accept Gray Market Products for this solicitation. Gray Market is defined as the trade of a commodity through distribution channels which, while legal, are unofficial, unauthorized, or unintended by the original manufacturer. Gray Market items are not designed to be sold in a particular market and cannot be supported by the authorized importer because of various reasons.

The State will not accept any products made by a company owned by the Chinese Communist Party. Furthermore, pursuant to Executive Order No. 23-05, the State will not accept any communications equipment or services developed by organizations on the Federal Communications Commission's Covered List.

The State will not accept goods from countries or persons identified on the Office of Foreign Assets Control Sanctions List.

U. AMERICANS WITH DISABILITIES ACT

Vendor shall comply with all applicable provisions of the Americans with Disabilities Act of 1990 (42 U.S.C. 12131–12134), as amended by the ADA Amendments Act of 2008 (ADA Amendments Act) (Pub.L. 110–325, 122 Stat. 3553 (2008)), which prohibits discrimination on the basis of disability by public entities.

V. ACCEPTABLE GOODS

All products proposed shall be of the latest manufacture in production as of the date of the solicitation and be of proven performance and under standard design complete as regularly advertised and marketed and shall be delivered complete with all necessary parts, specified accessories, tools, and special features.

Used, demonstrator, prototype, or discontinued equipment is not acceptable. Complete specifications, manufacturer's descriptive literature and/or advertising data sheets with cuts or photographs may be required prior to an award and should be included with the solicitation response on the IDENTICAL equipment proposed.

Literature should be complete and the latest published. Any information necessary to show compliance with these specifications not given on the manufacturer's descriptive literature and/or advertising data sheets should be supplied in writing on or attached to the solicitation response.

If manufacturer's information necessary to show compliance with these specifications is not attached to the solicitation response, the Vendor may be required to submit requested information within three (3) business days of a written request. Failure to submit requested descriptive literature or advertising data sheets may be grounds to reject the solicitation response.

W. DELIVERY ARO

A successful Vendor will maintain sufficient inventory to process and deliver within five (5) calendar days ARO. There will be no minimum order requirements. Deliveries must be clearly marked with the purchase order number. If delays in delivery are anticipated, the Vendor will immediately notify the agency of the expected delivery date. The order may be canceled if the delivery time is unsatisfactory, and the State may procure item(s) from other sources and the Vendor will be held responsible for any/all excess cost.

At the time of delivery, a designated State employee will sign the "invoice/packing slip." This signature will only indicate that the order has been received and that the items actually delivered agree with the delivery invoice. This signature does not indicate all items were received in good condition and/or that there is not possible hidden damage.

X. ORDERS

Orders will be placed either by, phone, e-mail, or Internet (if available and not to the exclusion of the other methods). All orders must reference a purchase order number and the purchase order number must be referenced on the packing slip, and invoice. Invoices are to be sent to the "Invoice to" address on the purchase order.

Docusign Envelope ID: 7DB78693-DAE7-42B3-9A3F-8F648886EDB2

Y. QUALITY

Product quality must meet specifications and be consistent for the term of the contract. All materials must be of first quality, under standard production by the manufacturer and be of standard design, complete as regularly advertised and marketed and be of proven performance.

A guarantee of satisfactory performance by the Vendor and meeting delivery dates are considered to be an integral part of the purchase contract resulting from this solicitation.

Products are to be fully guaranteed and may be returned for full credit or replacement (at the State's option) for any reason during the initial warranty period with no additional charges for shipping or restocking.

Z. PACKAGING

Packages are to be clearly marked with size, weight, color, quantity, and the purchase order number.

Packaging must be of suitable size and of sufficient strength to protect the contents during shipping, handling and storage.

Docusign Envelope ID: 7DB78693-DAE7-42B3-9A3F-8F648886EDB2

III. VENDOR DUTIES

Bidder should read the Vendor Duties within this section and must initial either "Accept All Terms and Conditions Within Section as Written" or "Exceptions Taken to Vendor Duties Within Section as Written" in the table below. If the bidder takes any exceptions, they must provide the following within the "Exceptions" field of the table below (Bidder may provide responses in separate attachment if multiple exceptions are taken):

1. The specific clause, including section reference, to which an exception has been taken;
2. An explanation of why the bidder took exception to the clause; and
3. Provide alternative language to the specific clause within the solicitation response.

By signing the solicitation, bidder agrees to be legally bound by all the accepted terms and conditions, and any proposed alternative terms and conditions submitted with the solicitation response. The State reserves the right to negotiate rejected or proposed alternative language. If the State and bidder fail to agree on the final Terms and Conditions, the State reserves the right to reject the solicitation response. The State reserves the right to reject solicitation responses that attempt to substitute the bidder's commercial contracts and/or documents for this solicitation.

Accept All Vendor Duties Within Section as Written (Initial)	Exceptions Taken to Vendor Duties Within Section as Written (Initial)	Exceptions: (Bidder must note the specific clause, including section reference, to which an exception has been taken, an explanation of why the bidder took exception to the clause, and provide alternative language to the specific clause within the solicitation response.)
M.A.		

A. INDEPENDENT VENDOR / OBLIGATIONS

It is agreed that the Vendor is an independent Vendor and that nothing contained herein is intended or should be construed as creating or establishing a relationship of employment, agency, or a partnership.

The Vendor is solely responsible for fulfilling the contract. The Vendor or the Vendor's representative shall be the sole point of contact regarding all contractual matters.

The Vendor shall secure, at its own expense, all personnel required to perform the services under the contract. The personnel the Vendor uses to fulfill the contract shall have no contractual or other legal relationship with the State; they shall not be considered employees of the State and shall not be entitled to any compensation, rights or benefits from the State, including but not limited to, tenure rights, medical and hospital care, sick and vacation leave, severance pay, or retirement benefits.

By-name personnel commitments made in the Vendor's solicitation response shall not be changed without the prior written approval of the State. Replacement of these personnel, if approved by the State, shall be with personnel of equal or greater ability and qualifications.

The Vendor warrants that all persons assigned to the project shall be employees of the Vendor or a subcontractor and shall be fully qualified to perform the work required herein. Personnel employed by the Vendor or a subcontractor to fulfill the terms of the contract shall remain under the sole direction and control of the Vendor or the subcontractor respectively.

With respect to its employees, the Vendor agrees to be solely responsible for the following:

1. Any and all pay, benefits, and employment taxes and/or other payroll withholding,
2. Any and all vehicles used by the Vendor's employees, including all insurance required by state law,
3. Damages incurred by Vendor's employees within the scope of their duties under the contract,
4. Maintaining Workers' Compensation and health insurance that complies with state and federal law and submitting any reports on such insurance to the extent required by governing law,
5. Determining the hours to be worked and the duties to be performed by the Vendor's employees; and,

Docusign Envelope ID: 7DB78693-DAE7-42B3-9A3F-8F648886EDB2

6. All claims on behalf of any person arising out of employment or alleged employment (including without limit claims of discrimination alleged against the Vendor, its officers, agents, or subcontractors or subcontractor's employees).

If the Vendor intends to utilize any subcontractor, the subcontractor's level of effort, tasks, and time allocation should be clearly defined in the solicitation response. The Vendor shall agree that it will not utilize any subcontractors not specifically included in its solicitation response in the performance of the contract without the prior written authorization of the State. If the Vendor subcontracts any of the work, the Vendor agrees to pay any and all subcontractors in accordance with the Vendor's agreement with the respective subcontractor(s).

The State reserves the right to require the Vendor to reassign or remove from the project any Vendor or subcontractor employee.

Vendor shall insure that the terms and conditions contained in any contract with a subcontractor does not conflict with the terms and conditions of this contract.

The Vendor shall include a similar provision, for the protection of the State, in the contract with any subcontractor engaged to perform work on this contract.

B. EMPLOYEE WORK ELIGIBILITY STATUS

The Vendor is required and hereby agrees to use a federal immigration verification system to determine the work eligibility status of employees physically performing services within the State of Nebraska. A federal immigration verification system means the electronic verification of the work authorization program authorized by the Illegal Immigration Reform and Immigrant Responsibility Act of 1996, 8 U.S.C. 1324a, known as the E-Verify Program, or an equivalent federal program designated by the United States Department of Homeland Security or other federal agency authorized to verify the work eligibility status of an employee.

If the Vendor is an individual or sole proprietorship, the following applies:

1. The Vendor must complete the United States Citizenship Attestation Form, available on the Department of Administrative Services website at https://das.nebraska.gov/materiel/docs/pdf/Individual%20or%20Sole%20Proprietor%20United%20States%20Attestation%20Form%20English%20and%20Spanish.pdf
2. The completed United States Attestation Form should be submitted with the Solicitation response.
3. If the Vendor indicates on such attestation form that he or she is a qualified alien, the Vendor agrees to provide the US Citizenship and Immigration Services documentation required to verify the Vendor's lawful presence in the United States using the Systematic Alien Verification for Entitlements (SAVE) Program.
4. The Vendor understands and agrees that lawful presence in the United States is required, and the Vendor may be disqualified or the contract terminated if such lawful presence cannot be verified as required by Neb. Rev. Stat. § 4-108.

C. COMPLIANCE WITH CIVIL RIGHTS LAWS AND EQUAL OPPORTUNITY EMPLOYMENT / NONDISCRIMINATION (Nonnegotiable)

The Vendor shall comply with all applicable local, state, and federal statutes and regulations regarding civil rights laws and equal opportunity employment. The Nebraska Fair Employment Practice Act prohibits Vendors of the State of Nebraska, and their Subcontractors, from discriminating against any employee or applicant for employment, with respect to hire, tenure, terms, conditions, compensation, or privileges of employment because of race, color, religion, sex, disability, marital status, or national origin (Neb. Rev. Stat. §§ 48-1101 to 48-1125). The Vendor guarantees compliance with the Nebraska Fair Employment Practice Act, and breach of this provision shall be regarded as a material breach of contract. The Vendor shall insert a similar provision in all Subcontracts for goods and services to be covered by any contract resulting from this Solicitation.

D. COOPERATION WITH OTHER VENDORS

Vendor may be required to work with or in close proximity to other Vendors or individuals that may be working on the same or different projects. The Vendor shall agree to cooperate with such other Vendors or individuals and shall not commit or permit any act which may interfere with the performance of work by any other Vendor or individual. Vendor is not required to compromise Vendor's intellectual property or proprietary information unless expressly required to do so by this contract.

E. DISCOUNTS

Prices quoted during the reverse auction shall be inclusive of ALL trade discounts. Cash discount terms of less than thirty (30) days will not be considered as part of the solicitation response. Cash discount periods will be computed

Docusign Envelope ID: 7DB78693-DAE7-42B3-9A3F-8F648886EDB2

from the date of receipt of a properly executed claim voucher or the date of completion of delivery of all items in a satisfactory condition, whichever is later.

F. PRICES

Prices submitted during the reverse auction shall remain fixed for the first one hundred-eighty (180) days of the contract. Any request for a price increase subsequent to the first one hundred-eighty days (180) of the contract must be submitted in writing to the State Purchasing Bureau a minimum of 30 days before the requested effective date. Documentation may be required by the State to support the price increase.

The State reserves the right to deny any requested price increase. No price increases are to be billed to any State Agencies prior to written amendment of the contract by the parties.

The State will be given full proportionate benefit of any decreases for the term of the contract.

G. PERMITS, REGULATIONS, LAWS

The contract price shall include the cost of all royalties, licenses, permits, and approvals, whether arising from patents, trademarks, copyrights or otherwise, that are in any way involved in the contract. The Vendor shall obtain and pay for all royalties, licenses, and permits, and approvals necessary for the execution of the contract. The Vendor must guarantee that it has the full legal right to the materials, supplies, equipment, software, and other items used to execute this contract.

H. INSURANCE REQUIREMENTS

The Vendor shall throughout the term of the contract maintain insurance as specified herein and provide the State a current Certificate of Insurance/Acord Form (COI) verifying the coverage. The Vendor shall not commence work on the contract until the insurance is in place. If Vendor subcontracts any portion of the Contract the Vendor must, throughout the term of the contract, either:

1. Provide equivalent insurance for each subcontractor and provide a COI verifying the coverage for the subcontractor,
2. Require each subcontractor to have equivalent insurance and provide written notice to the State that the Vendor has verified that each subcontractor has the required coverage; or
3. Provide the State with copies of each subcontractor's Certificate of Insurance evidencing the required coverage.

The Vendor shall not allow any Subcontractor to commence work until the Subcontractor has equivalent insurance. The failure of the State to require a COI, or the failure of the Vendor to provide a COI or require subcontractor insurance shall not limit, relieve, or decrease the liability of the Vendor hereunder.

In the event that any policy written on a claims-made basis terminates or is canceled during the term of the contract or within one (1) year of termination or expiration of the contract, the Vendor shall obtain an extended discovery or reporting period, or a new insurance policy, providing coverage required by this contract for the term of the contract and one (1) year following termination or expiration of the contract.

If by the terms of any insurance a mandatory deductible is required, or if the Vendor elects to increase the mandatory deductible amount, the Vendor shall be responsible for payment of the amount of the deductible in the event of a paid claim.

Notwithstanding any other clause in this Contract, the State may recover up to the liability limits of the insurance policies required herein.

1. WORKERS' COMPENSATION INSURANCE

The Vendor shall take out and maintain during the life of this contract the statutory Workers' Compensation and Employer's Liability Insurance for all of the contactors' employees to be engaged in work on the project under this contract and, in case any such work is sublet, the Vendor shall require the Subcontractor similarly to provide Worker's Compensation and Employer's Liability Insurance for all of the Subcontractor's employees to be engaged in such work. This policy shall be written to meet the statutory requirements for the state in which the work is to be performed, including Occupational Disease. **The policy shall include a waiver of subrogation in favor of the State. The COI shall contain the mandatory COI subrogation waiver language found hereinafter.** The amounts of such insurance shall not be less than the limits stated hereinafter. For employees working in the State of Nebraska, the policy must be written by an entity authorized by the State of Nebraska Department of Insurance to write Workers' Compensation and Employer's Liability Insurance for Nebraska employees.

Docusign Envelope ID: 7DB78693-DAE7-42B3-9A3F-8F648886EDB2

2. COMMERCIAL GENERAL LIABILITY INSURANCE AND COMMERCIAL AUTOMOBILE LIABILITY INSURANCE

The Vendor shall take out and maintain during the life of this contract such Commercial General Liability Insurance and Commercial Automobile Liability Insurance as shall protect Vendor and any Subcontractor performing work covered by this contract from claims for damages for bodily injury, including death, as well as from claims for property damage, which may arise from operations under this contract, whether such operation be by the Vendor or by any Subcontractor or by anyone directly or indirectly employed by either of them, and the amounts of such insurance shall not be less than limits stated hereinafter.

The Commercial General Liability Insurance shall be written on an **occurrence basis**, and provide Premises/Operations, Products/Completed Operations, Independent Vendors, Personal Injury, and Contractual Liability coverage**. The policy shall include the State, and others as required by the contract documents, as Additional Insured(s). This policy shall be primary, and any insurance or self-insurance carried by the State shall be considered secondary and non-contributory. The COI shall contain the mandatory COI liability waiver language found hereinafter.** The Commercial Automobile Liability Insurance shall be written to cover all Owned, Non-owned, and Hired vehicles.

REQUIRED INSURANCE COVERAGE	
COMMERCIAL GENERAL LIABILITY	
General Aggregate	$2,000,000
Products/Completed Operations Aggregate	$2,000,000
Personal/Advertising Injury	$1,000,000 per occurrence
Bodily Injury/Property Damage	$1,000,000 per occurrence
Medical Payments	$10,000 any one person
Damage to Rented Premises (Fire)	$300,000 each occurrence
Contractual	Included
XCU Liability (Explosion, Collapse, and Underground Damage)	Included
Independent Vendors	Included
If higher limits are required, the Umbrella/Excess Liability limits are allowed to satisfy the higher limit.	
WORKER'S COMPENSATION	
Employers Liability Limits	$500K/$500K/$500K
Statutory Limits- All States	Statutory - State of Nebraska
Voluntary Compensation	Statutory
COMMERCIAL AUTOMOBILE LIABILITY	
Bodily Injury/Property Damage	$1,000,000 combined single limit
Include All Owned, Hired & Non-Owned Automobile liability	Included
Motor Carrier Act Endorsement	Where Applicable
UMBRELLA/EXCESS LIABILITY	
Over Primary Insurance	$5,000,000 per occurrence
COMMERCIAL CRIME	
Crime/Employee Dishonesty Including 3rd Party Fidelity	$1,000,000
MANDATORY COI SUBROGATION WAIVER LANGUAGE	
"Workers' Compensation policy shall include a waiver of subrogation in favor of the State of Nebraska."	
MANDATORY COI LIABILITY WAIVER LANGUAGE	
"Commercial General Liability & Commercial Automobile Liability policies shall name the State of Nebraska as an Additional Insured and the policies shall be primary and any insurance or self-insurance carried by the State shall be considered secondary and non-contributory as additionally insured."	

3. EVIDENCE OF COVERAGE

The Vendor shall furnish the Contract Manager, via email, with a certificate of insurance coverage complying with the above requirements prior to beginning work at:

121834 OR

Nebraska State Purchasing Bureau
Attn: Clinton Paul
Address: 1526 K Street Suite 130

Docusign Envelope ID: 7DB78693-DAE7-42B3-9A3F-8F648886EDB2

City, State, Zip: Lincoln, NE 68508
PCO email address: clinton.paul@nebraska.gov

These certificates or the cover sheet shall reference the solicitation number, and the certificates shall include the name of the company, policy numbers, effective dates, dates of expiration, and amounts and types of coverage afforded. If the State is damaged by the failure of the Vendor to maintain such insurance, then the Vendor shall be responsible for all reasonable costs properly attributable thereto.

Reasonable notice of cancellation of any required insurance policy must be submitted to the contract manager as listed above when issued and a new coverage binder shall be submitted immediately to ensure no break in coverage.

4. DEVIATIONS

The insurance requirements are subject to limited negotiation. Negotiation typically includes, but is not necessarily limited to, the correct type of coverage, necessity for Workers' Compensation, and the type of automobile coverage carried by the Vendor.

I. ANTITRUST

The Vendor hereby assigns to the State any and all claims for overcharges as to goods and/or services provided in connection with this contract resulting from antitrust violations which arise under antitrust laws of the United States and the antitrust laws of the State.

J. CONFLICT OF INTEREST

By submitting a solicitation response, vendor certifies that no relationship exists between the vendor and any person or entity which either is, or gives the appearance of, a conflict of interest related to this solicitation or project.

Vendor further certifies that vendor will not employ any individual known by vendor to have a conflict of interest nor shall vendor take any action or acquire any interest, either directly or indirectly, which will conflict in any manner or degree with the performance of its contractual obligations hereunder or which creates an actual or appearance of conflict of interest.

If there is an actual or perceived conflict of interest, vendor shall provide with its solicitation response a full disclosure of the facts describing such actual or perceived conflict of interest and a proposed mitigation plan for consideration. The State will then consider such disclosure and proposed mitigation plan and either approve or reject as part of the overall solicitation response evaluation.

K. ADVERTISING

The Vendor agrees not to refer to the contract award in advertising in such a manner as to state or imply that the company or its goods or services are endorsed or preferred by the State. Any publicity releases pertaining to the project shall not be issued without prior written approval from the State.

L. DISASTER RECOVERY/BACK UP PLAN

The Vendor shall have a disaster recovery and back-up plan, of which a copy should be provided upon request to the State, which includes, but is not limited to equipment, personnel, facilities, and transportation, in order to continue delivery of goods and services as specified under the specifications in the contract in the event of a disaster.

M. DRUG POLICY

Vendor certifies it maintains a drug free workplace environment to ensure worker safety and workplace integrity. Vendor agrees to provide a copy of its drug free workplace policy at any time upon request by the State.

N. WARRANTY

Despite any clause to the contrary, the Vendor represents and warrants that its services hereunder shall be performed by competent personnel and shall be of professional quality consistent with generally accepted industry standards for the performance of such services and shall comply in all respects with the requirements of this Agreement. For any breach of this warranty, the Vendor shall, for a period of ninety (90) days from performance of the service, perform the services again, at no cost to the State, or if Vendor is unable to perform the services as warranted, Vendor shall reimburse the State all fees paid to Vendor for the unsatisfactory services. The rights and remedies of the parties under this warranty are in addition to any other rights and remedies of the parties provided by law or equity, including, without limitation actual damages, and, as applicable and awarded under the law, to a prevailing party, reasonable attorneys' fees, and costs.

Docusign Envelope ID: 7DB78693-DAE7-42B3-9A3F-8F648886EDB2

The Vendor warrants for a period of one (1) year from the date of Acceptance that: (a) the Products perform according to all specific claims that the Vendor made in its response to the solicitation, (b) the Product is suitable for the ordinary purposes for which such Product is used, (c) the Product is suitable for any special purposes identified in the solicitation or for which the State has relied on the Vendor's skill or judgment, (d) the Product is designed and manufactured in a commercially reasonable manner, and (e) the Product is free of defects. Upon breach of the warranty, the Vendor will repair or replace (at no charge to the State) the Product whose nonconformance is discovered and made known to the Vendor. If the repaired and/or replaced Product proves to be inadequate, or fails of its essential purpose, the Vendor will refund the full amount of any payments that have been made. The rights and remedies of the parties under this warranty are in addition to any other rights and remedies of the parties provided by law or equity, including, without limitation actual damages, and, as applicable and awarded under the law, to a prevailing party, reasonable attorneys' fees, and costs.

O. TIME IS OF THE ESSENCE

Time is of the essence with respect to Vendor's performance and deliverables pursuant to this Contract.

P. USAGE REPORT

The Vendor shall, upon request by the State Purchasing Bureau, provide a usage report of this contract by state agencies and political subdivisions.

The reporting period may be determined based on need and may include the following:

a. Agency name, item(s), and dollar amount and shall include the information of the time period requested.

b. Fill rate information for Core List and Catalog/Non-Core items, statewide and by agency to include the number of orders received, orders processed, back orders, and partially filled orders.

Usage reports by agency and statewide indicating the numbers of each Core List and Catalog/Non-Core item sold.

Any additional report the State Purchasing Bureau may deem necessary.

Q. ENERGY STAR PRODUCTS

The Vendor must provide products that earn the Energy Star and meet the Energy Star specifications for energy efficiency. The Vendor is encouraged to visit https://www.energystar.gov/ for complete product specifications and updated lists of qualifying products.

R. AUTHORIZED DEALER & WARRANTY

To the extent required by the manufacturer, the Vendor shall be an authorized dealer. Vendor may be required to substantiate that he/she is an authorized dealer. Proof, if required, must be submitted to SPB within three (3) business days of the request and prior to the award of any contract.

The terms of the original manufacturer's standard warranty shall apply to all equipment acquired from this solicitation for the entire warranty period.

S. DELIVERY LOCATIONS / INSTRUCTIONS

Vendor must provide products to all applicable delivery locations/instructions.

See Attachment A for delivery locations and instructions.

Docusign Envelope ID: 7DB78693-DAE7-42B3-9A3F-8F648886EDB2

IV. PAYMENT

Bidder should read the Payment clauses within this section and must initial either "Accept All Terms and Conditions Within Section as Written" or "Exceptions Taken to Payment clauses Within Section as Written" in the table below. If the bidder takes any exceptions, they must provide the following within the "Exceptions" field of the table below (Bidder may provide responses in separate attachment if multiple exceptions are taken):

1. The specific clause, including section reference, to which an exception has been taken;
2. An explanation of why the bidder took exception to the clause; and
3. Provide alternative language to the specific clause within the solicitation response.

By signing the solicitation, bidder agrees to be legally bound by all the accepted terms and conditions, and any proposed alternative terms and conditions submitted with the solicitation response. The State reserves the right to negotiate rejected or proposed alternative language. If the State and bidder fail to agree on the final Terms and Conditions, the State reserves the right to reject the solicitation response. The State reserves the right to reject solicitation responses that attempt to substitute the bidder's commercial contracts and/or documents for this solicitation.

Accept All Payment Clauses Within Section as Written (Initial)	Exceptions Taken to Payment Clauses Within Section as Written (Initial)	Exceptions: (Bidder must note the specific clause, including section reference, to which an exception has been taken, an explanation of why the bidder took exception to the clause, and provide alternative language to the specific clause within the solicitation response.)
M.R.		

A. PROHIBITION AGAINST ADVANCE PAYMENT (Nonnegotiable)

Neb. Rev. Stat. § 81-2403 states, "[n]o goods or services shall be deemed to be received by an agency until all such goods or services are completely delivered and finally accepted by the agency."

B. TAXES (Nonnegotiable)

The State is not required to pay taxes and assumes no such liability as a result of this Solicitation. The Vendor may request a copy of the Nebraska Department of Revenue, Nebraska Resale or Exempt Sale Certificate for Sales Tax Exemption, Form 13 for their records. Any property tax payable on the Vendor's equipment which may be installed in a state-owned facility is the responsibility of the Vendor.

C. INVOICES (Nonnegotiable)

Invoices for payments must be submitted by the Vendor to the agency requesting the services with sufficient detail to support payment. Awarded Vendor will be provided with information on where to direct invoices upon contract finalization. The terms and conditions included in the Vendor's invoice shall be deemed to be solely for the convenience of the parties. No terms or conditions of any such invoice shall be binding upon the State, and no action by the State, including without limitation the payment of any such invoice in whole or in part, shall be construed as binding or estopping the State with respect to any such term or condition, unless the invoice term or condition has been previously agreed to by the State as an amendment to the contract. **The State shall have forty-five (45) calendar days to pay after a valid and accurate invoice is received by the State.**

D. INSPECTION AND APPROVAL

Final inspection and approval of all work required under the contract shall be performed by the designated State officials.

E. PAYMENT (Nonnegotiable)

Payment will be made by the responsible agency in compliance with the State of Nebraska Prompt Payment Act (See Neb. Rev. Stat. § 81-2403). The State may require the Vendor to accept payment by electronic means such as ACH deposit. In no event shall the State be responsible or liable to pay for any goods and services provided by the Vendor

Docusign Envelope ID: 7DB78693-DAE7-42B3-9A3F-8F648886EDB2

prior to the Effective Date of the contract, and the Vendor hereby waives any claim or cause of action for any such goods or services.

F. LATE PAYMENT (Nonnegotiable)

The Vendor may charge the responsible agency interest for late payment in compliance with the State of Nebraska Prompt Payment Act (See Neb. Rev. Stat. §§ 81-2401 through 81-2408).

G. SUBJECT TO FUNDING / FUNDING OUT CLAUSE FOR LOSS OF APPROPRIATIONS (Nonnegotiable)

The State's obligation to pay amounts due on the Contract for fiscal years following the current fiscal year is contingent upon legislative appropriation of funds. Should said funds not be appropriated, the State may terminate the contract with respect to those payments for the fiscal year(s) for which such funds are not appropriated. The State will give the Vendor written notice thirty (30) calendar days prior to the effective date of termination. All obligations of the State to make payments after the termination date will cease. The Vendor shall be entitled to receive just and equitable compensation for any authorized work which has been satisfactorily completed as of the termination date. In no event shall the Vendor be paid for a loss of anticipated profit.

H. RIGHT TO AUDIT (First Paragraph is Nonnegotiable)

The State shall have the right to audit the Vendor's performance of this contract upon a thirty (30) days' written notice. Vendor shall utilize generally accepted accounting principles, and shall maintain the accounting records, and other records and information relevant to the contract (Information) to enable the State to audit the contract. (Neb. Rev. Stat. § 84-304 et seq.) The State may audit, and the Vendor shall maintain, the Information during the term of the contract and for a period of five (5) years after the completion of this contract or until all issues or litigation are resolved, whichever is later. The Vendor shall make the Information available to the State at Vendor's place of business or a location acceptable to both Parties during normal business hours. If this is not practical or the Vendor so elects, the Vendor may provide electronic or paper copies of the Information. The State reserves the right to examine, make copies of, and take notes on any Information relevant to this contract, regardless of the form or the Information, how it is stored, or who possesses the Information. Under no circumstance will the Vendor be required to create or maintain documents not kept in the ordinary course of Vendor's business operations, nor will Vendor be required to disclose any information, including but not limited to product cost data, which is confidential or proprietary to Vendor.

The Parties shall pay their own costs of the audit unless the audit finds a previously undisclosed overpayment by the State. If a previously undisclosed overpayment exceeds one-half of one percent (.5%) of the total contract billings, or if fraud, material misrepresentations, or non-performance is discovered on the part of the Vendor, the Vendor shall reimburse the State for the total costs of the audit. Overpayments and audit costs owed to the State shall be paid within ninety (90) days of written notice of the claim. The Vendor agrees to correct any material weaknesses or condition found as a result of the audit.

Docusign Envelope ID: 7DB78693-DAE7-42B3-9A3F-8F648886EDB2

V. TECHNICAL SPECIFICATIONS

A. VENDOR INSTRUCTIONS – ATTACHMENT B – CORE ITEMS SHEET

Vendor must respond to each of the Core Items listed on the Core Items Sheet. Specifications listed are minimum conditions that must be met in order for a Vendor to qualify for the award.

"YES" response means the Vendor guarantees they can provide the specified manufacturer name and number listed.

"NO" response means the Vendor cannot provide the specified manufacturer name and number listed.

If Vendor marks ""NO", the Vendor should provide an Alternate Equal Manufacturer Name & Number in the column provided and an explanation of how this would be determined to be an acceptable equal alternate to meeting the specified manufacturer name and number. Equal alternates must be detailed in such a way that allows such deviations to be fully evaluated. The State shall determine at its sole discretion whether or not the Vendor's equal alternate is an acceptable alternate.

B. NON-COMPLIANCE STATEMENT

Read the specifications carefully for each Core Item Listed in the Core Items Sheet. Any and all exceptions to these specifications must be written on or attached to your solicitation response. Any noncompliance may void your solicitation response. Non-compliance to any single specification can void your solicitation response.

It is the responsibility of Vendors to obtain information and clarifications. The State is not responsible for any erroneous or incomplete understandings or wrongful interpretations of this solicitation by any Vendor.

C. CORE ITEMS LIST

See Attachment B – Core Items Sheet

Docusign Envelope ID: 7DB78693-DAE7-42B3-9A3F-8F648886EDB2

CONTRACTUAL AGREEMENT FORM

BIDDER MUST COMPLETE THE FOLLOWING

By signing this Contractual Agreement Form, the bidder guarantees compliance with the provisions stated in this solicitation and agrees to the terms and conditions unless otherwise indicated in writing and certifies that bidder is not owned by the Chinese Communist Party.

Per Nebraska's Transparency in Government Procurement Act, Neb. Rev Stat § 73-603, DAS is required to collect statistical information regarding the number of contracts awarded to Nebraska Vendors. This information is for statistical purposes only and will not be considered for contract award purposes.

_____ NEBRASKA VENDOR AFFIDAVIT: Bidder hereby attests that bidder is a Nebraska Vendor. "Nebraska Vendor" shall mean any bidder who has maintained a bona fide place of business and at least one employee within this state for at least the six (6) months immediately preceding the posting date of this Solicitation. All vendors who are not a Nebraska Vendor are considered Foreign Vendors under Neb. Rev Stat § 73-603 (c).

_____ I hereby certify that I am a Resident disabled veteran or business located in a designated enterprise zone in accordance with Neb. Rev. Stat. § 73-107 and wish to have preference, if applicable, considered in the award of this contract.

_____ I hereby certify that I am a blind person licensed by the Commission for the Blind & Visually Impaired in accordance with Neb. Rev. Stat. § 71-8611 and wish to have preference considered in the award of this contract.

THIS FORM MUST BE SIGNED MANUALLY IN INK OR BY DOCUSIGN

COMPANY:	VOSS LIGHTING
ADDRESS:	5200 S. 16TH ST.
PHONE:	402-416-4051
EMAIL:	MIKE.LITTLE@VOSSLIGHTING.COM
BIDDER NAME & TITLE:	MIKE LITTLE / SALES REP.
SIGNATURE:	Michael D. Little
DATE:	MAY 8, 2025

VENDOR COMMUNICATION WITH THE STATE CONTACT INFORMATION (IF DIFFERENT FROM ABOVE)	
NAME:	
TITLE:	
PHONE:	
EMAIL:	

Docusign Envelope ID: 7DB78693-DAE7-42B3-9A3F-8F648886EDB2

16169 OC

Attachment A.0

FLUORESCENT PRICING					
Manufacturing #	**Description**	**Package Qty**	**Manufacturer**	**UOM**	**Unit Price**
280784	25 watt - 48" - T8 - Medium Bi-Pin (G13) Base - 4,100K - Cool White - 800 Series - Energy Advantage - ALTO	1	Philips	EA	$ 3.40
479626	32 watt - 48" - T8 - Medium Bi-Pin (G13) Base - 4,100K - Cool White - ALTO II	1	Philips	EA	$ 2.29
281790	32 watt - 48" - T8 - Medium Bi-Pin (G13) Base - 4,100K - Cool White - 800 Series - ALTO - PlusHV	1	Philips	EA	$ 2.83
ICN4P32N35I	Instant Start Electronic Fluorescent Ballast For F32T8 F17T8 Lamps Run At 120-277V (913701220301)	1	Advance	EA	$ 14.33
433978	25 watt - 48" - T8 - Medium Bi-Pin (G13) Base - 4,100K - Cool White - ALTO - Energy Adv - Extra Long Life	1	Philips	EA	$ 3.40
281816	32 watt - 48" - T8 - Medium Bi-Pin (G13) Base - 5,000K - Daylight - 800 Series- ALTO - PlusHV	1	Philips	EA	$ 3.29
281915	25 watt - 36" - T8 - Medium Bi-Pin (G13) Base - 4,100K - Cool White - 800 Series - ALTO	1	Philips	EA	$ 4.68
423889	40 watt - 48" - T12 - Medium Bi-Pin (G13) Base - 4,100K - Cool White - Supreme - ALTO	1	Philips	EA	$ 2.98
135103	54 watt - 48" - T5 - Mini Bi-Pin (G5) Base - 5,000K - Daylight - 800 Series - High Output - Silhouette - ALTO	1	Philips	EA	$ 4.71
ICN3P32N35I	Instant Start Fluorescent 120-277V Electronic Ballast For F32T8 F40T8 F17T8 Bulbs (913701220201)	1	Advance	EA	$ 12.62
379024	32 watt - 22.5" - T8 - Medium Bi-Pin (G13) Base - 4,100K - Cool White - 800 Series - ALTO - U-Bent	1	Philips	EA	$ 13.35
281899	17 watt - 24" - T8 - Medium Bi-Pin (G13) Base - 4,100K - Cool White - 800 Series - ALTO	1	Philips	EA	$ 5.71
479634	32 watt - 48" - T8 - Medium Bi-Pin (G13) Base - 5,000K - Daylight - ALTO II	1	Philips	EA	$ 2.66
535559	15.5 watt - 22.6" - T8 - Medium Bi-Pin (2G13) Base - 4,000K - Cool White - U-Bent - Ballast Bypass	1	Philips	EA	$ 20.59
IOPA2P32N35I	Instant Start Electronic Fluorescent Optanium Ballast For F32T8/ES Lamps 120-277V (913701216301)	1	Advance	EA	$ 16.29
479600	32 watt - 48" - T8 - Medium Bi-Pin (G13) Base - 3,500K - Neutral White - ALTO II	1	Philips	EA	$ 2.66
383364	Compact 26 watt - PL-C - 4-Pin (G24q-3) Base - 3,500K - Natural White - Double Tube - Cluster - ALTO	1	Philips	EA	$ 4.00
281675	32 watt - 48" - T8 - Medium Bi-Pin (G13) Base - 3,500K - Neutral White - 800 Series - ALTO - Plus	1	Philips	EA	$ 3.29
383372	Compact 26 watt - PL-C - 4-Pin (G24q-3) Base - 4,100K - Cool White - Double Tube - Cluster - ALTO	1	Philips	EA	$ 4.00
281055	28 watt - 48" - T8 - Medium Bi-Pin (G13) Base - 5,000K - Daylight - 800 Series- Energy Advantage - ALTO	1	Philips	EA	$ 3.46
423087	40 watt - 22.5" - T12 - Medium Bi-Pin (G13) Base - 4,100K - Cool White - Supreme - ALTO - U-Bent	1	Philips	EA	$ 14.64
281030	28 watt - 48" - T8 - Medium Bi-Pin (G13) Base - 4,100K - Cool White - 800 Series - Energy Advantage - ALT	1	Philips	EA	$ 3.46
ICN1P32N35I	Instant Start Fluorescent 120-277V Electronic Ballast For-1 F17T8 F25T8 F32T8 F32T8/ES Bulb (913710852301)	1	Advance	EA	$ 15.08
300442	Compact 40 watt - 120 volt - PL-L - 4-Pin (2G11) Base - 4,100K - Cool White - 800 Series - Single Tube	1	Philips	EA	$ 9.22
423194	75 watt - 96" - T12 - Single Pin (Fa8) Base - 4,100K - Cool White Supreme - High CRI - Slimline - ALTO	1	Philips	EA	$ 11.48
273599	40 watt - 48" - T12 - Medium Bi-Pin (G13) Base - 6,500K - Daylight Deluxe - ALTO	1	Philips	EA	$ 3.57
ICN2S40N35I	Rapid Start Fluorescent 120/277V Electronic Ballast For F34T12 F40T12 Bulbs (913710855801)	1	Advance	EA	$ 23.30
ICN2P60N35I	Instant Start Fluorescent 120-277V Electronic Ballast For F72T12 F96T12 F96T12/ES Bulbs (913701261901)	1	Advance	EA	$ 34.55
281899	Linear Fluorescent Bulb: 2 ft Nominal Lg, T8, 17 W Watt, 4100K, 1,375 lm Light Output, Glass,F17T8/TL841 120V	1	Philips	EA	$ 5.71
479626	F32T8/TL941/ALTO - T8 Fluorescent Lamp F32T8/TL941 120V	1	Philips	EA	$ 2.66

CATALOG % DISCOUNT FOR FLOURESCENT:	26%

Docusign Envelope ID: 7DB78693-DAE7-42B3-9A3F-8F648886EDB2

16169 OC

Attachment B.0

LED PRICING					
Manufacturing #	**Description**	**Package Qty**	**Manufacturer**	**UOM**	**Unit Price**
532333	5 watt - 120/277 volt - PL-C - 2-Pin (GX23-2) Base - 3,500K - Neutral White - InstantFit	1	Philips	EA	$ 7.80
532903	16.5 watt 70-110 volt PL-L 4-Pin (2G11) Base - 3,500K - Natural White - InstantFit	1	Philips	EA	$ 14.14
911401874482	HCY1421L8CST-UN3-DIM HCY Sealed High Bay LED, 14,000/21,000LM, 80CRI, Color Sel., 0-10V UNV, 120-347	1	Daybright	EA	$ 121.29
911401837781	FluxPanel Selectable LED Lighting, 2' x 2'	1	Daybright	EA	$ 41.28
911401837881	Day-Brite CFI 35-45-50W FluxPanel Selectable LED Lighting, 2' x 4'	1	Daybright	EA	$ 50.40
579458	10.5 watt - 120/277 volt - 48" - T8 - Medium Bi-Pin (G13) Base - 4,000K - Cool White - Ballast Bypass - MasterClass - Dimmable	1	Philips	EA	$ 11.69
565598	8.9 watt - 120/270 volt - 48" - T8 - Medium Bi-Pin (G13) Base - 3,500K - Neutral White - Frosted - Dimmable	1	Philips	EA	$ 8.45
579326	9.9 watt - 120/277 volt - 48" - T8 - Medium Bi-Pin (G13) Base - 4,000K - Cool White - Ballast Bypass - CorePro - Dimmable	1	Philips	EA	$ 5.26
579532	16.5 watt - 120/277 volt - 48" - T8 - Medium Bi-Pin (G13) Base - 5,000K - Daylight - Ballast Bypass - MasterClass - Dimmable	1	Philips	EA	$ 12.19
541821	7 watt - 24" - T8 - Medium Bi-Pin (G13) Base - 3,500K - Neutral White - InstantFit - Ballast Compatible - Non-Dimmable	1	Philips	EA	$ 9.50
575753	42 watt - 120/277 volt - 96" - T8 - Recessed Double Contact (R17d) Base - Base - 5,000K - Daylight - Frosted - CorePro - Non-Dimmable	1	Philips	EA	$ 21.75
565614	8.9 watt - 120/277 volt - 48" T8 - Medium Bi-Pin (G13) Base - 5,000K - Daylight - Ballast Compatible - Double Ended - InstantFit - Dimmable	1	Philips	EA	$ 7.28
565606	8.9 watt - 48" - T8 - Medium Bi-Pin (G13) Base - 4,000K - Natural White - Dimmable	1	Philips	EA	$ 7.28
579425	14.5 watt - 120/277 volt - 48" - T8 - Medium Bi-Pin (G13) Base - 4,000K - Cool White - Ballast Bypass - CorePro - Non-Dimmable	1	Philips	EA	$ 5.77
575738	33 watt - 120/277 volt - 96" - T8 - Single Pin (Fa8) Base - Base - 5,000K - Daylight - Frosted - CorePro - Non-Dimmable	1	Philips	EA	$ 21.75
579433	14.5 watt - 120/277 volt - 48" - T8 - Medium Bi-Pin (G13) Base - 5,000K - Daylight - Ballast Bypass - CorePro - Non-Dimmable	1	Philips	EA	$ 5.54
5651135	LED Light Bulb 8.5 watt LED lamp 60 watt comparable	1	Philips	EA	$ 1.11
561019	Lamp, 16 W, 100 W Incandescent Equivalent, EX26 Single Contact Medium Screw 16 watt LED bulb 100 watt comparable Dimmable	1	Philips	EA	$ 4.92

CATALOG % DISCOUNT FOR LED:	28%

Docusign Envelope ID: 7DB78693-DAE7-42B3-9A3F-8F648886EDB2

16169 OC
Attachment C.0

HALIDE PRICING					
Manufacturing #	**Description**	**Package Qty**	**Manufacturer**	**UOM**	**Unit Price**
71A5593001D	Metal Halide Ballast 175W M137/M152 Quad Kit (913700503051)	1	Advance	EA	$ 189.19
71A5993001D	Metal Halide Ballast 175W M137/M152 Quad Kit (913700503051)	1	Advance	EA	$ 247.84
71A5390001D	Metal Halide Ballast 100W M90/140 Quad Kit (913700533009)	1	Advance	EA	$ 131.69
71A6051001D	Metal Halide Core And Coil Ballast For-1 400W M59 Lamp Run At 120V/208V/240V/277V/480V (913710414201)	1	Advance	EA	$ 138.50
429936	Metal Halide HID 100 watt - ED17P - Medium Screw (E26) Base - 4,000K - Cool White - Clear - MasterColor - Protected - Elite	1	Philips	EA	$ 49.89
71A6092001D	Metal Halide HID Ballast Kit 1 Lamp - 400 watt - 120/208/240/277 volt	1	Advance	EA	$ 174.35
236935	Metal Halide HID 330 watt - ED37 - Exclusionary Mogul Screw (EX39) Base - 4,000K - Cool White - Coated - Energy Advantage - AllStart Ceramic	1	Philips	EA	$ 91.04
429950	Metal Halide HID 70 watt - ED17P - Medium Screw (E26) Base - 4,000K - Cool White - Clear - MasterColor - Protected - Elite	1	Philips	EA	$ 64.15
415224	Metal Halide HID 1,000 watt - BT56 - Mogul Screw (E39) Base - 3,700K - Natural White - Clear	1	Philips	EA	$ 49.10
429886	Metal Halide HID 100 watt - ED17 - Medium Screw (E26) Base - 4,200K - Cool White - Clear - MasterColor - Elite	1	Philips	EA	$ 58.30
232801	Metal Halide HID 250 watt - ED28 - Mogul Screw (E39) Base - Clear - 3,800K - Natural White - Pulse Start	1	Philips	EA	$ 53.74
423681	Metal Halide HID 50 watt - ED17 - Medium Screw (E26) Base - 3,000K - Natural White - Clear - MasterColor	1	Philips	EA	$ 64.15
419473	Metal Halide HID 70 watt - BD17 - Medium Screw (E26) Base - 3,000K - Natural White - Clear - MasterColor Elite	1	Philips	EA	$ 61.10
377242	Metal Halide HID 150 watt - ED17P - Medium Screw (E26) Base - 4,000K - Cool White - Clear - Protected - ALTO - Fadeblock - Master Color - Ceramic	1	Philips	EA	$ 55.19
232538	Metal Halide HID 400 watt - ED28 - Mogul Screw (E39) Base - 4,000K - Cool White - Clear - Pulse Start	1	Philips	EA	$ 63.46
140400	Metal Halide HID 20 watt - T3.5 - PGJ5 Base - 3,000K - Natural White - 800 Series - Mini - MasterColor - Ceramic	1	Philips	EA	$ 47.08
432302	Metal Halide HID 400 watt - 135 volt - ED37 - Mogul Screw (E39) Base - Frosted - 3,900K - Natural White - Switch Start	1	Philips	EA	$ 27.63
354621	Metal Halide HID 150 watt - BD17 - Medium Screw (E26) Base - 3,700K - Natural White - Clear - Switch Start	1	Philips	EA	$ 38.65
313585	Metal Halide HID 175 watt - BD17 - Medium Screw (E26) Base - 4,000K - Cool White - Clear - Switch Start	1	Philips	EA	$ 18.10
274498	Metal Halide HID 400 watt - ED37 - Mogul Screw (E39) Base - 4,000K - Cool White - Clear - Switch Start	1	Philips	EA	$ 23.79
232520	Metal Halide HID 400 watt - ED28 - Mogul Screw (E39) Base - 4,000K - Cool White - Clear - Pulse Start	1	Philips	EA	$ 52.94
426023	Metal Halide HID 400 watt - ED28 - Mogul Screw (E39) Base - Clear - 4,000K - Cool White - Switch Start	1	Philips	EA	$ 25.36
274845	Metal Halide HID 250 watt - ED28 - Mogul Screw (E39) Base - 4,000K - Cool White - Clear - Switch Start	1	Philips	EA	$ 19.98

CATALOG % DISCOUNT FOR HALIDE:	15%

Docusign Envelope ID: 7DB78693-DAE7-42B3-9A3F-8F648886EDB2

16169 OC
Attachment D.0

MISCELLANEOUS PRICING					
Manufacturing #	**Description**	**Package Qty**	**Manufacturer**	**UOM**	**Unit Price**
71A8473001D	Advance High Pressure Sodium HID Ballast Kit	1	Advance	EA	$ 246.46
71A8172001D	Advance High Pressure Sodium HID Ballast	1	Advance	EA	$ 160.17
71A8453001D	Advance High Pressure Sodium HID Ballast Kit 1 Lamp - 400 watt - 120-480 volt - Core & Coil	1	Advance	EA	$ 251.81
476523	High Pressure Sodium HID 70 watt - 52 volt - BD17 - Medium Screw (E26) Base - 2,100K - Warm White - Clear - Non-Alto - Ceramalux	1	Philips	EA	$ 21.31
368837	1000 watt - E25 - Mogul Screw (E39) Base - 2,100K - Warm White - Clear - ALTO - Ceramalux	1	Philips	EA	$ 74.03
467373	High Pressure Sodium HID Light Bulb 400 watt - ED58 - Mogul Screw (E39) Base - 2,100K - Warm White - Clear - Ceramalux - ALTO	1	Philips	EA	$ 25.26
ICF2S42M2LDK	Electronic Ballast For (1-2) 24-42W Lamps (1) 57W Or 70W Compact Fluorescents With 2G11 G24Q GX24Q GR10Q 2G11/RS Bases FC9T5 FC12T5 Lamps Run At 120-277V (913700508491)	1	Advance	EA	$ 42.84
ICN2P32N35M	Electronic Ballast-2 F32T8 120-277V (913710842702)	1	Advance	EA	$ 17.13
IOPA4P32N35I	Electronic Ballast (4) F32T8 120-277V (913701235501)	1	Advance	EA	$ 23.58
IOPA2P32LWN35I	Electronic Ballast-2 F32T8 120-277V (913701216201)	1	Advance	EA	$ 18.97
IOPA3P32LWN35I	Electronic Ballast-3 F32T8 120-277V (913701245501)	1	Advance	EA	$ 22.49
IOPA4P32LWN35I	Electronic Ballast-4 F32T8 120-277V (913701235601)	1	Advance	EA	$ 23.58
ICN2P32N35I	Electronic Ballast (2) F32T8 120V-277V (913710842701)	1	Advance	EA	$ 14.76

CATALOG % DISCOUNT FOR MISCELLANEOUS:	0%

Docusign Envelope ID: 7DB78693-DAE7-42B3-9A3F-8F648886EDB2

ATTACHMENT B - CORE ITEMS SHEET

COMPANY NAME: Voss Electric dba Voss Lighting

1. Enter your company name.
2. Click the check box for "Yes" under Column A or "NO" under Column B to indicate your ability to bid and provide the specified manufacturer name & number for each item listed.
3. For any item that you marked "NO" under Column B, you should provide an equal alternate manufacturer name & number in Column C and an explanation of how the requested alternate equal meets the specified manufacturer name & number.

FLUORESCENT

SPECIFIED MANUFACTURER NAME & NUMBER		IF NO - PROVIDE ALTERNATE EQUAL MANUFACTURER NAME & NUMBER	EXPLAIN HOW REQUESTED ALTERNATE EQUAL MEETS THE SPECIFIED MANUFACTURER NAME & NUMBER	ITEM	ITEM DESCRIPTION	MANUFACTURER NAME	MANUFACTURER NUMBER	EST ANNUAL QUANTITY	UOM
YES	NO								
	X	Philips - 433978	Same wattage, same output, just longer life. Newer version	1	25 watt - 48" - T8 - Medium Bi-Pin (G13) Base - 4,100K - Cool White - 800 Series - Energy Advantage - ALTO	Philips	280784	17,334	EA
X				2	32 watt - 48" - T8 - Medium Bi-Pin (G13) Base - 4,100K - Cool White - ALTO II	Philips	479626	15,305	EA
X				3	32 watt - 48" - T8 - Medium Bi-Pin (G13) Base - 4,100K - Cool White - 800 Series - ALTO - PlusHV	Philips	281790	5,586	EA
X				4	Instant Start Electronic Fluorescent Ballast For F32T8 F17T8 Lamps Run At 120-277V (913701220301)	Advance	ICN4P32N35I	921	EA
X				5	25 watt - 48" - T8 - Medium Bi-Pin (G13) Base - 4,100K - Cool White - ALTO - Energy Adv - Extra Long Life	Philips	433978	3,000	EA
X				6	32 watt - 48" - T8 - Medium Bi-Pin (G13) Base - 5,000K - Daylight - 800 Series- ALTO - PlusHV	Philips	281815	1,440	EA
X				7	25 watt - 36" - T8 - Medium Bi-Pin (G13) Base - 4,100K - Cool White - 800 Series - ALTO	Philips	281915	1,336	EA
X				8	40 watt - 48" - T12 - Medium Bi-Pin (G13) Base - 4,100K - Cool White - Supreme - ALTO	Philips	423889	1,545	EA
X				9	54 watt - 48" - T5 - Mini Bi-Pin (G5) Base - 5,000K - Daylight - 800 Series - High Output - Silhouette - ALTO	Philips	135103	480	EA
X				10	Instant Start Fluorescent 120-277V Electronic Ballast For F32T8 F40T8 F17T8 Bulbs (913701220201)	Advance	ICN3P32N35I	335	EA
X				11	32 watt - 22.5" - T8 - Medium Bi-Pin (G13) Base - 4,100K - Cool White - 800 Series - ALTO - U-Bent	Philips	379024	280	EA
X				12	17 watt - 24" - T8 - Medium Bi-Pin (G13) Base - 4,100K - Cool White - 800 Series - ALTO	Philips	281899	390	EA
X				13	32 watt - 48" - T8 - Medium Bi-Pin (G13) Base - 5,000K - Daylight - ALTO II	Philips	479624	1,170	EA
X				14	15.5 watt - 22.6" - T8 - Medium Bi-Pin (2G13) Base - 4,000K - Cool White - U-Bent - Ballast Bypass	Philips	535559	120	EA
X				15	Instant Start Electronic Fluorescent Optanium Ballast For F32T8/ES Lamps 120-277V (913701216301)	Advance	IOPA2P32N35I	141	EA
X				16	32 watt - 48" - T8 - Medium Bi-Pin (G13) Base - 3,500K - Neutral White - ALTO II	Philips	479600	750	EA
X				17	Compact 26 watt - PL-C - 4-Pin (G24q-3) Base - 3,500K - Natural White - Double Tube - Cluster - ALTO	Philips	383384	310	EA
X				18	32 watt - 48" - T8 - Medium Bi-Pin (G13) Base - 3,500K - Neutral White - 800 Series - ALTO - Plus	Philips	281675	300	EA
X				19	Compact 26 watt - PL-C - 4-Pin (G24q-3) Base - 4,100K - Cool White - Double Tube - Cluster - ALTO	Philips	383372	264	EA
	X	Philips - 434043	Same wattage, same output, just longer life. Newer version	20	28 watt - 48" - T8 - Medium Bi-Pin (G13) Base - 5,000K - Daylight - 800 Series- Energy Advantage - ALTO	Philips	281055	480	EA
X				21	40 watt - 22.5" - T12 - Medium Bi-Pin (G13) Base - 4,100K - Cool White - Supreme - ALTO - U-Bent	Philips	423087	128	EA
	X	Philips - 434035	Same wattage, same output, just longer life. Newer version	22	28 watt - 48" - T8 - Medium Bi-Pin (G13) Base - 4,100K - Cool White - 800 Series - Energy Advantage - ALT	Philips	281030	420	EA
				23	Instant Start Fluorescent 120-277V Electronic Ballast For-1 F17T8 F25T8 F32T8 F32T8/ES Bulb (913710852301)	Advance	ICN1P32N35I	82	EA
X				24	Compact 40 watt - 120 volt - PL-L - 4-Pin (2G11) Base - 4,100K - Cool White - 800 Series - Single Tube	Philips	300442	100	EA
X				25	75 watt - 96" - T12 - Single Pin (Fat8) Base - 4,100K - Cool White Supreme - High CRI - Slimline - ALTO	Philips	423194	165	EA
X				26	40 watt - 48" - T12 - Medium Bi-Pin (G13) Base - 6,500K - Daylight Deluxe - ALTO	Philips	273599	60	EA
X				27	Rapid Start Fluorescent 120/277V Electronic Ballast For F34T12 F40T12 Bulbs (913710855801)	Advance	ICN2S40N35I	6	EA
X				28	Instant Start Fluorescent 120-277V Electronic Ballast For F72T12 F96T12 F96T12/ES Bulbs (913701261901)	Advance	ICN2P60N35I	3	EA
X				29	Linear Fluorescent Bulb: 2 ft Nominal Lg, T8, 17 W Watt, 4100K, 1,375 lm Light Output, Glass,F17T8/TL841 120V	Philips	281899	50	EA
X				30	F32T8/TL941/ALTO - T8 Fluorescent Lamp F32T8/TL941 120V	Philips	479626	180	EA

LED

SPECIFIED MANUFACTURER NAME & NUMBER		IF NO - PROVIDE ALTERNATE EQUAL MANUFACTURER NAME & NUMBER	EXPLAIN HOW REQUESTED ALTERNATE EQUAL MEETS THE SPECIFIED MANUFACTURER NAME & NUMBER	ITEM	ITEM DESCRIPTION	MANUFACTURER NAME	MANUFACTURER NUMBER	EST ANNUAL QUANTITY	UOM
YES	NO								
	X	Philips - 383125	CFL version as LED option no longer being made	31	5 watt - 120/277 volt - PL-C - 2-Pin (GX23-2) Base - 3,500K - Neutral White - InstantFit	Philips	532333	140	EA

Docusign Envelope ID: 7DB78693-DAE7-42B3-9A3F-8F648886EDB2

X				32	16.5 watt 70-110 volt PL-L 4-Pin (2G11) Base - 3,500K - Natural White - InstantFit	Philips	532903	240	EA
X				33	HCY1421L8CST-UN3-DIM HCY Sealed High Bay LED, 14,000/21,000LM, 80CRI, Color Sel., 0-10V UNV, 120-347	Daybright	911401874482	18	EA
	X	Daybright - 912401592649	Same product just Newer version	34	FluxPanel Selectable LED Lighting, 2' x 2'	Daybright	911401837781	110	EA
	X	Daybright - 912401592650	Same product just Newer version	35	Day-Brite CFI 35-45-50W FluxPanel Selectable LED Lighting, 2' x 4'	Daybright	911401837861	436	EA
X				36	10.5 watt - 120/277 volt - 48" - T8 - Medium Bi-Pin (G13) Base - 4,000K - Cool White - Ballast Bypass - MasterClass - Dimmable	Philips	579458	103	EA
X				37	8.9 watt - 120/270 volt - 48" - T8 - Medium Bi-Pin (G13) Base - 3,500K - Neutral White - Frosted - Dimmable	Philips	565598	440	EA
X				38	9.9 watt - 120/277 volt - 48" - T8 - Medium Bi-Pin (G13) Base - 4,000K - Cool White - Ballast Bypass - CorePro - Dimmable	Philips	579326	540	EA
X				39	16.5 watt - 120/277 volt - 48" - T8 - Medium Bi-Pin (G13) Base - 5,000K - Daylight - Ballast Bypass - MasterClass - Dimmable	Philips	579532	381	EA
X				40	7 watt - 24" - T8 - Medium Bi-Pin (G13) Base - 3,500K - Neutral White - InstantFit - Ballast Compatible - Non-Dimmable	Philips	541821	490	EA
	X	Philips - 589804	Color Select, adjustable base, will work in HO or standard socket	41	42 watt - 120/277 volt - 95" - T8 - Recessed Double Contact (R17d) Base - Base - 5,000K - Daylight - Frosted - CorePro - Non-Dimmable	Philips	575753	281	EA
				42	8.9 watt - 120/277 volt - 48" T8 - Medium Bi-Pin (G13) Base - 5,000K - Daylight - Ballast Compatible - Double Ended - InstantFit - Dimmable	Philips	565614	1,020	EA
X				43	8.9 watt - 48" - T8 - Medium Bi-Pin (G13) Base - 4,000K - Natural White - Dimmable	Philips	565606	1,130	EA
X				44	14.5 watt - 120/277 volt - 48" - T8 - Medium Bi-Pin (G13) Base - 4,000K - Cool White - Ballast Bypass - CorePro - Non-Dimmable	Philips	579425	1,441	EA
	X	Philips - 589804	Color Select, adjustable base, will work in HO or standard socket	45	33 watt - 120/277 volt - 95" - T8 - Single Pin (Fa8) Base - Base - 5,000K - Daylight - Frosted - CorePro - Non-Dimmable	Philips	575738	372	EA
X				46	14.5 watt - 120/277 volt - 48" - T8 - Medium Bi-Pin (G13) Base - 5,000K - Daylight - Ballast Bypass - CorePro - Non-Dimmable	Philips	579433	1,702	EA
	X	Philips - 588939	Updated version	47	LED Light Bulb 8.5 watt LED lamp 50 watt comparable	Philips	5651135	60	EA
	X	Philips - 588657	Updated more efficient version, 14w but the same output	48	Lamp, 16 W, 100 W Incandescent Equivalent, EX26 Single Contact Medium Screw 16 watt LED bulb 100 watt comparable Dimmable	Philips	561019	160	EA

HALIDE

SPECIFIED MANUFACTURER NAME & NUMBER		IF NO - PROVIDE ALTERNATE EQUAL MANUFACTURER NAME & NUMBER	EXPLAIN HOW REQUESTED ALTERNATE EQUAL MEETS THE SPECIFIED MANUFACTURER NAME & NUMBER	ITEM	ITEM DESCRIPTION	MANUFACTURER NAME	MANUFACTURER NUMBER	EST ANNUAL QUANTITY	UOM
YES	NO								
X				49	Metal Halide Ballast 175W M137/M152 Quad Kit (913700503051)	Advance	71A5593001D	3	EA
X				50	Metal Halide Ballast 175W M137/M152 Quad Kit (913700503051)	Advance	71A5993001D	3	EA
X				51	Metal Halide Ballast 100W M90/140 Quad Kit (913700533009)	Advance	71A5390001D	8	EA
X				52	Metal Halide Core And Coil Ballast For-1 400W M59 Lamp Run At 120V/208V/240V/277V/480V (913710414201)	Advance	71A6051001D	9	EA
X				53	Metal Halide HID 100 watt - ED17P - Medium Screw (E26) Base - 4,000K - Cool White - Clear - MasterColor - Protected - Elite	Philips	429936	32	EA
X				54	Metal Halide HID Ballast Kit 1 Lamp - 400 watt - 120/208/240/277 volt	Advance	71A6092001D	5	EA
X				55	Metal Halide HID 330 watt - ED37 - Exclusionary Mogul Screw (EX39) Base - 4,000K - Cool White - Coated - Energy Advantage - AllStart Ceramic	Philips	236935	4	EA
X				56	Metal Halide HID 70 watt - ED17P - Medium Screw (E26) Base - 4,000K - Cool White - Clear - MasterColor - Protected - Elite	Philips	429950	6	EA
X				57	Metal Halide HID 1,000 watt - BT56 - Mogul Screw (E39) Base - 3,700K - Natural White - Clear	Philips	415224	14	EA
X				58	Metal Halide HID 100 watt - ED17 - Medium Screw (E26) Base - 4,200K - Cool White - Clear - MasterColor - Elite	Philips	429886	12	EA
X				59	Metal Halide HID 250 watt - ED28 - Mogul Screw (E39) Base - Clear - 3,800K - Natural White - Pulse Start	Philips	232801	12	EA
X				60	Metal Halide HID 50 watt - ED17 - Medium Screw (E26) Base - 3,000K - Natural White - Clear - MasterColor	Philips	423681	9	EA
X				61	Metal Halide HID 70 watt - BD17 - Medium Screw (E26) Base - 3,000K - Natural White - Clear - MasterColor Elite	Philips	419473	12	EA
X				62	Metal Halide HID 150 watt - ED17P - Medium Screw (E26) Base - 4,000K - Cool White - Clear - Protected - ALTO - Fadeblock - Master Color - Ceramic	Philips	377242	12	EA
X				63	Metal Halide HID 400 watt - ED28 - Mogul Screw (E39) Base - 4,000K - Cool White - Clear - Pulse Start	Philips	232538	13	EA
X				64	Metal Halide HID 20 watt - T3.5 - PGJ5 Base - 3,000K - Natural White - 800 Series - Mini - MasterColor - Ceramic	Philips	140400	12	EA
	X	Philips - 274498 (line 68)	Philips no longer making a frosted version. Use line 68 to replace	65	Metal Halide HID 400 watt - 135 volt - ED37 - Mogul Screw (E39) Base - Frosted - 3,900K - Natural White - Switch Start	Philips	432302	24	EA
X				66	Metal Halide HID 150 watt - BD17 - Medium Screw (E26) Base - 3,700K - Natural White - Clear - Switch Start	Philips	354821	24	EA
X				67	Metal Halide HID 175 watt - BD17 - Medium Screw (E26) Base - 4,000K - Cool White - Clear - Switch Start	Philips	313585	52	EA
X				68	Metal Halide HID 400 watt - ED37 - Mogul Screw (E39) Base - 4,000K - Cool White - Clear - Switch Start	Philips	274498	83	EA
X				69	Metal Halide HID 400 watt - ED28 - Mogul Screw (E39) Base - 4,000K - Cool White - Clear - Pulse Start	Philips	232520	24	EA
X				70	Metal Halide HID 400 watt - ED28 - Mogul Screw (E39) Base - Clear - 4,000K - Cool White - Switch Start	Philips	425023	57	EA
X				71	Metal Halide HID 250 watt - ED28 - Mogul Screw (E39) Base - 4,000K - Cool White - Clear - Switch Start	Philips	274845	98	EA

MISCELLANEOUS

SPECIFIED MANUFACTURER NAME & NUMBER		IF NO - PROVIDE ALTERNATE EQUAL MANUFACTURER NAME & NUMBER	EXPLAIN HOW REQUESTED ALTERNATE EQUAL MEETS THE SPECIFIED MANUFACTURER NAME & NUMBER	ITEM	ITEM DESCRIPTION	MANUFACTURER NAME	MANUFACTURER NUMBER	EST ANNUAL QUANTITY	UOM
YES	NO								
X				72	Advance High Pressure Sodium HID Ballast Kit	Advance	71A8473001D	3	EA

Docusign Envelope ID: 7DB78693-DAE7-42B3-9A3F-8F648886EDB2

X				73	Advance High Pressure Sodium HID Ballast	Advance	71A8172001D	3	EA
X				74	Advance High Pressure Sodium HID Ballast Kit 1 Lamp - 400 watt - 120-480 volt - Core & Coil	Advance	71A8453001D	4	EA
X				75	High Pressure Sodium HID 70 watt - 52 volt - BD17 - Medium Screw (E26) Base - 2,100K - Warm White - Clear - Non-Alto - Ceramalux	Philips	476523	10	EA
X				76	1000 watt - E25 - Mogul Screw (E39) Base - 2,100K - Warm White - Clear - ALTO - Ceramalux	Philips	368837	5	EA
X				77	High Pressure Sodium HID Light Bulb 400 watt - ED58 - Mogul Screw (E39) Base - 2,100K - Warm White - Clear - Ceramalux - ALTO	Philips	467373	40	EA
X				78	Electronic Ballast For (1-2) 24-42W Lamps (1) 57W Or 70W Compact Fluorescents With 2G11 G24Q GX24Q GR10Q 2G11/RS Bases FC9T5 FC12T5 Lamps Run At 120-277V (913700508491)	Advance	ICF2S42MZLDK	30	EA
X				79	Electronic Ballast-2 F32T8 120-277V (913710842702)	Advance	ICN2P32N35M	100	EA
X				80	Electronic Ballast (4) F32T8 120-277V (913701235501)	Advance	IOPA4P32N35I	92	EA
X				81	Electronic Ballast-2 F32T8 120-277V (913701215201)	Advance	IOPA2P32LWN35I	480	EA
X				82	Electronic Ballast-3 F32T8 120-277V (913701245501)	Advance	IOPA3P32LWN35I	440	EA
X				83	Electronic Ballast-4 F32T8 120-277V (913701235801)	Advance	IOPA4P32LWN35I	390	EA
X				84	Electronic Ballast (2) F32T8 120V-277V (913710842701)	Advance	ICN2P32N35I	497	EA

Docusign Envelope ID: 7DB78693-DAE7-42B3-9A3F-8F648886EDB2

Final Bid Submission Report for Light Bulbs, Ballasts, and Retrofit Kits 121834 OR

Started: 5/21/2025 10:00 AM (CDT)

Ended: 5/21/2025 10:38 AM (CDT)

Light Bulbs, Ballast, and Retrofit Kits

FLUORESCENT

Rank	Company	Value	Date/Time
1	Voss Lighting	$184,705.38	5/21/2025 10:34:55 AM

Pricing Sheet Bids

Mfg #	Description	Pkg Qty	Manufacturer	Quantity	UOM	List Price	% Off	Total Final Cost
280784	25 watt - 48" - T8 - Medium Bi-Pin (G13) Base - 4,100K - Cool White - 800 Series - Energy Advantage - ALTO	1	Philips	17334	EA	$4.59	26.00%	$58,876.66
479626	32 watt - 48" - T8 - Medium Bi-Pin (G13) Base - 4,100K - Cool White - ALTO II	1	Philips	15305	EA	$3.10	26.00%	$35,109.67
281790	32 watt - 48" - T8 - Medium Bi-Pin (G13) Base - 4,100K - Cool White - 800 Series - ALTO - PlusHV	1	Philips	5586	EA	$3.82	26.00%	$15,790.50
ICN4P32N35I	Instant Start Electronic Fluorescent Ballast For F32T8 F17T8 Lamps Run At 120-277V (913701220301)	1	Advance	921	EA	$19.37	26.00%	$13,201.43
433978	25 watt - 48" - T8 - Medium Bi-Pin (G13) Base - 4,100K - Cool White - ALTO - Energy Adv - Extra Long Life	1	Philips	3000	EA	$4.59	26.00%	$10,189.80
281816	32 watt - 48" - T8 - Medium Bi-Pin (G13) Base - 5,000K - Daylight - 800 Series- ALTO - PlusHV	1	Philips	1440	EA	$4.44	26.00%	$4,731.26
281915	25 watt - 36" - T8 - Medium Bi-Pin (G13) Base - 4,100K - Cool White - 800 Series - ALTO	1	Philips	1336	EA	$6.32	26.00%	$6,248.20

Docusign Envelope ID: 7DB78693-DAE7-42B3-9A3F-8F648886EDB2

423889	40 watt - 48" - T12 - Medium Bi-Pin (G13) Base - 4,100K - Cool White - Supreme - ALTO	1	Philips	1545	EA	$4.03	26.00%	$4,607.50
135103	54 watt - 48" - T5 - Mini Bi-Pin (G5) Base - 5,000K - Daylight - 800 Series - High Output - Silhouette - ALTO	1	Philips	480	EA	$6.37	26.00%	$2,262.62
ICN3P32N35I	Instant Start Fluorescent 120-277V Electronic Ballast For F32T8 F40T8 F17T8 Bulbs (913701220201)	1	Advance	335	EA	$17.06	26.00%	$4,229.17
379024	32 watt - 22.5" - T8 - Medium Bi-Pin (G13) Base - 4,100K - Cool White - 800 Series - ALTO - U-Bent	1	Philips	280	EA	$18.04	26.00%	$3,737.89
281899	17 watt - 24" - T8 - Medium Bi-Pin (G13) Base - 4,100K - Cool White - 800 Series - ALTO	1	Philips	390	EA	$7.72	26.00%	$2,227.99
479634	32 watt - 48" - T8 - Medium Bi-Pin (G13) Base - 5,000K - Daylight - ALTO II	1	Philips	1170	EA	$3.60	26.00%	$3,116.88
535559	15.5 watt - 22.6" - T8 - Medium Bi-Pin (2G13) Base - 4,000K - Cool White - U-Bent - Ballast Bypass	1	Philips	120	EA	$27.83	26.00%	$2,471.30
IOPA2P32N35I	Instant Start Electronic Fluorescent Optanium Ballast For F32T8/ES Lamps 120-277V (913701216301)	1	Advance	141	EA	$22.02	26.00%	$2,297.57
479600	32 watt - 48" - T8 - Medium Bi-Pin (G13) Base - 3,500K - Neutral White - ALTO II	1	Philips	750	EA	$3.60	26.00%	$1,998.00
383364	Compact 26 watt - PL-C - 4-Pin (G24q-3) Base - 3,500K - Natural White - Double Tube - Cluster - ALTO	1	Philips	310	EA	$5.41	26.00%	$1,241.05
281675	32 watt - 48" - T8 - Medium Bi-Pin (G13) Base - 3,500K - Neutral White - 800 Series - ALTO - Plus	1	Philips	300	EA	$4.44	26.00%	$985.68

Docusign Envelope ID: 7DB78693-DAE7-42B3-9A3F-8F648886EDB2

383372	Compact 26 watt - PL-C - 4-Pin (G24q-3) Base - 4,100K - Cool White - Double Tube - Cluster - ALTO	1	Philips	264	EA	$5.41	26.00%	$1,056.90
281055	28 watt - 48" - T8 - Medium Bi-Pin (G13) Base - 5,000K - Daylight - 800 Series- Energy Advantage - ALTO	1	Philips	480	EA	$4.68	26.00%	$1,662.34
423087	40 watt - 22.5" - T12 - Medium Bi-Pin (G13) Base - 4,100K - Cool White - Supreme - ALTO - U-Bent	1	Philips	128	EA	$19.79	26.00%	$1,874.51
281030	28 watt - 48" - T8 - Medium Bi-Pin (G13) Base - 4,100K - Cool White - 800 Series - Energy Advantage - ALT	1	Philips	420	EA	$4.68	26.00%	$1,454.54
ICN1P32N35I	Instant Start Fluorescent 120-277V Electronic Ballast For-1 F17T8 F25T8 F32T8 F32T8/ES Bulb (913710852301)	1	Advance	82	EA	$20.38	26.00%	$1,236.66
300442	Compact 40 watt - 120 volt - PL-L - 4-Pin (2G11) Base - 4,100K - Cool White - 800 Series - Single Tube	1	Philips	100	EA	$12.46	26.00%	$922.04
423194	75 watt - 96" - T12 - Single Pin (Fa8) Base - 4,100K - Cool White Supreme - High CRI - Slimline - ALTO	1	Philips	165	EA	$15.52	26.00%	$1,894.99
273599	40 watt - 48" - T12 - Medium Bi-Pin (G13) Base - 6,500K - Daylight Deluxe - ALTO	1	Philips	60	EA	$4.83	26.00%	$214.45
ICN2S40N35I	Rapid Start Fluorescent 120/277V Electronic Ballast For F34T12 F40T12 Bulbs (913710855801)	1	Advance	6	EA	$31.49	26.00%	$139.82
ICN2P60N35I	Instant Start Fluorescent 120-277V Electronic Ballast For F72T12 F96T12 F96T12/ES Bulbs (913701261901)	1	Advance	3	EA	$46.69	26.00%	$103.65

Docusign Envelope ID: 7DB78693-DAE7-42B3-9A3F-8F648886EDB2

281899	Linear Fluorescent Bulb: 2 ft Nominal Lg, T8, 17 W Watt, 4100K, 1,375 lm Light Output, Glass,F17T8/TL841 120V	1	Philips	60	EA	$7.72	26.00%	$342.77
479626	F32T8/TL941/ALTO - T8 Fluorescent Lamp F32T8/TL941 120V	1	Philips	180	EA	$3.60	26.00%	$479.52

LED

Rank	Company	Value	Date/Time
1	Voss Lighting	$98,264.62	5/21/2025 10:35:09 AM

Pricing Sheet Bids

Mfg #	Description	Pkg Qty	Manufacturer	Quantity	UOM	List Price	% Off	Total Final Cost
532333	5 watt - 120/277 volt - PL-C - 2-Pin (GX23-2) Base - 3,500K - Neutral White - InstantFit	1	Philips	140	EA	$10.84	28.00%	$1,092.67
532903	16.5 watt 70-110 volt PL-L 4-Pin (2G11) Base - 3,500K - Natural White - InstantFit	1	Philips	240	EA	$19.64	28.00%	$3,393.79
911401874482	HCY1421L8CST-UN3-DIM HCY Sealed High Bay LED, 14,000/21,000LM, 80CRI, Color Sel., 0-10V UNV, 120-347	1	Daybright	18	EA	$168.46	28.00%	$2,183.24
911401837781	FluxPanel Selectable LED Lighting, 2' x 2'	1	Daybright	110	EA	$57.34	28.00%	$4,541.33
911401837881	Day-Brite CFI 35-45-50W FluxPanel Selectable LED Lighting, 2' x 4'	1	Daybright	436	EA	$70.00	28.00%	$21,974.40
579458	10.5 watt - 120/277 volt - 48" - T8 - Medium Bi-Pin (G13) Base - 4,000K - Cool White - Ballast Bypass - MasterClass - Dimmable	1	Philips	103	EA	$16.23	28.00%	$1,203.62
565598	8.9 watt - 120/270 volt - 48" - T8 - Medium Bi-Pin (G13) Base - 3,500K - Neutral White - Frosted - Dimmable	1	Philips	440	EA	$11.73	28.00%	$3,716.06

Docusign Envelope ID: 7DB78693-DAE7-42B3-9A3F-8F648886EDB2

579326	9.9 watt - 120/277 volt - 48" - T8 - Medium Bi-Pin (G13) Base - 4,000K - Cool White - Ballast Bypass - CorePro - Dimmable	1	Philips	540	EA	$7.31	28.00%	$2,842.13
579532	16.5 watt - 120/277 volt - 48" - T8 - Medium Bi-Pin (G13) Base - 5,000K - Daylight - Ballast Bypass - MasterClass - Dimmable	1	Philips	381	EA	$16.93	28.00%	$4,644.24
541821	7 watt - 24" - T8 - Medium Bi-Pin (G13) Base - 3,500K - Neutral White - InstantFit - Ballast Compatible - Non-Dimmable	1	Philips	490	EA	$13.19	28.00%	$4,653.43
575753	42 watt - 120/277 volt - 96" - T8 - Recessed Double Contact (R17d) Base - Base - 5,000K - Daylight - Frosted - CorePro - Non-Dimmable	1	Philips	261	EA	$30.21	28.00%	$5,677.06
565614	8.9 watt - 120/277 volt - 48" T8 - Medium Bi-Pin (G13) Base - 5,000K - Daylight - Ballast Compatible - Double Ended - InstantFit - Dimmable	1	Philips	1020	EA	$10.11	28.00%	$7,424.78
565606	8.9 watt - 48" - T8 - Medium Bi-Pin (G13) Base - 4,000K - Natural White - Dimmable	1	Philips	1130	EA	$10.11	28.00%	$8,225.50
579425	14.5 watt - 120/277 volt - 48" - T8 - Medium Bi-Pin (G13) Base - 4,000K - Cool White - Ballast Bypass - CorePro - Non-Dimmable	1	Philips	1441	EA	$8.01	28.00%	$8,310.54
575738	33 watt - 120/277 volt - 96" - T8 - Single Pin (Fa8) Base - Base - 5,000K - Daylight - Frosted - CorePro - Non-Dimmable	1	Philips	372	EA	$30.21	28.00%	$8,091.45
579433	14.5 watt - 120/277 volt - 48" - T8 - Medium Bi-Pin (G13) Base - 5,000K - Daylight - Ballast Bypass - CorePro - Non-Dimmable	1	Philips	1702	EA	$7.70	28.00%	$9,435.89

Docusign Envelope ID: 7DB78693-DAE7-42B3-9A3F-8F648886EDB2

5651135	LED Light Bulb 8.5 watt LED lamp 60 watt comparable	1	Philips	60	EA	$1.54	28.00%	$66.53
561019	Lamp, 16 W, 100 W Incandescent Equivalent, EX26 Single Contact Medium Screw 16 watt LED bulb 100 watt comparable Dimmable	1	Philips	160	EA	$6.84	28.00%	$787.97

HALIDE

Rank	Company	Value	Date/Time
2	Voss Lighting	$21,139.84	5/21/2025 10:21:38 AM

Pricing Sheet Bids								
Mfg #	**Description**	**Pkg Qty**	**Manufacturer**	**Quantity**	**UOM**	**List Price**	**% Off**	**Total Final Cost**
71A5593001D	Metal Halide Ballast 175W M137/M152 Quad Kit (913700503051)	1	Advance	3	EA	$222.58	15.00%	$567.58
71A5993001D	Metal Halide Ballast 175W M137/M152 Quad Kit (913700503051)	1	Advance	3	EA	$291.58	15.00%	$743.53
71A5390001D	Metal Halide Ballast 100W M90/140 Quad Kit (913700533009)	1	Advance	6	EA	$154.93	15.00%	$790.14
71A6051001D	Metal Halide Core And Coil Ballast For-1 400W M59 Lamp Run At 120V/208V/240V/277V/480V (913710414201)	1	Advance	9	EA	$162.94	15.00%	$1,246.49
429936	Metal Halide HID 100 watt - ED17P - Medium Screw (E26) Base - 4,000K - Cool White - Clear - MasterColor - Protected - Elite	1	Philips	32	EA	$58.69	15.00%	$1,596.37
71A6092001D	Metal Halide HID Ballast Kit 1 Lamp - 400 watt - 120/208/240/277 volt	1	Advance	5	EA	$205.12	15.00%	$871.76

Docusign Envelope ID: 7DB78693-DAE7-42B3-9A3F-8F648886EDB2

236935	Metal Halide HID 330 watt - ED37 - Exclusionary Mogul Screw (EX39) Base - 4,000K - Cool White - Coated - Energy Advantage - AllStart Ceramic	1	Philips	4	EA	$107.11	15.00%	$364.17
429950	Metal Halide HID 70 watt - ED17P - Medium Screw (E26) Base - 4,000K - Cool White - Clear - MasterColor - Protected - Elite	1	Philips	6	EA	$75.47	15.00%	$384.90
415224	Metal Halide HID 1,000 watt - BT56 - Mogul Screw (E39) Base - 3,700K - Natural White - Clear	1	Philips	14	EA	$57.76	15.00%	$687.34
429886	Metal Halide HID 100 watt - ED17 - Medium Screw (E26) Base - 4,200K - Cool White - Clear - MasterColor - Elite	1	Philips	12	EA	$68.59	15.00%	$699.62
232801	Metal Halide HID 250 watt - ED28 - Mogul Screw (E39) Base - Clear - 3,800K - Natural White - Pulse Start	1	Philips	12	EA	$63.22	15.00%	$644.84
423681	Metal Halide HID 50 watt - ED17 - Medium Screw (E26) Base - 3,000K - Natural White - Clear - MasterColor	1	Philips	9	EA	$75.47	15.00%	$577.35
419473	Metal Halide HID 70 watt - BD17 - Medium Screw (E26) Base - 3,000K - Natural White - Clear - MasterColor Elite	1	Philips	12	EA	$71.88	15.00%	$733.18
377242	Metal Halide HID 150 watt - ED17P - Medium Screw (E26) Base - 4,000K - Cool White - Clear - Protected - ALTO - Fadeblock - Master Color - Ceramic	1	Philips	12	EA	$64.93	15.00%	$662.29
232538	Metal Halide HID 400 watt - ED28 - Mogul Screw (E39) Base - 4,000K - Cool White - Clear - Pulse Start	1	Philips	13	EA	$74.66	15.00%	$824.99
140400	Metal Halide HID 20 watt - T3.5 - PGJ5 Base - 3,000K - Natural White - 800 Series - Mini - MasterColor - Ceramic	1	Philips	12	EA	$55.39	15.00%	$564.98

Docusign Envelope ID: 7DB78693-DAE7-42B3-9A3F-8F648886EDB2

432302	Metal Halide HID 400 watt - 135 volt - ED37 - Mogul Screw (E39) Base - Frosted - 3,900K - Natural White - Switch Start	1	Philips	24	EA	$32.51	15.00%	$663.20
354621	Metal Halide HID 150 watt - BD17 - Medium Screw (E26) Base - 3,700K - Natural White - Clear - Switch Start	1	Philips	24	EA	$45.47	15.00%	$927.59
313585	Metal Halide HID 175 watt - BD17 - Medium Screw (E26) Base - 4,000K - Cool White - Clear - Switch Start	1	Philips	52	EA	$21.29	15.00%	$941.02
274498	Metal Halide HID 400 watt - ED37 - Mogul Screw (E39) Base - 4,000K - Cool White - Clear - Switch Start	1	Philips	83	EA	$27.99	15.00%	$1,974.69
232520	Metal Halide HID 400 watt - ED28 - Mogul Screw (E39) Base - 4,000K - Cool White - Clear - Pulse Start	1	Philips	24	EA	$62.28	15.00%	$1,270.51
426023	Metal Halide HID 400 watt - ED28 - Mogul Screw (E39) Base - Clear - 4,000K - Cool White - Switch Start	1	Philips	57	EA	$29.84	15.00%	$1,445.75
274845	Metal Halide HID 250 watt - ED28 - Mogul Screw (E39) Base - 4,000K - Cool White - Clear - Switch Start	1	Philips	98	EA	$23.50	15.00%	$1,957.55

Docusign Envelope ID: 7DB78693-DAE7-42B3-9A3F-8F648886EDB2

MISCELLANEOUS

Rank	Company	Value	Date/Time
1	Voss Lighting	$44,521.46	5/21/2025 9:17:13 AM

Pricing Sheet Bids								
Mfg #	**Description**	**Pkg Qty**	**Manufacturer**	**Quantity**	**UOM**	**List Price**	**% Off**	**Total Final Cost**
71A8473001D	Advance High Pressure Sodium HID Ballast Kit	1	Advance	3	EA	$246.46	0.00%	$739.38
71A8172001D	Advance High Pressure Sodium HID Ballast	1	Advance	3	EA	$160.17	0.00%	$480.51
71A8453001D	Advance High Pressure Sodium HID Ballast Kit 1 Lamp - 400 watt - 120-480 volt - Core & Coil	1	Advance	4	EA	$251.81	0.00%	$1,007.24
476523	High Pressure Sodium HID 70 watt - 52 volt - BD17 - Medium Screw (E26) Base - 2,100K - Warm White - Clear - Non-Alto - Ceramalux	1	Philips	10	EA	$21.31	0.00%	$213.10
368837	1000 watt - E25 - Mogul Screw (E39) Base - 2,100K - Warm White - Clear - ALTO - Ceramalux	1	Philips	5	EA	$74.03	0.00%	$370.15
467373	High Pressure Sodium HID Light Bulb 400 watt - ED58 - Mogul Screw (E39) Base - 2,100K - Warm White - Clear - Ceramalux - ALTO	1	Philips	40	EA	$25.26	0.00%	$1,010.40
ICF2S42M2LDK	Electronic Ballast For (1-2) 24-42W Lamps (1) 57W Or 70W Compact Fluorescents With 2G11 G24Q GX24Q GR10Q 2G11/RS Bases FC9T5 FC12T5 Lamps Run At 120-277V (913700508491)	1	Advance	30	EA	$42.84	0.00%	$1,285.20
ICN2P32N35M	Electronic Ballast-2 F32T8 120-277V (913710842702)	1	Advance	100	EA	$17.13	0.00%	$1,713.00

Docusign Envelope ID: 7DB78693-DAE7-42B3-9A3F-8F648886EDB2

IOPA4P32N35I	Electronic Ballast (4) F32T8 120-277V (913701235501)	1	Advance	92	EA	$23.58	0.00%	$2,169.36
IOPA2P32LWN35I	Electronic Ballast-2 F32T8 120-277V (913701216201)	1	Advance	480	EA	$18.97	0.00%	$9,105.60
IOPA3P32LWN35I	Electronic Ballast-3 F32T8 120-277V (913701245501)	1	Advance	440	EA	$22.49	0.00%	$9,895.60
IOPA4P32LWN35I	Electronic Ballast-4 F32T8 120-277V (913701235601)	1	Advance	390	EA	$23.58	0.00%	$9,196.20
ICN2P32N35I	Electronic Ballast (2) F32T8 120V-277V (913710842701)	1	Advance	497	EA	$14.76	0.00%	$7,335.72

OVERALL TOTAL

Rank	Company	Value	Date/Time
1	Voss Lighting	$348,631.30	5/21/2025 10:35:10 AM

FOREIGN ADVERSARY CONTRACTING PROHIBITION ACT
CERTIFICATION FORM FOR
TECHNOLOGY RELATED PRODUCT OR SERVICES

For the purposes of complying with the Foreign Adversary Contracting Prohibition Act ("the Act"), Neb. Rev. Stat. §73-901 to §73-907, I attest and certify as follows:

Name of Company _____

Check all that apply:

☐ I am authorized to attest and certify as the owner of the Company, in whole or in part, or as an authorized representative of the Company, to make the certifications required herein.

☐ The Company is providing technology related products and/or services to the public entity and is not a scrutinized company as defined in the Act; it is not subcontracting with a scrutinized company under the Act; and the technology related products and/or services provided herein do not originate with a scrutinized company under the Act.

☐ The Company is not providing technology related goods or services as defined under the Act.

☐ The Company is a scrutinized company and has entered into an Agreement or an Agreement Renewal with the public entity to provide a technology related good manufactured by a scrutinized company that meets the exception for the provision of a technology related good by a scrutinized company.

☐ I hereby attest and certify on behalf of the Company that the responses and information provided on this form are true, complete, and accurate. The Company understands that any scrutinized company that violates this Act or that violates the certification may be subject to action by the Nebraska Attorney General, civil penalty, and that such violation may void the contract.

PRINT NAME: _____
(First, Middle, Last)

SIGNATURE: _____

TITLE: _____

DATE: _____

FOREIGN ADVERSARY CONTRACTING PROHIBITION ACT
CERTIFICATION FORM FOR
TECHNOLOGY RELATED PRODUCT OR SERVICES

For the purposes of complying with the Foreign Adversary Contracting Prohibition Act ("the Act"), Neb. Rev. Stat. §73-901 to §73-907, I attest and certify as follows:

Name of Company Voss Electric CO.

Check all that apply:

☑ I am authorized to attest and certify as the owner of the Company, in whole or in part, or as an authorized representative of the Company, to make the certifications required herein.

☐ The Company is providing technology related products and/or services to the public entity and is not a scrutinized company as defined in the Act; it is not subcontracting with a scrutinized company under the Act; and the technology related products and/or services provided herein do not originate with a scrutinized company under the Act.

☑ The Company is not providing technology related goods or services as defined under the Act.

☐ The Company is a scrutinized company and has entered into an Agreement or an Agreement Renewal with the public entity to provide a technology related good manufactured by a scrutinized company that meets the exception for the provision of a technology related good by a scrutinized company.

☑ I hereby attest and certify on behalf of the Company that the responses and information provided on this form are true, complete, and accurate. The Company understands that any scrutinized company that violates this Act or that violates the certification may be subject to action by the Nebraska Attorney General, civil penalty, and that such violation may void the contract.

PRINT NAME: Robert L. Jensen
(First, Middle, Last)

SIGNATURE: Robert L. Jensen

TITLE: President

DATE: 2/19/26

WH 26-10 Introduce: 4-23-26

RESOLUTION NO.

BE IT RESOLVED by the Board of Representatives of the West Haymarket Joint Public Agency:

That the attached Contract between the West Haymarket Joint Public Agency and Arrowhead Construction, for a new mezzanine storage loft at the Pinnacle Bank Arena, for a total amount not to exceed $42,000.00, pursuant to Bid No. 25-193, is hereby approved and the Chairperson of the West Haymarket Joint Public Agency Board of Representatives is hereby authorized to execute said Contract.

Adopted this _____ day of April, 2026.

Introduced by:

_____

Approved as to Form & Legality:

West Haymarket Joint Public Agency
Board of Representatives

_____
Legal Counsel for
West Haymarket Joint Public Agency

_____
Leirion Gaylor Baird

_____
Tim Clare

_____
Tom Beckius

Contract Documents

West Haymarket Joint Public Agency
Lincoln, Nebraska

New Mezzanine Storage Loft, Pinnacle Bank Arena
Bid No. 25-193

Arrowhead Construction
1267 280th
Seward, NE 68434
(402) 580-3397

West Haymarket Joint Public Agency
Lincoln, Nebraska
Contract Agreement

THIS CONTRACT, made and entered into by and between **Arrowhead Contraction, 1267 280th, Seward NE 68434,** hereinafter called the Contractor, and West Haymarket Joint Public Agency, Lincoln, Nebraska, hereinafter called JPA.

WHEREAS, JPA has caused to be prepared, in accordance with law, Specifications, Plans, and other Contract Documents for the Work herein described, and has approved and adopted said documents and has caused to be published an advertisement for and in connection with said Work, to-wit:

New Mezzanine Storage Loft, Pinnacle Bank Arena, Bid No. 25-193

and,

WHEREAS, the Contractor, in response to such advertisement, has submitted to JPA, in the manner and at the time specified, a sealed Proposal/Supplier Response in accordance with the terms of said advertisement; and,

WHEREAS, JPA, in the manner prescribed by law has examined and canvassed the Proposals/Supplier Responses submitted in response to such advertisement, and as a result of such canvass has determined and declared the Contractor to be the lowest responsible bidder for the said Work for the sum or sums named in the Contractor's Proposal/Supplier Response, a copy thereof being attached to and made a part of this Contract;

NOW, THEREFORE, in consideration of the sums to be paid to the Contractor and the mutual covenants herein contained, the Contractor and JPA have agreed and hereby agree as follows:

1. The Contractor agrees to (a) furnish all tools, equipment, supplies, superintendence, transportation, and other construction accessories, services, and facilities; (b) furnish all materials, supplies, and equipment specified to be incorporated into and form a permanent part of the complete work; (c) provide and perform all necessary labor in a substantial and workmanlike manner and in accordance with the provisions of the Contract Documents; and (d) execute, construct, and complete all Work included in and covered by JPA's award of this Contract to the Contractor, such award being based on the acceptance by JPA of the Contractor's Proposal, or part thereof, as follows:

Agreement to Full Proposal

2. The JPA agrees to pay to the Contractor for the performance of the Work embraced in this Contract, the Contractor agrees to accept as full compensation therefore, the following sums and prices for all Work covered by and included in the Contract award and designated above, payment thereof to be made in the manner provided by JPA:

   The JPA will pay for products/services, according to the Line Item pricing as listed in Contractors Proposal/Supplier Response, a copy thereof being attached to and made a part of this Contract for a total of $42,000.00.

3. EQUAL EMPLOYMENT OPPORTUNITY: In connection with the carrying out of this project, the Contractor shall not discriminate against any employee, applicant for employment, or any other person because of race, color, religion, sex, national origin, ancestry, disability, age or marital status. The Contractor will take affirmative action to ensure that applicants are employed, and that employees are treated during employment, without regard to their race, color, religion, sex, national origin, ancestry, disability, age or marital status. Such action shall include, but not be limited to, the following:

employment, upgrading, demotion or transfer; recruitment or recruitment advertising; layoff or termination; rates of pay or other compensation; and selection for training, including apprenticeship.

4. E-VERIFY: In accordance with Neb. Rev. Stat. 4-108 through 4-114, the contractor agrees to register with and use a federal immigration verification system, to determine the work eligibility status of new employees performing services within the state of Nebraska. A federal immigration verification system means the electronic verification of the work authorization program of the Illegal Immigration Reform and Immigrant Responsibility Act of 1996, 8 U.S.C. 1324 a, otherwise known as the E-Verify Program, or an equivalent federal program designated by the United States Department of Homeland Security or other federal agency authorized to verify the work eligibility status of a newly hired employee pursuant to the Immigration Reform and Control Act of 1986. The Contractor shall not discriminate against any employee or applicant for employment to be employed in the performance of this section pursuant to the requirements of state law and 8 U.S.C.A 1324b. The contractor shall require any subcontractor to comply with the provisions of this section.

5. GUARANTEE: A performance and payment bond in the full amount of the contract shall be required for all construction contracts. These bonds shall remain in effect during the guarantee period as stated in the specifications. Once the project is completed, the Contractor may submit a maintenance bond in place of the performance bond.

6a. TERMINATION FOR CAUSE

a) JPA may terminate the Contract if the Contractor:
   1. Refuses or fails to supply enough properly skilled workers or proper materials;
   2. Fails to make payment to Subcontractors for materials or labor in accordance with the respective agreements between the Contractor and the Subcontractors;
   3. Disregards laws, ordinances, or rules, regulations or orders of a public authority having jurisdiction; or
   4. Otherwise commits a substantial breach of any provision of the Contract Documents.

b) When any of the above reasons exist, JPA without prejudice to any other rights or remedies of JPA may (after giving the Contractor and the Contractor's surety, if any, seven days' written notice) terminate employment of the Contractor. In addition JPA may (subject to any prior rights of the surety):
   1. Take possession of the site and of all materials, equipment, tools, and construction equipment and machinery thereon owned by the Contractor;
   2. Accept assignment of subcontracts; and
   3. Finish the Work by whatever reasonable method JPA may deem expedient.

c) If the Contract is terminated by JPA as provided in this section, Contractor shall not be entitled to receive any further payment until the expiration of 35 days after Final Completion and acceptance of all Work by JPA.

d) If the unpaid balance of the Contract Sum exceeds the cost of completing the Work, including all additional costs and expenses made necessary thereby, including costs for JPA staff time, plus all losses sustained, including any liquidated damages provided under the Contract Documents, such excess shall be paid to Contractor. If such costs, expenses, losses, and liquidated damages exceed the unpaid balance of the Contract Sum, Contractor shall pay such excess to JPA.

e) If, after termination of the Contractor's right to proceed, it is determined that the Contractor was not in default, or that the delay was excusable, the rights and obligations of the parties will be the same as if the termination has been issued for the convenience of JPA.

f) No termination or action taken by JPA after termination shall prejudice any other rights or remedies of JPA provided by law or by the Contract Documents upon such termination; and JPA may proceed against Contractor to recover all losses suffered by JPA.

6b. TERMINATION BY JPA FOR CONVENIENCE

a) JPA may at its option, terminate this Contract in whole or in part at any time without cause by written notice thereof to the Contractor.

b) Upon any such termination, the Contractor agrees to waive any claims for damages, including loss of anticipated profits, on account thereof, and as the sole right and remedy of the Contractor, JPA shall pay Contractor in accordance with this Paragraph. The provisions of the Contract which by their nature survive final acceptance of the Work, shall remain in full force and effect after such termination to the extent provided in such provisions.

c) Upon receipt of any such notice of termination, the Contractor shall, unless the Notice directs otherwise, immediately:
   1. Discontinue the Work to the extent specified by JPA;
   2. Place no further orders or subcontracts for materials, equipment, services or facilities, except as may be necessary for completion of that portion of the Work, if any, JPA has directed not to be discontinued;
   3. Promptly make every reasonable effort to procure cancellation upon satisfactory terms as determined by JPA of all orders and subcontracts not related to that portion of the Work, if any, JPA has directed not to be discontinued;
   4. Do only such other activity as may be necessary to preserve and protect work already in progress and to protect materials and plants and equipment on the Project Site or in transit thereto.

d) Upon such termination, the obligations of the Contract shall continue as to portions of the Work already performed and as to bona fide obligations the Contractor assumed prior to the date of termination.

e) Upon termination, JPA shall pay the Contractor the full cost of all Work properly done by the Contractor to the date of termination not previously paid for by JPA. If at the date of such termination the Contractor has properly prepared or fabricated off site any goods for subsequent incorporation in the Work, JPA may direct the Contractor to deliver such goods to the Site or to such other place as JPA may reasonably determine, whereupon JPA shall pay to the Contractor the cost for such goods and materials.

f) Upon such termination, JPA shall pay to Contractor the sum of the following:
   1. The amount of the Contract Sum allocable to the portion of the Work properly performed by Contractor as of the date of termination, less sums previously paid to Contractor.
   2. Previously unpaid costs of any items delivered to the Project site which were fabricated for subsequent incorporation in the Work.
   3. Any proven losses with respect to materials and equipment directly resulting from such termination.
   4. Reasonable demobilization costs.

g) The above payment shall be the sole and exclusive remedy to which Contractor is entitled in the event of termination of the Contract by JPA pursuant to this provision; and Contractor will be entitled to no other compensation or damages and expressly waives same.

7. INDEPENDENT CONTRACTOR: It is the express intent of the parties that this contract shall not create an employer-employee relationship. Employees of the Contractor shall not be deemed to be employees of JPA and employees of JPA shall not be deemed to be employees of the Contractor. The Contractor and JPA shall be responsible to their respective employees for all salary and benefits. Neither the Contractor's employees nor JPA's employees shall be entitled to any salary, wages, or benefits from the other party, including but not limited to overtime, vacation, retirement benefits, workers' compensation, sick leave or injury leave. Contractor shall also be responsible for maintaining workers' compensation insurance, unemployment insurance for its employees, and for payment of all federal, state, local and any other payroll taxes with respect to its employees' compensation.

8. FOREIGN ADVERSARY CONTRACTING PROHIBITION ACT CERTIFICATION: In accordance with the Foreign Adversary Contracting Prohibition Act, Neb. Rev. Stat. §73-901 to §73-907, a public entity shall require a company that submits a bid, or proposal, or enters into any contract or contract renewal with

any public entity, to certify that the company is not a scrutinized company and will not subcontract with any scrutinized company for any aspect of performance of the contemplated contract; and that any products or services to be provided do not originate with a scrutinized company. As such the Contractor agrees to do one of the following:

(A) If the Contractor is providing technology related goods or services under the Act, Contractor agrees to complete and sign a Certification Form as provided by the JPA certifying that the Contractor is not a scrutinized company and attach it to the Agreement; or

(B) If the Contractor is not providing technology related goods or services under the Act, Contractor agrees to complete and sign a Certification Form as provided by the JPA certifying that the Contractor is not providing such services and is not subject to the Act; or

(C) If the Contractor is providing technology related goods under the Act, and Contractor is a scrutinized company that qualifies under Neb. Rev. Stat. §73-906(2) as an exception for the provision of manufactured goods only, Contractor agrees to complete and sign a Certification Form as provided by the JPA certifying that the contractor is a scrutinized company that meets the exception provided under the Act.

9. PERIOD OF PERFORMANCE: The work included in this Contract shall begin as soon as possible from date of executed contract. The project completion date shall be no later than July 31, 2026.

10. The Contract Documents comprise the Contract, and consist of the following:

1. Contract Terms
2. Payment Bond
3. Supplier Response
4. Addendum 1: Loft Amendment
5. Specifications
6. Loading Dock Pictures
7. Foreign Adversary Contracting Prohibition Act Certification Form
8. United States Citizenship Attestation Form
9. Employee Classification Act, Executive Order 83319
10. Employee Classification Act Affidavit
11. Certified Statement
12. Insurance Requirements
13. Instructions to Bidders
14. Sales Tax Exemption Forms 13 & 17

* If the project includes paving, water, sewer, sidewalk, lighting or traffic signal work, JPA Standard Specifications for Municipal Construction will apply, which are on file in the office of JPA Clerk. Copies may be obtained at the Office of the City Engineer.

These Contract Agreements, together with the other Contract Documents herein above mentioned, form this Contract, and they are as fully a part of the Contract as if hereto attached or herein repeated.

The Contractor and JPA hereby agree that all the terms and conditions of this Contract shall by these presents be binding upon themselves, and their heirs, administrators, executors, legal and personal representatives, successors, and assigns.

Vendor Signature Page

CONTRACT
New Mezzanine Storage Loft, Pinnacle Bank Arena
Bid No. 25-193
West Haymarket Joint Public Agency
Arrowhead Construction

EXECUTION BY CONTRACTOR

IF A CORPORATION:

Attest:

Krista Burhoop

Secretary Seal

GENERAL NOTARY-State of Nebraska
KRISTA BURHOOP
My Comm. Exp. January 23, 2028

Arrowhead Development LLC DBA Arrowhead Construction
Name of Corporation

1267 280th, Seward NE 68434
Address

By: Thomas Kaytor
Duly Authorized Official

Principal
Legal Title of Official

IF OTHER TYPE OF ORGANIZATION:

Name of Organization

Type of Organization

Address

By: _____
Member

By: _____
Member

IF AN INDIVIDUAL:

Name

Address

Signature

West Haymarket Joint Public Agency Signature Page

CONTRACT
New Mezzanine Storage Loft, Pinnacle Bank Arena
Bid No. 25-193
West Haymarket Joint Public Agency
Arrowhead Construction

EXECUTION BY THE WEST HAYMARKET JOINT PUBLIC AGENCY

West Haymarket Joint Public Agency

_____
Leirion Gaylor Baird, Mayor
Chairperson of the West Haymarket Joint Public Agency
Board of Representatives

Approved Order No._____

dated _____

PAYMENT BOND

Contractor Name: Arrowhead Development, LLC dba **Arrowhead Construction** Address *(principal place of business)*: **1267 280th** **Seward, NE 68434**	**Surety** Name: Gray Casualty & Surety Company Address *(principal place of business)*: PO Box 6202 Metairie, LA 70009-6202
Owner Name: **West Haymarket Joint Public Agency** Mailing address *(principal place of business)*: **555 S. 10th Street** **Lincoln, NE 68508**	**Contract** Description *(name and location)*: **New Mezzanine Storage Loft, Pinnacle Bank Arena, Bid No. 25-193.** Contract Price: **$42,000.00** Effective Date of Contract: **Upon Execution**

Bond

Bond Amount: **$42,000.00**

Date of Bond:

(Date of Bond cannot be earlier than Effective Date of Contract)

Modifications to this Bond form:

☒ None ☐ See Paragraph 18

Surety and Contractor, intending to be legally bound hereby, subject to the terms set forth in this Payment Bond, do each cause this Payment Bond to be duly executed by an authorized officer, agent, or representative.

Contractor as Principal	Surety
Arrowhead Development, LLC dba Arrowhead Construction	Gray Casualty & Surety Company
(Full formal name of Contractor)	*(Full formal name of Surety) (corporate seal)*
By: Thomas Kayton	By: Seth Weedin
(Signature)	*(Signature)(Attach Power of Attorney)*
Name: Thomas Kayton	Name: Seth Weedin
(Printed or typed)	*(Printed or typed)*
Title: Principal	Title: Attorney-In-Fact
Attest: Krista Burhoop	Attest: Ginger Sass
(Signature)	*(Signature)*
Name: Krista Burhoop	Name: Ginger Sass
(Printed or typed)	*(Printed or typed)*
Title: Director	Title: Witness

Notes: (1) Provide supplemental execution by any additional parties, such as joint venturers. (2) Any singular reference to Contractor, Surety, Owner, or other party is considered plural where applicable.

THE GRAY INSURANCE COMPANY
THE GRAY CASUALTY & SURETY COMPANY

GENERAL POWER OF ATTORNEY

Bond Number: GSA04600075 **Principal:** Arrowhead Development, LLC dba Arrowhead Construction

Project: New Mezzanine Storage Loft, Pinnacle Bank Arena, Bid No. 25-193

KNOW ALL BY THESE PRESENTS, THAT The Gray Insurance Company and The Gray Casualty & Surety Company, corporations duly organized and existing under the laws of Louisiana, and having their principal offices in Metairie, Louisiana, do hereby make, constitute, and appoint: **Seth Weedin, James M. King, Thomas L. King, and Jacob Buss of Lincoln, Nebraska jointly and severally** on behalf of each of the Companies named above its true and lawful Attorney(s)-in-Fact, to make, execute, seal and deliver, for and on its behalf and as its deed, bonds, or other writings obligatory in the nature of a bond, as surety, contracts of suretyship as are or may be required or permitted by law, regulation, contract or otherwise, provided that no bond or undertaking or contract of suretyship executed under this authority shall exceed the amount of $25,000,000.00.

This Power of Attorney is granted and is signed by facsimile under and by the authority of the following Resolutions adopted by the Boards of Directors of both The Gray Insurance Company and The Gray Casualty & Surety Company at meetings duly called and held on the 26th day of June, 2003.

"RESOLVED, that the President, Executive Vice President, any Vice President, or the Secretary be and each or any of them hereby is authorized to execute a power of Attorney qualifying the attorney named in the given Power of Attorney to execute on behalf of the Company bonds, undertakings, and all contracts of surety, and that each or any of them is hereby authorized to attest to the execution of such Power of Attorney, and to attach the seal of the Company; and it is

FURTHER RESOLVED, that the signature of such officers and the seal of the Company may be affixed to any such Power of Attorney or to any certificate relating thereto by facsimile, and any such Power of Attorney or certificate bearing such facsimile signature or facsimile seal shall be binding upon the Company now and in the future when so affixed with regard to any bond, undertaking or contract of surety to which it is attached.

IN WITNESS WHEREOF, The Gray Insurance Company and The Gray Casualty & Surety Company have caused their official seals to be hereinto affixed, and these presents to be signed by their authorized officers this 4th day of November, 2022.

THE GRAY INSURANCE COMPANY SEAL

By: Michael T. Gray
Michael T. Gray
President
The Gray Insurance Company

Cullen S. Piske
President
The Gray Casualty & Surety Company

THE GRAY CASUALTY & SURETY COMPANY SEAL

State of Louisiana
ss:
Parish of Jefferson

On this 4th day of November, 2022, before me, a Notary Public, personally appeared Michael T. Gray, President of The Gray Insurance Company, and Cullen S. Piske, President of The Gray Casualty & Surety Company, personally known to me, being duly sworn, acknowledged that they signed the above Power of Attorney and affixed the seals of the companies as officers of, and acknowledged said instrument to be the voluntary act and deed, of their companies.

Leigh Anne Henican
Notary Public
Notary ID No. 92653
Orleans Parish, Louisiana

Leigh Anne Henican
Notary Public, Parish of Orleans State of Louisiana
My Commission is for Life

I, Mark S. Manguno, Secretary of The Gray Insurance Company, do hereby certify that the above and forgoing is a true and correct copy of a Power of Attorney given by the companies, which is still in full force and effect. IN WITNESS WHEREOF, I have set my hand and affixed the seals of the Company this day of , 2026 .

I, Leigh Anne Henican, Secretary of The Gray Casualty & Surety Company , do hereby certify that the above and forgoing is a true and correct copy of a Power of Attorney given by the companies, which is still in full force and effect. IN WITNESS WHEREOF, I have set my hand and affixed the seals of the Company this day of , 2026 .

THE GRAY INSURANCE COMPANY SEAL

THE GRAY CASUALTY & SURETY COMPANY SEAL

Certified Statement Pursuant to Neb. Rev. Stat. 77-1323

Neb. Rev. Stat 77-1323 *Every person, partnership, limited liability company, association, or corporation furnishing labor or material in the repair, alteration, improvement, erection, or construction of any public improvement shall furnish a certified statement to be attached to the contract that all equipment to be used on the project, except that acquired since the assessment date, has been assessed for taxation for the current year, giving the county where assessed.*

Pursuant to Neb. Rev. Stat. 77-1323, I, G Acc, do hereby certify that all equipment to be used on Bid No. 25-193, except that equipment acquired since the assessment date, has been assessed for taxation for the current year, in _____ County, Nebraska.

DATED this 24 day of Feb., 2026.

By: Curtis Acc

Title: VP

25-193 Addendum 4
Arrowhead Construction
Supplier Response

Event Information

Number: 25-193 Addendum 4
Title: New Mezzanine Storage Loft, Pinnacle Bank Arena
Type: Notice to Bidders
Issue Date: 10/24/2025
Deadline: 11/14/2025 02:00 PM (CT)
Notes: A performance bond is not required, I am sorry. WE NEED A PAYMENT BOND!

The bid has been extended and will now close on Friday, November 14, 2025, at 2:00 p.m.

Contact Information

Contact: Sharon Mulder, Asst. Purchasing Agent
Address: Purchasing
440 S. 8th Street
Suite 200
Lincoln, NE 68508
Phone: (402) 441 x7428
Email: smulder@lincoln.ne.gov

Arrowhead Construction Information

Contact: Curtis Adkins Adkins
Address: 1267 280th
Seward, NE, NE 68434
Phone: (402) 580-3397
Email: curtis@arrowhead-construction.com

By submitting your response, you certify that you are authorized to represent and bind your company.

Brad Peters
Signature

brad@arrowhead-construction.com
Email

Submitted at 11/14/2025 12:53:15 PM (CT)

Requested Attachments

Foreign Adversary Contracting Prohibition Act Form

Foreign Adversary Contracting Prohibition Act Certification Form_Arrowhead.pdf

Complete and upload the certification form in the Attachments tab in Ebid.

Drawings per specifications in Section 1.1.1

170421 A_merged.pdf

1.1.1 Design mezzanine storage loft and provide drawing for that space that was shown on last page of specifications with your bid. Per this specification, I have included my drawing in the bid attachment.

Bid Attributes

1	**Agreement to Addendum No. 3** *Addenda are instruments issued by the Purchasing Department prior to the date for receipt of offers which will modify or interpret the specification document by addition, deletion, clarification or correction. Vendor must acknowledge receipt of this addendum in the space provided at time of bid submission.* *Be advised of the following clarifications and changes to the Specification and bidding documents:* **1. No Bid Bond, No Performance Bond is required.** **2. A payment bond however is required.** **3. Bid will close on Friday, November 14th at 2:00 p.m.** All other terms, conditions, and requirements of the request remain the same as originally indicated in the document or as modified on previous addenda. ☑ Yes

2 **Agreement to Addendum No. 2**

Addenda are instruments issued by the Purchasing Department prior to the date for receipt of offers which will modify or interpret the specification document by addition, deletion, clarification or correction. Vendor must acknowledge receipt of this addendum in the space provided at time of bid submission.

Be advised of the following clarifications and changes to the Specification and bidding documents:

1. Are bid bonds and performance bonds required? No bid bond is required; however, a performance is now required for 100% of your bid.

2. This bid will now close on Wednesday, November 12, 2025, at 2:00 p.m.

All other terms, conditions, and requirements of the request remain the same as originally indicated in the document or as modified on previous addenda.

☑ Yes

3 **Agreement to Addendum No. 1**

Addenda are instruments issued by the Purchasing Department prior to the date for receipt of offers which will modify or interpret the specification document by addition, deletion, clarification or correction. Vendor must acknowledge receipt of this addendum in the space provided at time of bid submission.

Be advised of the following clarifications and changes to the Specification and bidding documents:

1. Attached two pictures for Mezzanine location inside the loading dock.

2. Setting up a pre-bid for Monday, November 3, 2025, at 2:00 p.m. Please check Activity Tab for more information. Note, this pre-bid is not mandatory.

All other terms, conditions, and requirements of the request remain the same as originally indicated in the document or as modified on previous addenda.

☑ Yes

4 **Instructions to Bidders**

I acknowledge reading and understanding the Instructions to Bidders.

☑ Yes

5 **Insurance Requirements and Endorsements**

Contractor agrees to provide required insurance coverage and comply with each provision listed in the **Insurance Requirements** attached in EBid. Submission of the **Certificate of Insurance** and the applicable **endorsements**. **Bidders are strongly encouraged to send the insurance requirements and endorsement information to their insurance agent prior to bid closing in order to expedite the contract execution process.**

☑ Yes

6 **Specifications**

I acknowledge reading and understanding the specifications.

☑ Yes

7 **Drawings**

I acknowledge reading and understanding the Project Drawings.

☑ Yes

8	**Draft Sample Contract** I acknowledge reading and understanding the draft sample contract. ☑ Yes
9	**Contract Contact** The Purchasing Department issues Contracts via email to a designated contact person of the awarded Bidder. This designee should be the primary contact with the department through the delivery of the product/services. Please list the name, email address and phone number of the person who will be the contact person for the contract to be awarded. Brad Peters, brad@arrowhead-construction.com, 402-889-6967
10	**Assignment** Vendor shall not assign, transfer, convey, sublet, or otherwise dispose of any award or any or all of its rights, title, or interest therein, or delegate the duties hereunder without the prior written consent of the City. ☑ Yes
11	**Standard Specifications for Municipal Construction** I acknowledge reading and understanding the current City of Lincoln Standard Specifications for Municipal Construction and Lincoln Standard Plans (including General Provisions and Requirements, and Material and Construction Specifications) View at: lincoln.ne.gov | Standard Specifications for Municipal Construction ☑ Yes
12	**City = JPA** I acknowledge that wherever the City of Lincoln is referenced in this bid, it shall mean the West Haymarket Joint Public Agency (JPA). ☑ Yes
13	**Employee Class Act Affidavit** I acknowledge reading and understanding the Employee Classification Act, Executive Order 83319. If awarded the contract, I will abide by the law, notarize and attach the Employee Classification Act Affidavit to the contract. ☑ Yes
14	**Bid Documents** I acknowledge and accept that it is my responsibility as a Bidder to promptly notify the Purchasing Department Staff prior to the close of the bid of any ambiguity, inconsistency or error which I may discover upon examination of the bid documents including, but not limited to the Specifications. ☑ Yes
15	**Federal Excise Tax Exemption Certificate** I acknowledge that vehicle/s being purchased from this bid for the City of Lincoln or Lancaster County is for exclusive use by that governmental entity. The City of Lincoln and Lancaster County are exempt from Federal Excise Tax or any other taxes for the purchase of equipment specified in this bid/quote. A “Federal Excise Tax Exemption Certificate For State and Local Governments” is available upon request if applicable. A Form 13 will also be supplied with the Purchase Order to be issued. NOTE: Tax exemptions are not applicable for equipment purchased for use by the Lincoln Water Department. ☑ Yes

16	**U.S. Citizenship Attestation** **Is your company legally considered an Individual or Sole Proprietor: YES or NO** As a Vendor who is legally considered an Individual or a Sole Proprietor I hereby understand and agree to comply with the requirements of the United States Citizenship Attestation Form, available at: http://www.sos.ne.gov/business/notary/citizenforminfo.html All awarded Vendors who are legally considered an Individual or a Sole Proprietor must complete the form and submit it with contract documents at time of execution. If a Vendor indicates on such attestation form that he or she is a qualified alien, the Vendor agrees to provide the US Citizenship and Immigration Services documentation required to verify the Vendor's lawful presence in the United States using the Systematic Alien Verification for Entitlements (SAVE) Program. Vendor further understands and agrees that lawful presence in the United States is required and the Vendor may be disqualified or the Contract terminated if such lawful presence cannot be verified as required by Neb. Rev. Stat. 4-108. Yes
17	**Tax Exempt Certification Forms** Materials being purchased in this bid are tax exempt and unit prices are reflected as such. A Purchasing Agent Appointment form and an Exempt Sales Certificate form shall be issued with contract documents. (Note: State Tax Law does not provide for sales tax exemption for proprietary functions for government, thereby excluding the purchases of pipes to be installed in water lines and purchase of water meters.) ☑ Yes
18	***Attribute deleted as part of an Addendum***
19	**Payment Bonds** I acknowledge that a Payment Bond each in the amount of 100% of the Contract amount will be required with the signed contract upon award of this project. ☑ Yes

Bid Lines

1	New Mezzanine/Storage Loft Installed/Completed Per the specifications Quantity: 1 UOM: Lump Sum Unit Price: $42,000.00 Total: $42,000.00

Response Total: $42,000.00

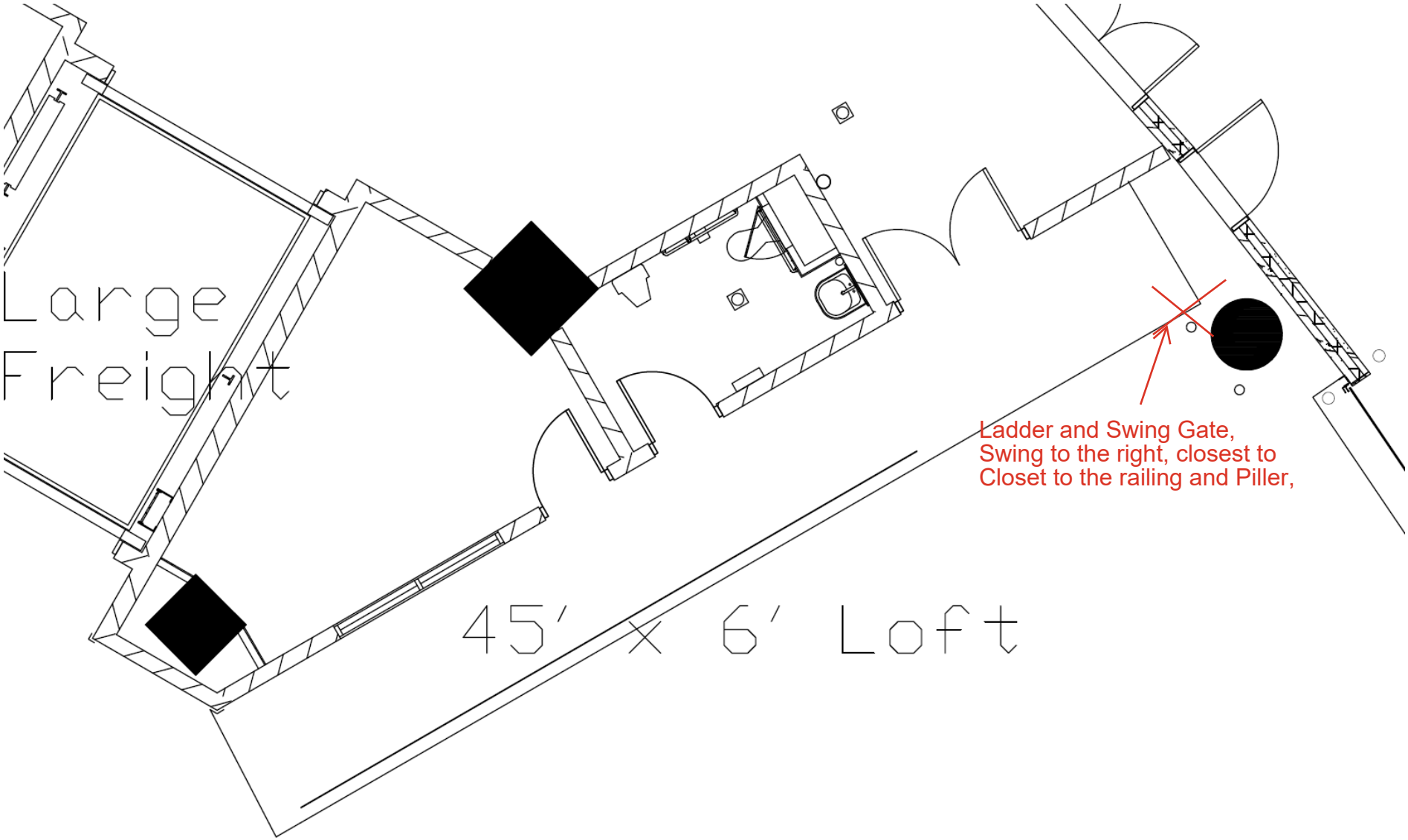
Large
Freight
45' X 6' Loft
Ladder and Swing Gate,
Swing to the right, closest to
Closet to the railing and Piller,

New Mezzanine Storage for
Pinnacle Bank Arena

1. GENERAL NOTICE

1.1 The City of Lincoln, hereinafter referred to as Owners, are requesting bids from qualified companies, hereinafter referred to as Vendor(s); new storage loft Pinnacle Bank Arena requires the following:

1.1.1 Design mezzanine storage loft and provide drawing for that space that was shown on last page of specifications with your bid.

1.1.2 Furnish and install storage mezzanine on the loading dock

1.1.3 Submit all building permits required per City of Lincoln

1.2 Contract will be awarded to the lowest, responsible, responsive Vendor whose bid substantially meets all the requirements, is the most advantageous to the City, and as the City deems will best serve the interests of the City.

1.3 Vendor shall submit bid, and all requested supporting documents via the City/County ebid system

1.3.1 To submit a bid, Vendor must be registered with the City of Lincoln/Lancaster County Purchasing Division.

1.3.2 To register, go to the City of Lincoln website at www.lincoln.ne.gov

- Type “bid” into search box
- CLICK ON ***Bids and Contracts***
- CLICK ON ***Supplier Registration***
- Enter information as required.

1.3.3 All fields marked with the red asterisk must be completed to register successfully.

1.4 Any deviation from these specifications or other documents associated with the bid must be documented on company letterhead and submitted prior to bid close.

1.5 All inquiries regarding these specifications shall be submitted in writing to Sharon Mulder, Assistant Purchasing Agent via email to (smulder@lincoln.ne.gov)

1.5.1 These inquiries and/or responses shall be distributed to prospective bidders electronically as an addendum.

1.5.2 No direct contact is allowed between Vendor and other City staff throughout the bid process.

1.5.3 Failure to comply with this directive may result in Vendor's bid being rejected.

1.6 Work may be performed at the jobsite during operating hours which are from 8am – 5pm, Monday – Friday.

1.6.1 Work outside of these days and times shall be subject to approval of the Owner depending on event schedule.

1.7 The awarded contract is not assignable without the written approval of the Owners in the form of a contract amendment.

1.8 Payment will be made upon completion of installation and approval by the Owner’s Representative.

1.9 The Project Manager for this project will be Ryan Weiss, Director of Operations, Pinnacle Bank Arena.

2. PROJECT SCOPE

2.1 The successful contractor shall furnish and install a mezzanine to the loading dock of Pinnacle Bank Arena.

3. LOADING DOCK MEZZANINE

3.1 Mezzanine Construction
- 3.1.1 Supply and install a new mezzanine structure measuring 40' X 6' feet.
- 3.1.2 Mezzanine frame, decking, and supports as per the approved layout
- 3.1.3 Top of Deck – 10'0", Clear Height 9'-1.75"

3.2 Handrails and Kickplates
- 3.2.1 Install Handrails kickplates along the perimeter of the mezzanine.
- 3.2.2 Removable rails along the front of the mezzanine to help load items up to the loft.
- 3.2.3 Handrail and kickplate configuration:
- 3.2.4 Full Handrail and Kickplate along all open sides.
- 3.2.5 Kickplate along the walls where mezzanine abuts existing walls.

3.3 Access
- 3.3.1 Install a mezzanine access ladder at the specified location to provide safe vertical access to the mezzanine deck.
- 3.3.2 Include a pivot safety gate at the top of the ladder to comply with fall protection requirements.

3.4 Load Capacity
- 3.4.1 Mezzanine shall be designed and constructed for a uniform live load capacity of 125 P.S.F., suitable for temporary storage of arena equipment.

3.5 All upright steel needs to have a 2-hour fire rating per fire marshal.

3.6 The deck height of the platform is at least 10'.

3.7 PBA will subcontract a fire sprinkler company to install all fire sprinklers under the loading dock Mezzanine.

3.8 See drawing exhibits A

3.9 Two scissor lifts and a forklift will be provided to the winning contractor.

3.10 Submit all building permits to the City of Lincoln for the mezzanine project. Cost must be included in the bid.

4. DELIVERY AND INSTALLATION

4.1 Pricing shall include F.O.B delivery:

Pinnacle Bank Arena
400 Pinnacle Arena Drive
Lincoln, NE 68508

4.2 Delivery will be to the loading dock.

4.3 Delivery shall be between the hours of 8:00 am to 4:30 pm Monday through Friday and must work around the event schedule.

4.4 Awarded Vendor must coordinate delivery of equipment with the Owners,providing a twenty-four-hour notice prior to delivery.

4.5 Project shall be completed by May 1, 2026, unless otherwise discussed between awarded contractor and owner due to scheduling conflicts of arena.

5. EVALUATION CRITERIA

5.1 Evaluation of bids will consist of the following:

5.1.1 Contract will be awarded to the lowest, responsible, responsive vendor whose bid substantially meets all the required specifications, duties, terms, and conditions as defined in this request.

5.2 Vendor will be given an approved contract after the WHJPA board meets in December 2025.

EXIBIT A – TOP VEIW OF MEZZANINE

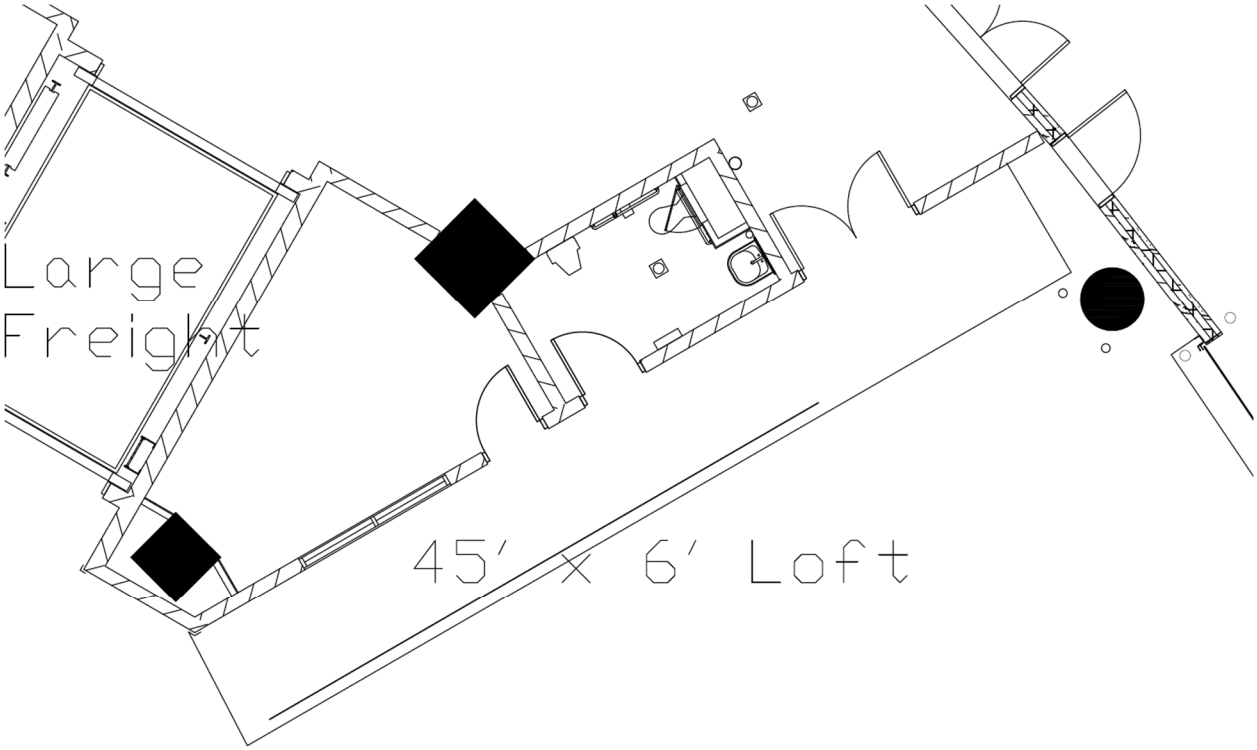




EXIT

SUMMARY OF FOREIGN ADVERSARY CONTRACTING PROHIBITION ACT
LB 1300, NEBRASKA LEGISLATURE (2024), Neb. Rev. Stat. §73-901 to §73-907

Legislative Intent:
The Foreign Adversary Contracting Prohibition Act was passed and signed by the Governor on April 16, 2024, pursuant to LB 1300, with an emergency clause attached for certain sections including sections 7-13 for the Foreign Adversary Contracting Prohibition Act. It is codified under Neb. Rev. Stat. §73-901 to §73-907.

Purpose: The Legislature finds that dealing with commercial entities organized under the laws of a foreign adversary or with a principal place of business within a foreign adversary tend to carry increased political risk and threaten state security and the privacy of residents. In response to the risk, the Act prohibits public entities, including a political subdivision and any entity acting on behalf of the political subdivision, from entering into contracts with companies organized under the laws of or controlled by the government of a foreign adversary for technology related products or services for performance of the contract. The Act requires the political subdivision to obtain a certification from any company providing technology related products or services to certify they are not a scrutinized company, organized under the laws of, or controlled by a foreign adversary.

Under the bill, a scrutinized company shall not bid on, submit a proposal for, or enter into, directly or indirectly through a third party, any contract or contract renewal with any public entity for any technology-related public product or service, (See Neb. Rev. Stat. §73-904). No public entity shall enter into any contract or renewal that results in state or local government funds being transferred to a scrutinized company in connection with any technology related product or service in performance of the contract or to any company in connection with any technology related product or service that originates with a scrutinized company. (See Neb. Rev. Stat. §73-906).

Certification – Not a Scrutinized Company
A public entity shall require a company that submits a bid or proposal or enters into a contract or renewal for any technology related product or service to certify that the company is not a scrutinized company and that the company will not subcontract with any scrutinized company for any aspect of performance of the contemplated contract and that any products or services to be provided do not originate with a scrutinized company. (See Neb. Rev. Stat. §73-905).

Definitions- Neb. Rev. Stat. §73-903
Under the Act, the following terms have the following meanings:

Company means: any sole proprietorship, organization, association, corporation, partnership, joint venture, limited partnership, limited liability partnership, limited liability company, or other entity or business association that exists for the purpose of making a profit, including all wholly owned subsidiaries, majority owned subsidiaries, parent companies, or affiliates of any such entity or business association.

Foreign adversary means: a foreign adversary as determined pursuant to 15 CFR 7.4. Per 15 CFR 7.4 foreign adversaries include the People's Republic of China, including the Hong Kong Special Administrative Region (China); Cuba, Iran, North Korea, Russia, and Maduro Regime.

Owned in whole or in part means: (a) For a publicly traded company, any share of ownership that entails the ability to direct or influence the operations of the company, the ability to appoint or discharge any board members, officers, or directors, or any other rights beyond those available to a retail investor holding an equivalent share of ownership; and (b) For a privately held company, any share of ownership.

Public entity means: the state or any department, agency, commission, or other body of state government, including publicly funded institutions of higher education**,** any political subdivision of the state, and any other public or private agency, person, partnership, corporation, or business entity acting on behalf of any such public entity.

Scrutinized company means:
(a) Any company organized under the laws of a foreign adversary or having its principal place of business within a foreign adversary, and any subsidiary of any such company; or
(b) Any company owned in whole or in part or operated by the government of a foreign adversary, an entity controlled by the government of a foreign adversary, or any subsidiary or parent of any such company; or

(c) Any company that sells to a public entity a final technology-related product or service that originates with a company described in (a) or (b) above, without incorporating that product or service into another final product or service.

Technology-related product or service means: a product or service used for information systems, surveillance, light detection and ranging, or communications. Although there are no definitions provided in the legislation, the city offers the following examples to aid companies as they prepare and submit the certification:

a. For information systems, this would include technology related products and services used by an organization to collect, transfer, organize, and store city information or that works together to transform data into useful information. Such products or services could include a collection of hardware, software, data centers, servers, the internet, and other hardware devices.

b. For surveillance, this would include products and services used to monitor an individual's digital and physical actions and communications. This could include facial recognitions software, security cameras, and wearable computing devices,

c. For light detection and ranging, this would include products and services that utilize Lidar technology to measure large areas of terrain through 3D models.

d. For communications, this would include products and services for the acquisition, storage, management, transmission, or reception of data or information by the City and could include equipment such as computers, cell phones, telephones, video conferencing equipment, satellite, fiber optics, radio, or any other electronic device enabling the transfer of text, audio, or video content.

EXCEPTION FOR GOODS: A public entity may enter into a contract with a scrutinized company for goods manufactured by a scrutinized company if: there is no other reasonable option for procuring such good and the contract is preapproved by the Nebraska Department of Administrative Services and not procuring such good would pose a greater threat to the state than the threat associated with the good itself OR if the purchasing entity is an electric supplier that is not out of compliance with the Critical Infrastructure Protection requirements issued by the North American Electric Reliability Corporation. (See Neb. Rev. Stat. §73-906(2)).

NULL AND VOID: Any contract entered into in violation of the Act shall be null and void. (See Neb. Rev. Stat. §73-907(1)).

PENALTY: Any scrutinized company that bids on or contracts or renews a contract for any technology related product or service or that violates the certification provided pursuant to the Act shall be liable for a civil penalty up to $250,000 or twice the amount of the contract bid, or the amount of any losses suffered by the public entity as a result of such violation, whichever amount is higher. The contractor shall also be ineligible to enter into any contract with any public entity for a period of five years. The Attorney General may bring an action in any court of competent jurisdiction against any person that violates the Act. (See Neb. Rev. Stat. §73-907(2-3)).

NOTICE OF VIOLATION: If a public entity believes that a company has violated the certification process, they shall give the company notice of the alleged violation with 60 days to respond. After responding, the public entity has 60 days to make a final determination and if a violation has occurred may refer the matter to the Attorney General. A whistleblower provision allows any individual to report suspected violations to the Attorney General. (See Neb. Rev. Stat. §73-907(4-5)).

PROCESS: All bid proposals, contracts, and contract renewals need to have a **Certification Form** submitted by the contractor and attached to the contract and the Foreign Adversary Contracting Prohibition Act Certification contract clause should be included in all contracts and renewals. If the contractor indicates on the form they are not supplying technology related goods or services, the contractor will not need to resubmit another certification form for any subsequent renewals.

FOREIGN ADVERSARY CONTRACTING PROHIBITION ACT
CERTIFICATION FORM FOR
TECHNOLOGY RELATED PRODUCT OR SERVICES

For the purposes of complying with the Foreign Adversary Contracting Prohibition Act ("the Act"), Neb. Rev. Stat. §73-901 to §73-907, I attest and certify as follows:

Name of Company Arrowhead Construction

Check all that apply:

☑ I am authorized to attest and certify as the owner of the Company, in whole or in part, or as an authorized representative of the Company, to make the certifications required herein.

☐ The Company is providing technology related products and/or services to the public entity and is not a scrutinized company as defined in the Act; it is not subcontracting with a scrutinized company under the Act; and the technology related products and/or services provided herein do not originate with a scrutinized company under the Act.

☑ The Company is not providing technology related goods or services as defined under the Act.

☐ The Company is a scrutinized company and has entered into an Agreement or an Agreement Renewal with the public entity to provide a technology related good manufactured by a scrutinized company that meets the exception for the provision of a technology related good by a scrutinized company.

☑ I hereby attest and certify on behalf of the Company that the responses and information provided on this form are true, complete, and accurate. The Company understands that any scrutinized company that violates this Act or that violates the certification may be subject to action by the Nebraska Attorney General, civil penalty, and that such violation may void the contract.

PRINT NAME: Curtis Emil Kelly
(First, Middle, Last)

SIGNATURE: 

TITLE: VP

DATE: 2/25/24

smart # 10070200
7-26-10/law/tb

CITY OF LINCOLN
MAYOR CHRIS BEUTLER

CITY OF LINCOLN
EXECUTIVE ORDER

NO. 083319

WHEREAS, there is concern over the inappropriate competitive advantages in the public bidding process for local publicly funded construction and delivery service contracts resulting from the misclassification of individuals performing construction labor services as "independent contractors" rather than "employees"; such "independent contractors" are commonly referred to as "1099 workers" due to the IRS form they receive rather than a W-4 which an employee receives;

WHEREAS, this misclassification of such individuals as "independent contractors" rather than as "employees" eliminates any obligation to pay these individuals legally required minimum or overtime wages, to provide legally required workers' compensation insurance, to make unemployment insurance payments, to pay legally required employment and payroll taxes, and to provide any other health, pension, or benefit such individuals would typically receive if properly classified as employees;

WHEREAS, this misclassification of individuals performing construction labor services for the contractor as "independent contractors" rather than "employees" is a violation of federal and state law, but is difficult to enforce once public construction or delivery service contracts have been bid, awarded, and entered into;

WHEREAS, the use of public funds to compensate contractors who unlawfully avoid their obligation to pay legally required minimum or overtime wages, to provide legally required workers' compensation insurance, to make unemployment insurance payments, to pay legally required employment and payroll taxes, and to provide any other health, pension, or benefit is not in the public interest; and

WHEREAS, the Employee Classification Act, Neb. Rev. Stat. §§ 48-2901 to 48-2912 (effective July 15, 2010) provides that any contract entered into between a political subdivision and a contractor shall require that each contractor who performs construction or delivery service pursuant to the contract submit to the political subdivision an affidavit attesting that (1) each individual performing services for such contractor is properly classified under the Employee Classification Act, (2) such contractor has completed a federal I-9 immigration form and has such form on file for each employee performing services, (3) such contractor has complied with Neb. Rev. Stat. § 4-114 requirements that the contractor register and use a federal immigration employment verification system to determine the work eligibility status of new employees physically performing services in the State of Nebraska, (4) such contractor has no reasonable basis to believe that any individual performing services for such contractor is an undocumented worker, and (5) as of the time of the contract, such contractor is not barred from contracting with the state or any political subdivision pursuant to § 48-2912 of the Employee Classification Act.

NOW, THEREFORE, BY VIRTUE OF THE AUTHORITY VESTED IN ME by the Charter of the City of Lincoln, I hereby establish the following policy as to the bid and award of contracts to contractors for construction and delivery services with the City of Lincoln:

The Purchasing Agent shall immediately include in the City of Lincoln's notice to bidders for construction contracts that all contractors submitting bids in response to the notice shall affirmatively certify to the Purchasing Agent that all individuals hired to perform construction or delivery labor services for the contractor under the contract shall be properly classified as employees and not as independent contractors if the individual does not meet the requirements of an independent contractor under federal and state law (including the requirements of the State of Nebraska Employee Classification Act), and that the contractor will comply with all legal obligations with respect to these employees (including, but not limited to, minimum and overtime pay, workers' compensation, unemployment compensation, and payment of federal and state payroll taxes). The

notice to bidders shall further provide that contractors may use affidavits required pursuant to the Employee Classification Act for this purpose, but that a failure to make the affirmative certification to the Purchasing Agent shall render the bidder ineligible for award of the contract.

The Purchasing Agent shall immediately include the following provisions in contracts for construction or delivery services:

(1) Contractor agrees that each individual performing services for the contractor shall be properly classified as an employee and not as an independent contractor if the individual does not meet the requirements of an independent contractor under the State of Nebraska's Employee Classification Act and that contractor shall comply with all legal obligations with respect to the employee (including, but not limited to, minimum and overtime pay, workers' compensation, unemployment compensation, and payment of federal and state payroll taxes).

(2) Contractor understands and agrees that failure to classify each individual hired to perform services under the contract as an employee rather than as an independent contractor if the individual does not meet the requirements of an independent contractor under the State of Nebraska's Employee Classification Act and/or failure to comply with legal obligations with respect to the employee (including, but not limited to, minimum and overtime pay, workers' compensation, unemployment compensation, and payment of federal and state payroll taxes) shall be considered a breach of the contract and is a grounds for rescission of the contract by the City.

(3) Contractor additionally agrees to include the following provisions in each subcontract entered into with a subcontractor as part of the contractor's contract with the City:

(a) Subcontractor agrees that each individual performing services for the subcontractor shall be properly classified as an employee and not as an independent contractor if the individual does not meet the requirements of an independent contractor under the State of Nebraska's Employee Classification Act and that subcontractor shall comply with all legal obligations with respect to the employee (including, but not limited to, minimum and overtime pay,

workers' compensation, unemployment compensation, and payment of federal and state payroll taxes).

(b) Subcontractor understands and agrees that subcontractor's failure to properly classify individuals hired to perform services under the subcontract as employees and not as independent contractors if the individual does not meet the requirements of an independent contractor under the State of Nebraska's Employee Classification Act and/or failure to comply with legal obligations with respect to the employee (including, but not limited to, minimum and overtime pay, workers' compensation, unemployment compensation, and payment of federal and state payroll taxes) shall be considered a breach of the contract and is a grounds for rescission of the subcontract by the contractor.

(4) Contractor agrees that if subcontractor fails to or is suspected of failing to properly classify each individual hired pursuant to the subcontract as an employee and not as an independent contractor if the individual does not meet the requirements of an independent contractor under the State of Nebraska's Employee Classification Act and/or fails to comply with legal obligations with respect to the subcontractor's employee, the contractor shall take appropriate corrective action including, but not limited to, reporting the suspected violation of the State of Nebraska Employee Classification Act to the Nebraska Department of Labor or rescission of the subcontract by the contractor. Written notification of the corrective action shall be submitted to the City of Lincoln Purchasing Department. Contractor understands and agrees that contractor's failure to take appropriate corrective action shall be considered a breach of the contractor's contract with the City of Lincoln and is a grounds for rescission of the contract by the City.

(5) The City of Lincoln shall notify the Nebraska Department of Labor of any contractor or subcontractor it has determined is in breach of contract due to the terms of this order.

(6) Any contractor or subcontractor who shall have been determined by the Nebraska Department of Labor to have knowingly provided a false affidavit to the City of Lincoln

under the State of Nebraska's Employee Classification Act shall be referred to the Purchasing Agent of the City who shall determine whether to declare such contractor or subcontractor an irresponsible bidder who shall be disqualified from receiving any business from the municipality for a stated period of time, in accordance with Lincoln Municipal Code § 2.18.030(n)(1) or (2).

(7) This policy does not prohibit a contractor or subcontractor from hiring individuals to perform construction labor services as independent contractors, provided that the contractor's or subcontractor's use of such individuals as an independent contractor complies with the criteria found in subdivision 5 of Neb. Rev. Stat. § 48-604 and is otherwise valid under federal and state law and is not intended to circumvent lawful obligations under federal and state law or city contractual requirements.

The City Clerk is directed to send a copy of this Executive Order to Vince Mejer, City Purchasing Agent, for his record.

Dated this 28 day of July, 2010.

Chris Beutler, Mayor of Lincoln

Approved as to Form & Legality:

City Attorney

EMPLOYEE CLASSIFICATION ACT AFFIDAVIT

For the purposes of complying with THE NEBRASKA EMPLOYEE CLASSIFICATION ACT, I, Amanda, herein below known as the Contractor, state under oath and swear as follows:

1. Each individual performing services for the Contractor is properly classified under the Employee Classification Act.

2.The Contractor has completed a federal I-9 immigration form and has such form on file for each employee performing services.

3. The Contractor has complied with Neb Rev Stat 4-114.

4. The Contractor has no reasonable basis to believe that any individual performing services for the Contractor is an undocumented worker.

5. The Contractor is not barred from contracting with the state or any political subdivision pursuant to section 12 of this Act.

6. As the Contractor I understand that pursuant to the Employee Classification Act a violation of the Act by a contractor is grounds for rescission of the contract by the City. I understand that pursuant to the Act any contractor who knowingly provides a false affidavit may be subject to criminal penalties and upon a second or subsequent violation shall be barred from contracting with the City for a period of three years after the date of discovery of the falsehood.

I hereby affirm and swear that the statements and information provided on this affidavit are true, complete and accurate. The undersigned person does hereby agree and represent that he or she is legally capable to sign this affidavit and to lawfully bind the Contractor to this affidavit.

PRINT NAME: Cathy Fell
(First, Middle, Last)

SIGNATURE: _____

TITLE: _____

State of Nebraska)
) ss.
County of Seward)

GENERAL NOTARY-State of Nebraska
KRISTA BURHOOP
My Comm. Exp. January 23, 2028

This affidavit was signed and sworn to before me, the undersigned Notary Public, on this 25th day of February, 2026

Notary Public

Insurance Requirements

Submitted on	15 October 2025, 1:08PM
Receipt number	2234
Related form version	18

The requirements herein apply to contracts to be issued by the City of Lincoln, Lancaster County, the Lincoln-Lancaster County Public Building Commission, and the West Haymarket Joint Public Agency. For purposes of certificates, endorsements and other proof required herein, only include the entity issuing the contract.

DEFINITIONS: For purposes of these Requirements, the following definitions apply:

- "**Agreement**" shall mean the contract between the Owner and the Contractor into which these Insurance Requirements are incorporated by reference.
- "**City**" shall mean the City of Lincoln, NE.
- "**COI**" shall mean a Certificate of Insurance.
- "**Contractor**" shall mean the individual, company, etc. being hired to perform the Work under the Agreement. Contractor shall include all owners, officers, employees, agents, and subcontractors and employees of any of them.
- "**County**" shall mean the County of Lancaster, Nebraska.
- "**Owner(s)**" shall mean any, all, or a combination of the City of Lincoln, NE, County of Lancaster, Nebraska, Lincoln-Lancaster County Public Building Commission, and/or the West Haymarket Joint Public Agency and their elected and appointed officials, officers, employees, agents, contractors, and consultants.
- "**PBC**" shall mean the Lincoln-Lancaster County Public Building Commission.
- "**Site**" shall mean the location the Work is being completed and/or delivered to.
- "**WHJPA**" shall mean the West Haymarket Joint Public Agency.
- "**Work**" shall mean the project being completed, products being delivered, and/or services being provided as contemplated in the Agreement.

OWNERS: The Insurance Requirements apply to the following:	WHJPA
PROVISIONS:	3. Commercial General Liability 3.1. Construction Agreements 4. Automobile Liability 5. Workers' Compensation 9. Builder's Risk Insurance

Contractor shall comply with the following provisions:

1. Insurance; Coverage Information

- A. The Contractor shall, prior to beginning work, satisfy all provisions of these Insurance Requirements and shall provide proof of insurance coverage in a form satisfactory to the Owner, which shall not unreasonably withhold approval. Contractor shall comply with these Insurance Requirements, including maintaining all coverages required by these Insurance Requirements, at all times the Work is being done pursuant to the Agreement.
- B. Contractor's insurance shall be primary and non-contributory with any insurance coverage maintained by the Owner. Owner's insurance policies, if any, operate secondary, in excess, separately and independently from policies required to be provided by Contractor. The policies shall be written for not less than the limits of liability required herein. If Contractor maintains higher limits than the minimums shown, the Owner requires and shall be entitled to the higher limits. Any available insurance proceeds in excess of the specified minimum limits of insurance and coverage shall be available to the Owner.

Deductibles/Retentions: Deductibles/Retentions above $25,000.00 shall not be permitted unless written consent is given by the Owner prior to close of an RFP or bid, or upon execution of the Agreement if a formal bid or RFP is not issued.
Owner has sole and exclusive discretion to reject deductibles/retentions that do not meet Owner's satisfaction.
Self-Insurance: In the event Contractor is self-insured for any insurance coverages required in this Agreement, Contractor is required to

complete a Self-Insured Certification. If Contractor is self-insured for Workers Compensation, Contractor shall provide Owner a copy of Nebraska Certificate of Self-Insurance for Workers' Compensation.

Owner(s) checked below shall be listed as the Certificate Holder on the COI using the following address: 555 S. 10th St., Lincoln, NE 68508

West Haymarket Joint Public Agency

---

2. Certificates

- A. The Contractor shall provide to Owner, in a form acceptable to Owner, a COI demonstrating the coverage required herein and include copies of all necessary endorsements, waivers, or other documents required by these Insurance Requirements before being permitted to begin the Work pursuant to this Agreement.

---

3. Commercial General Liability: The Contractor shall have, maintain, and provide proof of Commercial General Liability Insurance.

- A. **Basis**: Occurrence basis.
- B. **Limits**: Not less than $1,000,000 combined single limit (CSL) each occurrence; $2,000,000 general aggregate and $2,000,000 products-completed operations aggregate.
- C. **Coverage**: Coverage shall include: Premises-Operations, Products/ Completed Operations, Contractual, Broad Form Property Damage, and Personal and Advertising Injury. The required insurance must include coverage for all projects and operations by or on behalf of Contractor or similar language that meets the approval of the Owner, which approval shall not be unreasonably withheld. Blanket contractual liability coverage, to the extent permitted by law, including but not limited to coverage of Contractor's contractual indemnity obligations in this agreement. Policy shall have a Cross-Liability/Separation of Insureds Clause specifying the insureds' protection under the policy as if each insured had a separate policy, with the exception of the limits of liability and any rights or duties that are designated to be for the first named insured only.
- D. **Additional Insured Endorsement Form**: The Contractor shall name the Owner as additional insured on Contractor's Commercial General Liability policy.
- E. **Waiver of Subrogation/Waiver of Right of Recovery Endorsement Form**: Contractor shall have policy endorsed with a waiver of subrogation/waiver of right of recovery in favor of Owner.

3.1 Construction Agreements: The following shall also apply for Construction and Construction-Related Agreements:

- A. **Basis**: The General Aggregate shall apply on a Per Project basis. The policy aggregate, if applicable, shall not be less than five (5) times the general aggregate.
- B. Products and completed operations coverage shall be maintained for at least four (4) years after the latest of the: a) final payment; b) agreement expiration; c) agreement termination or d) substantial completion. Contractor shall furnish Owner evidence of continuation of such insurance for the four (4) years.
- C. **Additional Insured Endorsement Forms**: Endorsements that include both ongoing operations and products and completed operations coverage through ISO Endorsements CG 20 10 10 01 and CG 20 37 10 01 (together); or CG 20 10 07 04 and CG 20 37 07 04 (together); or their equivalent. For design professional additional insureds, ISO Endorsement CG 20 32 07 04, "Additional Insured—Engineers, Architects or Surveyors Not Engaged by the Named Insured" or its equivalent.
- D. **Electronic Data**: Policy shall be endorsed to remove the exclusion for damage to electronic data "that does not result from physical injury to tangible property" by adding an Electronic Data Liability endorsement ISO CG 04 37 or its equivalent.

---

4. Automobile Liability: The Contractor shall have, maintain, and provide proof of Automobile Liability insurance.

- A. **Basis**: Occurrence basis.
- B. **Limits**: Not less than $1,000,000 CSL per accident. Auto Liability shall not be subject to an aggregate.
- C. **Coverage**: Coverage shall include liability arising out of the ownership, maintenance, or use of any motor vehicle, including Owned, Leased, Hired and Non-Owned.
- D. **Additional Insured Endorsement Form**: The Contractor shall name the Owners as additional insured on Contractor's Automobile Liability policy.
- E. **Waiver of Subrogation/Waiver of Right of Recovery Endorsement Form**: Contractor shall have policy endorsed with a waiver of subrogation/waiver of right of recovery in favor of Owner.

---

5. Workers' Compensation; Employers' Liability: The Contractor shall have, maintain, and provide proof of Workers' Compensation insurance.

- A. **Limits:** Workers' Compensation coverage not less than statutory requirements under the laws of the State of Nebraska and any other applicable State where Work may be performed. Employer's Liability coverage with limits of not less than $500,000 each accident or injury shall be included.
- B. **Waiver of Subrogation/Waiver of Right of Recovery Endorsement Form:** Contractor shall have policy endorsed with a waiver of subrogation/waiver of right of recovery in favor of Owner. The Contractor shall have its Workers' Compensation insurance carrier, or, if the Contractor is self-insured, then the Contractor itself shall, waive its subrogation rights/rights of recovery against the Owner and shall provide to Owner, in a form acceptable to Owner, a written document, signed by an authorized Officer of the Contractor confirming Contractor has waived their right of subrogation/waived their right of recovery.
- C. Sole proprietors and certain very small entities may be exempt from these requirements and it is the obligation of the Contractor to submit documentation to the Owner of the basis for any such exemption. Contractor will not hire/engage any employees or independent contractors without procuring a Workers Compensation policy and providing proof to the Owner.

9. Builder's Risk Insurance: The Contractor shall have, maintain, and provide proof of Builder's Risk Insurance.

- A. **Limits**: not less than full insurable replacement cost value of the entire Work. Further, Off-Site Storage and Transit limits shall be in amounts not less than amounts required to fully replace the property for any such potential loss in a timely manner. Soft costs, Extra Expense and Building and Ordinance limits shall be sufficient to bear all reasonable costs properly attributable thereto.
- B. **Coverage**: Coverage shall be written on an "all risk" peril basis, insuring against physical loss or damage, including, but not limited to fire, theft, vandalism, malicious mischief, flood and earth movement/earthquake. Contractor's or Subcontractor's tools, materials, equipment, that are not intended to become a part of the Work, will not be insured by this policy. Contractor shall be financially responsible for any deductible applied to loss.
- C. **Additional Insured Endorsement Form**: This insurance shall include the Owner, the Contractor, Subcontractors (all tiers), in the Work as their interests may appear.
- D. **Waiver of Subrogation/Waiver of Right of Recovery Endorsement Form**: Contractor shall have policy endorsed with a waiver of subrogation/waiver of right of recovery in favor of Owner, Contractor and Subcontractors (all tiers).

Subcontractors: The Contractor shall ensure that all tiers of Contractor's subcontractors comply with insurance requirements identical to the Insurance Requirements between the Contractor and Owner. Contractor shall provide, upon Owner's request, all documentation evidencing such compliance, to Owner on behalf of Contractor and Contractor's subcontractors.

Cancellation/Renewal Notice: Contractor's policies must contain a provision or endorsement that the coverage afforded will not be canceled, materially changed, non-renewed or aggregate limits exhausted until at least 30 days prior written notice has been given to Contractor. Within three days of receipt of any such written notice from insurer, Contractor shall provide a copy of the notice to Owner. If coverage required under this Agreement is cancelled or non-renewed, Contractor shall provide evidence of replacement coverage, with no lapse in coverage between the policies. Contractor shall provide, prior to expiration of any policy(ies), certificates of insurance and endorsement forms evidencing renewal insurance coverages as required in this Agreement.

Owner's Option: Owner may purchase and maintain at Owner's expense, liability insurance. Contractor cannot rely upon Owner's liability policy(ies) for any of Contractor's insurance obligations required herein.

Umbrella or Excess Liability: The Contractor may use an Umbrella, Excess Liability, or similar coverage to supplement the primary insurance stated above in order to meet or exceed the minimum coverage levels required by this Agreement provided such umbrella/excess coverage is not more restrictive than the primary coverage. Such coverage shall be excess of the Commercial General Liability, Auto Liability and Employer's Liability. If the Contractor is required to have, maintain and provide proof of Garage Liability, the Umbrella/Excess Liability shall also be excess of Garage Liability.

Minimum Rating - Insurer: All insurance coverage are to be placed with insurers authorized to do business in the State of Nebraska and must be placed with an insurer that has an A.M. Best's Rating of no less than "A-" VIII, unless Owner has expressly approves in writing.

Reservation of Rights: The Owner reserves the right to require a higher limit of insurance or additional coverages when the Owner determines that a higher limit or additional coverage is required to protect the Owner or the interests of the public.

Sovereign Immunity: Nothing contained in this clause or other clauses of this Agreement shall be construed to waive the Sovereign Immunity of the Owner.

No Waiver by Owner: Failure of the Owner to object to the form or content of the certificate or endorsement or to demand such proof as is required herein shall not constitute a waiver of any insurance requirement set forth herein.

Failure of Owner to demand such certificates of insurance, endorsements or other evidence of the Contractor's full compliance with these insurance requirements, or failure of Owner to identify any deficiency in compliance from the evidence provided, shall not be construed as a waiver of the Contractor's obligation to obtain and maintain such insurance at all tiers.

Claims-made Tail Coverage: Any liability insurance arranged on a claims-made basis, will require an Extended Reporting coverage for the duration specified or the maximum time period the Contractor's insurer will provide, if less than the duration specified. Contractor will be responsible for furnishing certification of Extended Reporting coverage as described or continuous "claims made" liability coverage for the additional period. Continuous "claims made" coverage is acceptable in lieu of Extended Reporting coverage, provided the retroactive date is on or before the effective date of this Agreement and there is no prior or pending date added to the policy after the inception of this Agreement.

QUESTIONS

Consult with your insurance agent or broker on how to acquire the required coverages, endorsements, and waivers needed for your Agreement.

For additional information or questions concerning coverage or acceptable forms, Contractor may contact the Purchasing Division at 402-441-8103, or the Department that issues the Agreement. For general questions regarding Insurance Requirements, please contact the City of Lincoln Risk Management at 402-441-7671 or County of Lancaster, Nebraska's Risk Management at 402-441-6510, as appropriate.

E-mail Address (Internal use only) rweiss@pinnaclebankarena.com

INSTRUCTIONS TO BIDDERS

"Owner(s)" shall mean any, all, or a combination of the City of Lincoln, County of Lancaster, Nebraska, Lincoln-Lancaster County Public Building Commission, and/or the West Haymarket Joint Public Agency.

1. BIDDING PROCEDURE

1.1. Bidders shall use the electronic bid system for submitting solicitation responses and must complete all required fields.

1.2. EBID/IONWAVE REGISTRATION

Bidders must be registered on the Owner's Ebid site to submit a response to any solicitation.

1.2.1 To register in Ebid, click on this link: https://col.ionwave.net/Login.aspx

1.2.2. Click on "Supplier Registration" in blue box and follow the instructions to complete the registration.

1.3. Solicitation responses will not be accepted after the closing time and date.

1.4. Bidders should include any deviations of the solicitation documents and the proposed replacement language on company letterhead and attach in the Response Attachment tab in Ebid. Failure to include deviations with the solicitation response will indicate the Bidder agrees to all terms and conditions outlined in the solicitation documents with no exceptions. The Owner reserves the right to accept or reject the deviations according to the best interests of the Owner. Deviations that are not acceptable to the Owner and not negotiable, may result in the Bidder being deemed as "non-responsive" and rejection of the response.

1.5. Bidders shall not attempt to influence or discuss this solicitation with any Owner employee, elected official, agent, or evaluator other than the Purchasing Staff through the award process.

1.5.1 Failure to follow this requirement may result in immediate disqualification of your response.

1.5.2 From the date the solicitation is issued until the award notification is issued, communication is limited to the Purchasing staff. After the award notification is issued, the Bidder may communicate with individuals of the Owner responsible for negotiating the contract.

1.6. The Owner reserves the right to reject a response, withdraw an award notification, or terminate a contract if it is determined there has been a violation of these purchasing procedures.

1.7. If bidding on a construction contract, the Owner's most current Standard Specifications for Municipal Construction shall apply, found at: https://www.lincoln.ne.gov/Owner/Departments/LTU/Transportation/Standards/Standard-Specs.

2. CLARIFICATION OF BIDDING DOCUMENTS

2.1 Bidders shall promptly notify Purchasing staff of any ambiguity, inconsistency, or error which they may discover upon examination of the bidding documents.

2.2 Questions regarding the meaning, interpretation or clarification of any solicitation provision should be submitted through Ebid under the Questions tab. The Owner is not obligated to respond to questions that are received after the Question Cutoff date and time in Ebid.

2.3 Changes made to the bidding documents may be issued electronically via addendum in Ebid. Addendums are issued by Purchasing prior to the closing date for solicitations which modify or interpret the bidding document by addition, deletion, clarification, or correction.

2.4 Oral interpretations or changes to the bidding documents made in any manner other than written form will not be binding on the Owner; and Bidders shall not rely upon such interpretations or changes.

3. INDEPENDENT PRICE DETERMINATION

3.1 By electronically signing and submitting a response, the Bidder agrees the submitted pricing has been arrived at independently, without consultation, communication, or agreement for the purpose of restricting competition, as to any matter relating to such prices with any other Bidder or with any competitor; unless otherwise required by law, the prices which have been submitted in the response have not been knowingly disclosed by the Bidder prior to the solicitation opening directly or indirectly to any other Bidder or to any competitor; no attempt has been made, or will be made, by the Bidder to induce any person or firm to submit, or not to submit, a response for the purpose of restricting competition.

4. BRAND NAMES/ALTERNATES

4.1 If alternates are allowed, it is the Bidder's responsibility to identify any alternate items and prove to the satisfaction of the Owner that said item is equal to, or better than, the product specified.

4.1.1 Alternate items shall be stated in the appropriate space in Ebid Line Item, or if the Ebid Line Item does not contain blanks for alternates, Bidder should attach a statement in Ebid on Company letterhead identifying the manufacturer and brand name of each proposed alternate, plus a complete description of the alternate items including illustrations, performance test data, and any other information necessary for an evaluation.

4.1.2 Bidders must indicate any variances by item number from the bidding document no matter how slight.

4.2 If alternates are not stated in the response, it will be assumed that the item being provided fully complies with the Owner's solicitation documents.

5. DEMONSTRATIONS/SAMPLES

5.1. If requested by the Owner, Bidders shall provide and/or demonstrate the exact item(s) proposed within seven (7) calendar days from receipt of such request.

5.2. Such demonstration(s) can be at the Owner delivery location or a surrounding community.

5.3. If items are small and mailable and the Bidder is proposing an alternate product, the Bidder shall supply a sample of the exact item. Samples will be returned at Bidder's expense after receipt by the Owner of acceptable goods. The Bidder should indicate how samples are to be returned.

5.4. When requested, samples will be furnished at the Bidder's expense prior to the closing of the solicitation, unless another time is specified. Each sample should be labeled clearly, and identify the Bidder's name, the solicitation number and title, item number, and the brand and model number, if applicable. Samples submitted must be the commodities or equipment which would be delivered if awarded the solicitation.

5.5. The Owner reserves the right to request samples even though this may not have been set forth in the solicitation.

5.6. Samples may be destroyed in testing. If a sample is not destroyed in testing and a Bidder wishes to have the sample returned, it will be returned at the Bidder's expense upon request.

5.7. The sample will not be returned until thirty (30) calendar days after any protest or the execution of a contract. The Bidder shall have ten (10) calendar days to arrange for the return of the sample following any of the above dates. If no request from the Bidder is received within the above dates, the Owner reserves the right to use, donate, or surplus the samples in accordance with the Owner's policies.

6. DELIVERY (Non-Construction)

6.1. The Owner reserves the right to cancel orders, or any part thereof, without obligation, if delivery is not made within the specified time(s).

6.2. All prices shall be based upon inside delivery of the equipment/merchandise F.O.B. Destination to the Owner at the location specified by the Owner, with all transportation charges paid.

6.3. At the time of delivery, a designated Owner employee will sign the invoice/packing slip. The signature will only indicate that the order has been received and the items delivered agree with the delivery invoice. This signature does not indicate all items met specifications, were received in good condition and/or that there is not possible hidden damage or shortages.

7. WARRANTIES AND GUARANTEES

7.1. Warranties, guarantees, and maintenance policies should be uploaded in Ebid in the Response Attachments tab.

7.2. Bid specifications shall set forth warranties and guarantees. If not described therein, then as a minimum requirement of the Owner, the Bidder will guarantee in writing that any defective components discovered within a one (1) year period after the date of acceptance of products shall be replaced at no expense to the Owner. Replacement parts of defective components shall be shipped at no cost to the Owner. Shipping costs for defective parts required to be returned to the Bidder shall be paid by the Bidder. Work performed for services shall include a one (1) year warranty beginning upon completion of services. There shall be an additional one (1) year warranty for defects in services rendered beginning on the date that the defects are corrected.

8. BID SECURITY, (if required)

8.1. Bid security, as a guarantee of good faith, in the form of a certified check, cashier's check, or bid bond, may be required to be submitted with the solicitation, as indicated on the solicitation.

8.1.1. Bid security, if required, shall be in the amount specified in the solicitation. The bid security may be scanned and attached to the Response Attachments section of your response in Ebid. The original bid security should then be sent or delivered to the office of the Purchasing Division, 440 S. 8th St., Ste. 200, Lincoln, NE 68508 within three (3) days of closing.

8.1.2. If the bid security is not received in the office of the Purchasing Division as stated above, the Bidder may be determined to be non-responsive.

8.2. If alternates are submitted, only one bid security will be required, provided the bid security is based on the amount of the highest gross bid.

8.3. Such bid security may be returned to the unsuccessful Bidders when the award of the solicitation is made.

8.3.1. Bid security may be returned to the successful Bidder(s) as follows:

8.3.2. For purchase orders, upon the delivery of all equipment or merchandise, and upon final acceptance by the Owner.

8.3.3. For all other contracts, upon approval by the Owner of the executed contract and bonds.

8.4. Owner shall have the right to retain the bid security of Bidders to whom an award is being considered until either:

8.4.1. A contract has been executed and bonds have been furnished.

8.4.2. The specified time has elapsed so the solicitations may be withdrawn.

8.4.3. All responses have been rejected.

8.4.4. Bid security will be forfeited to the Owner as full liquidated damages, but not as a penalty, if the Bidder fails or refuses to enter a contract on forms provided by the Owner, and/or if the Bidder fails to provide sufficient bonds or insurance within the period as established in this bidding document.

9. REFERENCE CHECKS

9.1. The Owner reserves the right to conduct and consider reference checks. By submitting a response to this solicitation, the Bidder grants the Owner the right to contact or arrange a visit in person with any or all the Bidder's clients. Reference checks may be grounds to deem Bidder not responsible, not award, withdraw an award notification, or rescind the award of a contract.

10. SOLICITATION EVALUATION AND AWARD

10.1. The electronic signature shall be considered an offer on the part of the Bidder. The offer shall be deemed accepted upon issuance by the Owner of purchase orders, contract award notifications, or other contract documents appropriate to the work.

10.2. No response shall be modified or withdrawn for a period of ninety (90) calendar days after closing date and time.

10.3. In case of a discrepancy between the unit prices and their extensions, the unit prices shall govern.

10.4. The solicitation will be awarded to the lowest responsive, responsible Bidder whose offer will be most advantageous to the Owner, and as the Owner deems will best serve the requirements and interests of the Owner.

10.5. The Owner reserves the right to accept or reject any or all responses; to request rebids; to award item-by-item, with or without alternates, by groups, or "lump sum"; to waive minor irregularities; request a best and final offer (BAFO); such as shall best serve the requirements and interests of the Owner.

10.6. To determine if the Bidder has the experience, qualifications, resources, and necessary attributes to provide the quality workmanship, materials and management required by the plans and specifications, the Bidder may be required to complete and submit additional information as deemed necessary by the Owner. Failure to provide the information requested to make this determination may be grounds for a declaration of non-responsive with respect to the Bidder.

10.7. The Owner reserves the right to reject irregular responses that contain unauthorized additions, conditions, alternate responses, or irregularities that make the solicitation incomplete, indefinite or ambiguous.

10.8. If allowed, any governmental agency may piggyback on any purchase order or contract established from this solicitation.

11. EXECUTION OF AGREEMENT

11.1. Depending on the type of service or commodity provided, one of the following methods will be employed.

11.1.1. **PURCHASE ORDER**

A copy of the Bidder's response (or referenced solicitation number) attached and that the same, in all particulars, becomes the contract between the parties hereto that both parties thereby accept and agree to the terms and conditions of said solicitation documents.

11.1.2. **CONTRACT**

11.1.2.1 Owner will prepare and furnish a Contract to the successful Bidder.

11.1.2.2 The successful Bidder shall provide proof of insurance as evidenced by a Certificate of Insurance, along with endorsements and waivers (as required), surety bonds properly executed (as required), and Contract signed and dated.

11.1.2.3 The prepared documents should be returned to the Purchasing Office within 10 days (unless otherwise noted).

11.1.2.4 The Owner will sign and date the Contract when (a), (b), and (c) are completed.

11.1.2.5 Upon approval and signature, the Owner will return one electronic copy to the successful Bidder.

12. LAWS

12.1. The laws of the State of Nebraska shall govern the rights, obligations, and remedies of the parties under this solicitation and any contract reached as a result of this process.

12.2. Bidder agrees to abide by all applicable local, state, and federal laws and regulations, including those concerning the handling and disclosure of private and confidential information from individuals and corporations as to inventions, copyrights, patents, and patent rights.

12.3. If there are any conflicts or inconsistencies between the Bidder's documents and the Owner's documents, the Owner's documents shall control.

13. TAX ASSESSMENT

13.1. Any solicitation for public improvement shall comply with Nebraska Revised Statutes Sections 77-1323 and 77-1324. In that regard, every person, partnership, limited liability company, association or corporation furnishing labor or material in the repair, alteration, improvement, erection, or construction of any public improvement shall sign a certified statement which will accompany the contract. The certified statement shall state that all equipment to be used on the project, except that acquired since the assessment date, has been assessed for taxation for the current year, giving the county where assessed.

14. EQUAL OPPORTUNITY

14.1. The Owner requires compliance with all federal, state, and local laws, rules, and regulations regarding equal opportunity for all Bidders and encourages minority businesses, women's businesses, and locally owned business enterprises to participate in our bidding process.

15. LIVING WAGE, (if applicable)

15.1. The Bidder shall be responsible for determining whether it is subject to the Living Wage ordinance in the event it is awarded the contract.

15.2. If the contract is subject to the Owner's Living Wage pursuant to Section 2.81 of the Lincoln Municipal Code, the Bidder agrees to pay all employees employed in the performance of this contract, a base wage of not less than the Owner's Living Wage. This wage is subject to change every July.

16. INSURANCE

16.1. Bidders shall take special notice of the insurance provisions required for Owner contracts (if applicable, see *Insurance Requirements in the Attachments tab in Ebid*).

17. TAXES AND TAX EXEMPTION CERTIFICATE

17.1. The Owner is generally exempt from any taxes imposed by the state or federal government. A Tax Exemption Certificate will be provided as applicable.

17.2. The Water Division of the City of Lincoln is taxable per Reg. 066.14A and no exemption certificate will be issued.

18. AUDIT

18.1. All parties of any Owner agreement shall be subject to audit and shall make available to a contract auditor, as defined therein, copies of all financial and performance-related records and materials germane to the contract/order, as allowed by law.

19. E-VERIFY

19.1. In accordance with Neb. Rev. Stat. 4-108 through 4-114, the awarded Bidder agrees to register with and use a federal immigration verification system, to determine the work eligibility status of new employees performing services within the state of Nebraska. A federal immigration verification system means the electronic verification of the work authorization program of the Illegal Immigration Reform and Immigrant Responsibility Act of 1996, 8 U.S.C. 1324 a, otherwise known as the E-Verify Program, or an equivalent federal program designated by the United States Department of Homeland Security or other federal agency authorized to verify the work eligibility status of a newly hired employee pursuant to the Immigration Reform and Control Act of 1986. The winning Bidder shall not discriminate against any employee or applicant for employment to be employed in the performance of this section pursuant to the requirements of state law and 8 U.S.C.A 1324b. The winning Bidder shall require any subcontractor to comply with the provisions of this section. For information on the E-Verify Program, go to www.uscis.gov/everify.

CERTIFICATE OF LIABILITY INSURANCE

DATE (MM/DD/YYYY): 2/25/2026

THIS CERTIFICATE IS ISSUED AS A MATTER OF INFORMATION ONLY AND CONFERS NO RIGHTS UPON THE CERTIFICATE HOLDER. THIS CERTIFICATE DOES NOT AFFIRMATIVELY OR NEGATIVELY AMEND, EXTEND OR ALTER THE COVERAGE AFFORDED BY THE POLICIES BELOW. THIS CERTIFICATE OF INSURANCE DOES NOT CONSTITUTE A CONTRACT BETWEEN THE ISSUING INSURER(S), AUTHORIZED REPRESENTATIVE OR PRODUCER, AND THE CERTIFICATE HOLDER.

IMPORTANT: If the certificate holder is an ADDITIONAL INSURED, the policy(ies) must have ADDITIONAL INSURED provisions or be endorsed. If SUBROGATION IS WAIVED, subject to the terms and conditions of the policy, certain policies may require an endorsement. A statement on this certificate does not confer rights to the certificate holder in lieu of such endorsement(s).

PRODUCER	CONTACT NAME: Mercedes Butcher	
UNICO Group 1128 Lincoln Mall, Suite 200 Lincoln, NE, 68508	PHONE (A/C, No, Ext): (402) 434-7200	FAX (A/C, No):
	E-MAIL ADDRESS: mbutcher@unicogroup.com	
	INSURER(S) AFFORDING COVERAGE	NAIC #
	INSURER A : Cincinnati Insurance Company	10677
INSURED Arrowhead Development LLC PO Box 184 Seward, NE, 68434-0184	INSURER B : Cincinnati Casualty Co.	28665
	INSURER C : Lloyd's Syndicate	
	INSURER D :	
	INSURER E :	
	INSURER F :	

COVERAGES **CERTIFICATE NUMBER: 1772038761399** **REVISION NUMBER:**

THIS IS TO CERTIFY THAT THE POLICIES OF INSURANCE LISTED BELOW HAVE BEEN ISSUED TO THE INSURED NAMED ABOVE FOR THE POLICY PERIOD INDICATED. NOTWITHSTANDING ANY REQUIREMENT, TERM OR CONDITION OF ANY CONTRACT OR OTHER DOCUMENT WITH RESPECT TO WHICH THIS CERTIFICATE MAY BE ISSUED OR MAY PERTAIN, THE INSURANCE AFFORDED BY THE POLICIES DESCRIBED HEREIN IS SUBJECT TO ALL THE TERMS, EXCLUSIONS AND CONDITIONS OF SUCH POLICIES. LIMITS SHOWN MAY HAVE BEEN REDUCED BY PAID CLAIMS.

INSR LTR	TYPE OF INSURANCE	ADDL INSD	SUBR WVD	POLICY NUMBER	POLICY EFF (MM/DD/YYYY)	POLICY EXP (MM/DD/YYYY)	LIMITS	
A	X COMMERCIAL GENERAL LIABILITY CLAIMS-MADE / X OCCUR GEN'L AGGREGATE LIMIT APPLIES PER: POLICY / PRO-JECT / LOC X OTHER: Policy, Proj, & Loc	Y	Y	EPP 0754179	8/1/2025	8/1/2026	EACH OCCURRENCE DAMAGE TO RENTED PREMISES (Ea occurrence) MED EXP (Any one person) PERSONAL & ADV INJURY GENERAL AGGREGATE PRODUCTS - COMP/OP AGG	$ 1,000,000 $ 100,000 $ 10,000 $ 1,000,000 $ 2,000,000 $ 2,000,000
A	AUTOMOBILE LIABILITY X ANY AUTO OWNED AUTOS ONLY / SCHEDULED AUTOS HIRED AUTOS ONLY / NON-OWNED AUTOS ONLY	Y	Y	EPP 0754179	8/1/2025	8/1/2026	COMBINED SINGLE LIMIT (Ea accident) BODILY INJURY (Per person) BODILY INJURY (Per accident) PROPERTY DAMAGE (Per accident)	$ 1,000,000 $ $ $
A	X UMBRELLA LIAB / X OCCUR EXCESS LIAB / CLAIMS-MADE DED / RETENTION $	Y	Y	EPP 0754179	8/1/2025	8/1/2026	EACH OCCURRENCE AGGREGATE	$ 5,000,000 $ 5,000,000
B	WORKERS COMPENSATION AND EMPLOYERS' LIABILITY ANY PROPRIETOR/PARTNER/EXECUTIVE OFFICER/MEMBER EXCLUDED? (Mandatory In NH) Y / N: N If yes, describe under DESCRIPTION OF OPERATIONS below	N/A	Y	EWC 0754180	8/1/2025	8/1/2026	X PER STATUTE / OTH-ER E.L. EACH ACCIDENT E.L. DISEASE - EA EMPLOYEE E.L. DISEASE - POLICY LIMIT	$ 1,000,000 $ 1,000,000 $ 1,000,000
A	Installation Floater			EPP 0754179	8/1/2025	8/1/2026	Limit	$250,000
A	Electronic Data Liability			EPP 0754179	8/1/2025	8/1/2026	Limit	$250,000
C	Professional/Pollution			ANE5569827.25	8/1/2025	8/1/2026	Limit	1,000/3,000,000

DESCRIPTION OF OPERATIONS / LOCATIONS / VEHICLES (ACORD 101, Additional Remarks Schedule, may be attached if more space is required)

See notes attached

CERTIFICATE HOLDER

West Haymarket Joint Public Agency
555 S. 10th Street
Lincoln, NE, 68508

CANCELLATION

SHOULD ANY OF THE ABOVE DESCRIBED POLICIES BE CANCELLED BEFORE THE EXPIRATION DATE THEREOF, NOTICE WILL BE DELIVERED IN ACCORDANCE WITH THE POLICY PROVISIONS.

AUTHORIZED REPRESENTATIVE

© 1988-2015 ACORD CORPORATION. All rights reserved.

The ACORD name and logo are registered marks of ACORD

NOTES:

INSURED'S NAME Arrowhead Development LLC

PAGE

Date 2/25/2026

New Mezzanine Storage Loft, Pinnacle Bank Arena, Bid No. 25-193. The General Liability policy includes a blanket automatic additional insured endorsement that provides additional insured status on a primary and non-contributing basis including completed operations only when there is a written contract between the named insured and the certificate holder/entity(ies) that requires such status. The Business Auto Liability policy includes a blanket automatic additional insured endorsement that provides additional insured status on a primary and non-contributing basis only when there is a written contract between the named insured and the certificate holder/entity(ies) that requires such status. The General Liability, Business Auto Liability & Workers Compensation policies include blanket automatic waiver of subrogation endorsements that provide waiver in favor of the certificate holder/entity(ies) when required by written contract with the named insured prior to a loss. The Umbrella policy is following form. The blanket automatic endorsements provide additional insured status and waiver of subrogation for West Haymarket Joint Public Agency.

THIS ENDORSEMENT CHANGES THE POLICY. PLEASE READ IT CAREFULLY.

CONTRACTORS' COMMERCIAL GENERAL LIABILITY BROADENED ENDORSEMENT

This endorsement modifies insurance provided under the following:

COMMERCIAL GENERAL LIABILITY COVERAGE PART

A. Endorsement - Table of Contents:

Coverage:	Begins on Page:
1. Employee Benefit Liability Coverage	2
2. Unintentional Failure To Disclose Hazards	10
3. Damage To Premises Rented To You	10
4. Supplementary Payments	11
5. Medical Payments	11
6. 180 Day Coverage For Newly Formed Or Acquired Organizations	11
7. Waiver Of Subrogation	11
8. Automatic Additional Insured - Specified Relationships:	12
(a) Managers Or Lessors Of Premises	
(b) Lessor Of Leased Equipment	
(c) Vendors	
(d) State Or Governmental Agency Or Subdivision Or Political Subdivision - Permits Or Authorizations Relating To Premises	
(e) Mortgagee, Assignee Or Receiver	
9. Property Damage To Borrowed Equipment	15
10. Employees As Insureds - Specified Health Care Services And Good Samaritan Services	15
11. Broadened Notice Of Occurrence	16
12. Nonowned Aircraft	16
13. Bodily Injury Redefined	16
14. Expected Or Intended Injury Redefined	16
15. Former Employees As Insureds	16
16. Voluntary Property Damage Coverage and Care, Custody Or Control Liability Coverage	16
17. Broadened Contractual Liability - Work Within 50' Of Railroad Property	18
18. Alienated Premises	18

B. Limits Of Insurance:

The Commercial General Liability Limits of Insurance apply to the insurance provided by this endorsement, except as provided below:

1. Employee Benefit Liability Coverage

Each Employee Limit: $1,000,000
Aggregate Limit: $3,000,000
Deductible Amount: $ 1,000

3. Damage To Premises Rented To You

The lesser of:
a. The Each Occurrence Limit shown in the Declarations; or
b. $500,000 unless otherwise stated $ _____

4. Supplementary Payments

a. Bail Bonds: $2,500
b. Loss Of Earnings: $ 500

Includes copyrighted material of Insurance Services Office, Inc., with its permission.

5. Medical Payments

Medical Expense Limit: $10,000

9. Property Damage To Borrowed Equipment

Each Occurrence Limit: $10,000
Deductible Amount: $ 250

16. Voluntary Property Damage Coverage (Coverage D) and Care, Custody Or Control Liability Coverage

Limits Of Insurance
Voluntary Property Damage Coverage:
$1,000 Each Occurrence
$5,000 Aggregate
Care, Custody Or Control Liability Coverage:
$5,000 Each Occurrence unless otherwise stated $ _____

Deductible Amount (Each Occurrence)
Voluntary Property Damage Coverage: $250
Care, Custody Or Control Liability Coverage: $250 unless otherwise stated $ _____

COVERAGE	PREMIUM BASIS (a) Area (b) Payroll (c) Gross Sales (d) Units (e) Other	RATE (For Limits in Excess of $5,000)	ADVANCE PREMIUM (For Limits in Excess of $5,000)
Care, Custody Or Control Liability			$
TOTAL ANNUAL PREMIUM			$

C. Coverages

1. Employee Benefit Liability Coverage

a. The following is added to **Section I - Coverages:**

EMPLOYEE BENEFIT LIABILITY COVERAGE

(1) Insuring Agreement

(a) We will pay those sums that the insured becomes legally obligated to pay as damages caused by any act, error or omission of the insured, or of any other person for whose acts the insured is legally liable, to which this insurance applies. We will have the right and duty to defend the insured against any "suit" seeking those damages. However, we will have no duty to defend against any "suit" seeking damages to which this insurance does not apply. We may, at our discretion, investigate any report of an act, error or omission and settle any claim or "suit" that may result. But:

1) The amount we will pay for damages is limited as described in **C.** Coverages, **1.** Employee Benefit Liability Coverage, **c.** Limits Of Insurance of this endorsement; and

2) Our right and duty to defend ends when we have used up the applicable limit of insurance in the payment of judgments or settlements.

No other obligation or liability to pay sums or perform acts or services is covered unless explicitly provided for under Supplementary Payments.

(b) This insurance applies to damages only if the act, error or omission is negligently committed in the "administration" of your "employee benefit program"; and

1) Occurs during the policy period; or

Includes copyrighted material of Insurance Services Office, Inc., with its permission.

2) Occurred prior to the "first effective date" of this endorsement provided:

a) You did not have knowledge of a claim or "suit" on or before the "first effective date" of this endorsement.

You will be deemed to have knowledge of a claim or "suit" when any insured listed under **C.** Coverages, **1.** Employee Benefit Liability Coverage, **b.** Who Is An Insured, **(1)** of this endorsement or any "employee" authorized by you to give or receive notice of a claim or "suit":

i) Reports all, or any part, of the act, error or omission to us or any other insurer;

ii) Receives a written or verbal demand or claim for damages because of the act, error or omission; and

b) There is no other applicable insurance.

(2) Exclusions

This insurance does not apply to:

(a) Bodily Injury, Property Damage Or Personal And Advertising Injury

"Bodily injury", "property damage" or "personal and advertising injury".

(b) Dishonest, Fraudulent, Criminal Or Malicious Act

Damages arising out of any intentional, dishonest, fraudulent, criminal or malicious act, error or omission, committed by any insured, including the willful or reckless violation of any statute.

(c) Failure To Perform A Contract

Damages arising out of failure of performance of contract by any insurer.

(d) Insufficiency Of Funds

Damages arising out of an insufficiency of funds to meet any obligations under any plan included in the "employee benefit program".

(e) Inadequacy Of Performance Of Investment/Advice Given With Respect To Participation

Any claim based upon:

1) Failure of any investment to perform;

2) Errors in providing information on past performance of investment vehicles; or

3) Advice given to any person with respect to that person's decision to participate or not to participate in any plan included in the "employee benefit program".

(f) Workers' Compensation And Similar Laws

Any claim arising out of your failure to comply with the mandatory provisions of any workers' compensation, unemployment compensation insurance, social security or disability benefits law or any similar law.

(g) ERISA

Damages for which any insured is liable because of liability imposed on a fiduciary by the Employee Retirement Income Security Act of 1974, as now or hereafter amended, or by any similar federal, state or local laws.

Includes copyrighted material of Insurance Services Office, Inc., with its permission.

(h) Available Benefits

Any claim for benefits to the extent that such benefits are available, with reasonable effort and cooperation of the insured, from the applicable funds accrued or other collectible insurance.

(i) Taxes, Fines Or Penalties

Taxes, fines or penalties, including those imposed under the Internal Revenue Code or any similar state or local law.

(j) Employment-Related Practices

Any liability arising out of any:

1) Refusal to employ;

2) Termination of employment;

3) Coercion, demotion, evaluation, reassignment, discipline, defamation, harassment, humiliation, discrimination or other employment-related practices, acts or omissions; or

4) Consequential liability as a result of **1)**, **2)** or **3)** above.

This exclusion applies whether the insured may be held liable as an employer or in any other capacity and to any obligation to share damages with or repay someone else who must pay damages because of the injury.

(k) Cyber

Any liability, costs, expenses or damages arising, directly or indirectly, out of or as a consequence of any:

1) "Computer attack";

2) "Network security incident";

3) "Privacy violation"; or

4) Fraudulent communication that impersonates any person or organization that results in the transfer of funds or other property regardless of the medium or technique used.

(3) Supplementary Payments

Section **I** - Supplementary Payments - Coverages **A** and **B** also apply to this Coverage, however **1.b.** and **2.** of the Supplementary Payments provision do not apply.

b. Who Is An Insured

As respects Employee Benefit Liability Coverage, **Section II - Who Is An Insured** is replaced by the following:

(1) If you are designated in the Declarations as:

(a) An individual, you and your spouse are insureds, but only with respect to the conduct of a business of which you are the sole owner.

(b) A partnership or joint venture, you are an insured. Your members, your partners, and their spouses are also insureds but only with respect to the conduct of your business.

(c) A limited liability company, you are an insured. Your members are also insureds, but only with respect to the conduct of your business. Your managers are insureds, but only with respect to their duties as your managers.

(d) An organization other than a partnership, joint venture or limited liability company, you are an insured. Your "executive officers" and directors are insureds, but only with respect to their duties as your officers or directors. Your stockholders are also insureds, but only with respect to their liability as stockholders.

(e) A trust, you are an insured. Your trustees are also insureds, but only with respect to their duties as trustees.

Includes copyrighted material of Insurance Services Office, Inc., with its permission.

(2) Each of the following is also an insured:

(a) Each of your "employees" who is or was authorized to administer your "employee benefit program";

(b) Any persons, organizations or "employees" having proper temporary authorization to administer your "employee benefit program" if you die, but only until your legal representative is appointed; or

(c) Your legal representative if you die, but only with respect to duties as such. That representative will have all your rights and duties under this Coverage Part.

(3) Any organization you newly acquire or form, other than a partnership, joint venture or limited liability company, and over which you maintain ownership or majority interest, will qualify as a Named Insured if no other similar insurance applies to that organization. However, coverage under this provision:

(a) Is afforded only until the 180th day after you acquire or form the organization or the end of the policy period, whichever is earlier; and

(b) Does not apply to any act, error or omission that was committed before you acquired or formed the organization.

c. Limits Of Insurance

As respects Employee Benefit Liability Coverage, **Section III - Limits Of Insurance** is replaced by the following:

(1) The Limits of Insurance shown in Section **B.** Limits Of Insurance, **1.** Employee Benefit Liability Coverage of this endorsement and the rules below fix the most we will pay regardless of the number of:

(a) Insureds;

(b) Claims made or "suits" brought;

(c) Persons or organizations making claims or bringing "suits";

(d) Acts, errors or omissions; or

(e) Benefits included in your "employee benefit program".

(2) The Aggregate Limit shown in Section **B.** Limits Of Insurance, **1.** Employee Benefit Liability Coverage of this endorsement is the most we will pay for all damages because of acts, errors or omissions negligently committed in the "administration" of your "employee benefit program".

(3) Subject to the limit described in **(2)** above, the Each Employee Limit shown in Section **B.** Limits Of Insurance, **1.** Employee Benefit Liability Coverage of this endorsement is the most we will pay for all damages sustained by any one "employee", including damages sustained by such "employee's" dependents and beneficiaries, as a result of:

(a) An act, error or omission; or

(b) A series of related acts, errors or omissions, regardless of the amount of time that lapses between such acts, errors or omissions;

negligently committed in the "administration" of your "employee benefit program".

However, the amount paid under this endorsement shall not exceed, and will be subject to the limits and restrictions that apply to the payment of benefits in any plan included in the "employee benefit program."

(4) Deductible Amount

(a) Our obligation to pay damages on behalf of the insured applies only to the amount of damages in excess of the Deductible Amount shown in Section **B.** Limits Of Insurance, **1.** Employee Benefit Liability Coverage of this endorsement as applicable to Each Employee. The limits of insurance shall not be reduced

Includes copyrighted material of Insurance Services Office, Inc., with its permission.

by the amount of this deductible.

(b) The Deductible Amount shown in Section **B.** Limits Of Insurance, **1.** Employee Benefit Liability Coverage of this endorsement applies to all damages sustained by any one "employee", including such "employee's" dependents and beneficiaries, because of all acts, errors or omissions to which this insurance applies.

(c) The terms of this insurance, including those with respect to:

1) Our right and duty to defend the insured against any "suits" seeking those damages; and

2) Your duties, and the duties of any other involved insured, in the event of an act, error or omission, or claim;

apply irrespective of the application of the Deductible Amount.

(d) We may pay any part or all of the Deductible Amount to effect settlement of any claim or "suit" and, upon notification of the action taken, you shall promptly reimburse us for such part of the Deductible Amount as we have paid.

d. Additional Conditions

As respects Employee Benefit Liability Coverage, **Section IV - Commercial General Liability Conditions** is amended as follows:

(1) Item **2.** Duties In The Event Of Occurrence, Offense, Claim Or Suit is replaced by the following:

2. Duties In The Event Of An Act, Error, Omission, Claim Or Suit

a. You must see to it that we are notified as soon as practicable of an act, error or omission which may result in a claim. To the extent possible, notice should include:

(1) What the act, error or omission was and when it occurred; and

(2) The names and addresses of anyone who may suffer damages as a result of the act, error or omission.

b. If a claim is made or "suit" is brought against any insured, you must:

(1) Immediately record the specifics of the claim or "suit" and the date received; and

(2) Notify us as soon as practicable.

You must see to it that we receive written notice of the claim or "suit" as soon as practicable.

c. You and any other involved insured must:

(1) Immediately send us copies of any demands, notices, summonses or legal papers received in connection with the claim or "suit";

(2) Authorize us to obtain records and other information;

(3) Cooperate with us in the investigation or settlement of the claim or defense against the "suit"; and

(4) Assist us, upon our request, in the enforcement of any right against any person or organization which may be liable to the insured because of an act, error or omission to which

Includes copyrighted material of Insurance Services Office, Inc., with its permission.

this insurance may also apply.

d. No insured will, except at that insured's own cost, voluntarily make a payment, assume any obligation, or incur any expense without our consent.

(2) Item **4.** Other Insurance is replaced by the following:

4. Other Insurance

If other valid and collectible insurance is available to the insured for a loss we cover under this Employee Benefit Liability Coverage, our obligations are limited as follows:

a. Primary Insurance

This insurance is primary except when **c.** below applies. If this insurance is primary, our obligations are not affected unless any of the other insurance is also primary. Then, we will share with all that other insurance by the method described in Paragraph **b.** below.

b. Method Of Sharing

If all of the other insurance permits contribution by equal shares, we will follow this method also. Under this approach each insurer contributes equal amounts until it has paid its applicable limit of insurance or none of the loss remains, whichever comes first.

If any of the other insurance does not permit contribution by equal shares, we will contribute by limits. Under this method, each insurer's share is based on the ratio of its applicable limit of insurance to the total applicable limits of insurance of all insurers.

c. No Coverage

This insurance shall not cover any loss for which the insured is entitled to recovery under any other insurance in force previous to the effective date of this Employee Benefit Liability Coverage.

e. Additional Definitions

As respects Employee Benefit Liability Coverage, **Section V - Definitions** is amended as follows:

(1) The following definitions are added:

1. "Administration" means:

a. Providing information to "employees", including their dependents and beneficiaries, with respect to eligibility for or scope of "employee benefit programs";

b. Interpreting the "employee benefit programs";

c. Handling records in connection with the "employee benefit programs"; or

d. Effecting, continuing or terminating any "employee's" participation in any benefit included in the "employee benefit program".

However, "administration" does not include:

a. Handling payroll deductions; or

b. The failure to effect or maintain any insurance or adequate limits of coverage of insurance, including but not limited to unemployment insurance, social security benefits, workers' compensation and disability benefits.

2. "Biometric information" means any:

Includes copyrighted material of Insurance Services Office, Inc., with its permission.

a. Biological measurement or physical characteristic of an individual, including but not limited to a retina or iris scan, fingerprint, palmprint, voiceprint, hand or face geometry, vein pattern, genetic data, movement, or any other information that can be used as a form of identification or authentication; or

b. Information, regardless of how it is captured, converted, stored or shared, based on an individual's biological measurement or physical characteristic.

3. "Cafeteria plans" means plans authorized by applicable law to allow "employees" to elect to pay for certain benefits with pre-tax dollars.

4. "Computer attack" means:

a. Unauthorized access or authorized access for an unauthorized purpose;

b. A "malware attack"; or

c. A "denial of service attack";

against any computer, computer system or network of computers or computer systems, including any other machinery or equipment, including their control systems, which are accessed by or integrated into a computer, computer system or network of computers or computer systems.

5. "Denial of service attack" means an attack against a target computer or network of computers designed to overwhelm the capacity of the target computer or network in order to deny or impede users from gaining access to the target computer or network through the internet.

6. "Employee benefit programs" means a program providing some or all of the following benefits to "employees", whether provided through a "cafeteria plan" or otherwise:

a. Group life insurance; group accident or health insurance; dental, vision and hearing plans; and flexible spending accounts; provided that no one other than an "employee" may subscribe to such benefits and such benefits are made generally available to those "employees" who satisfy the plan's eligibility requirements;

b. Profit sharing plans, employee savings plans, employee stock ownership plans, pension plans and stock subscription plans, provided that no one other than an "employee" may subscribe to such benefits and such benefits are made generally available to all "employees" who are eligible under the plan for such benefits;

c. Unemployment insurance, social security benefits, workers' compensation and disability benefits; and

d. Vacation plans, including buy and sell programs; leave of absence programs, including military, maternity, family, and civil leave; tuition assistance plans; transportation and health club subsidies.

7. "First effective date" means the date upon which coverage was first effected in a series of uninterrupted renewals of insurance coverage.

8. "Malware attack" means an attack that damages a computer, computer system or

Includes copyrighted material of Insurance Services Office, Inc., with its permission.

network of computers or computer systems, including any other machinery or equipment, including their control systems, which are accessed by or integrated into a computer, computer system or network of computers or computer systems, or data contained therein arising from malicious code, including, but not limited to, viruses, worms, Trojans, spyware, keyloggers and ransomware.

9. "Network security incident" means a security failure or weakness with respect to a computer, computer system or network of computers or computer systems which allowed one or more of the following to happen:

   a. The propagation or forwarding of malware, including, but not limited to, viruses, worms, Trojans, spyware, keyloggers and ransomware;

   b. The abetting of a "denial of service attack" against one or more other systems;

   c. The loss, release or disclosure of data;

   d. The inability to access a computer system;

   e. The unauthorized access to a computer system.

10. "Privacy law" means any law, statute or regulation enacted or promulgated by or on behalf of any federal, state, local or foreign governmental entity in such entity's regulatory or official capacity that creates legally enforceable responsibilities with respect to:

    a. The collection, use, storage, disclosure, disposal, sharing or disseminating as well as correction or supplementation of personally identifying information, including, but not limited to, "biometric information"; or

    b. The adoption and communication of, as well as compliance with, a "privacy policy".

    "Privacy laws" include, but are not limited to, the European Union General Data Protection Regulation, the California, Consumer Privacy Act and the Illinois Biometric Information Privacy Act.

11. "Privacy policy" means an entity's policy for collection, use, storage, disclosure, disposal, sharing, disseminating and correction or supplementation of personally identifying information, including, but not limited to, "biometric information".

12. "Privacy violation" means failure to comply for any reason with a "privacy law" or "privacy policy".

(2) The following definitions are deleted in their entirety and replaced by the following:

5. "Employee" means a person actively employed, formerly employed, on leave of absence or disabled, or retired. "Employee" includes a "leased worker". "Employee" does not include a "temporary worker".

18. "Suit" means a civil proceeding in which money damages because of an act, error or omission to which this insurance applies are alleged. "Suit" includes:

    a. An arbitration proceeding in which such damages are claimed and to which the insured must submit or does submit with our consent;

    b. Any other alternative dispute resolution proceeding in which such damages are claimed and to which the insured submits with our consent; or

Includes copyrighted material of Insurance Services Office, Inc., with its permission.

c. An appeal of a civil proceeding.

2. **Unintentional Failure To Disclose Hazards**

Section IV - Commercial General Liability Conditions, 6. Representations is amended by the addition of the following:

Based on our dependence upon your representations as to existing hazards, if unintentionally you should fail to disclose all such hazards at the inception date of your policy, we will not reject coverage under this Coverage Part based solely on such failure.

3. **Damage To Premises Rented To You**

a. The last paragraph of **2. Exclusions** under **Section I - Coverage A - Bodily Injury And Property Damage Liability** is replaced by the following:

Exclusions **c.** through **n.** do not apply to damage by fire, explosion, lightning, smoke or soot to premises while rented to you or temporarily occupied by you with permission of the owner, for which the amount we will pay is limited to the Damage To Premises Rented To You Limit as described in Section **III** - Limits Of Insurance.

b. The insurance provided under Section **I** - Coverage **A** - Bodily Injury And Property Damage Liability applies to "property damage" arising out of water damage to premises that are both rented to and occupied by you.

As respects Water Damage Legal Liability, as provided in Paragraph **3.b.** above:

The exclusions under Section **I** - Coverage **A** - Bodily Injury And Property Damage Liability, **2.** Exclusions, other than **i.** War and the Nuclear Energy Liability Exclusion (Broad Form), are deleted and the following are added:

This insurance does not apply to:

(a) "Property damage":

(i) Assumed in any contract or agreement; or

(ii) Caused by or resulting from any of the following:

1) Wear and tear;

2) Rust or other corrosion, decay, deterioration, hidden or latent defect or any quality in property that causes it to damage or destroy itself;

3) Smog;

4) Mechanical breakdown, including rupture or bursting caused by centrifugal force;

5) Settling, cracking, shrinking or expansion;

6) Nesting or infestation, or discharge or release of waste products or secretions, by insects, birds, rodents or other animals; or

7) Presence, growth, proliferation, spread or any activity of fungus, including mold or mildew, and any mycotoxins, spores, scents or byproducts produced or released by fungi.

(b) "Property damage" caused directly or indirectly by any of the following:

(i) Earthquake, volcanic eruption, landslide or any other earth movement;

(ii) Water that backs up or overflows or is otherwise discharged from a sewer, drain, sump, sump pump or related equipment;

(iii) Water under the ground surface pressing on, or flowing or seeping through:

1) Foundations, walls, floors or paved surfaces;

2) Basements, whether paved or not; or

3) Doors, windows or other openings.

(c) "Property damage" caused by or resulting from water that leaks or flows from plumbing, heating, air conditioning, fire protection systems, or other equipment, caused by or resulting from freezing, unless:

(i) You did your best to maintain heat in the building or structure; or

Includes copyrighted material of Insurance Services Office, Inc., with its permission.

(ii) You drained the equipment and shut off the water supply if the heat was not maintained.

(d) "Property damage" to:

(i) Plumbing, heating, air conditioning, fire protection systems, or other equipment or appliances; or

(ii) The interior of any building or structure, or to personal property in the building or structure, caused by or resulting from rain, snow, sleet or ice, whether driven by wind or not.

c. Limit Of Insurance

With respect to the insurance afforded in Paragraphs **3.a.** and **3.b.** above, the Damage To Premises Rented To You Limit as shown in the Declarations is amended as follows:

(1) Paragraph **6.** of Section **III** - Limits Of Insurance is replaced by the following:

6. Subject to Paragraph **5.** above, the Damage To Premises Rented To You Limit is the most we will pay under Coverage **A** - Bodily Injury And Property Damage Liability for damages because of "property damage" to any one premises:

a. While rented to you, or temporarily occupied by you with permission of the owner;

b. In the case of damage by fire, explosion, lightning, smoke or soot, while rented to you; or

c. In the case of damage by water, while rented to and occupied by you.

(2) The most we will pay is limited as described in Section **B.** Limits Of Insurance, **3.** Damage To Premises Rented To You of this endorsement.

4. Supplementary Payments

Under **Section I - Supplementary Payments - Coverages A and B:**

a. Paragraph **1.b.** is replaced by the following:

Up to the limit shown in Section **B.** Limits Of Insurance, **4.a.** Bail Bonds of this endorsement for cost of bail bonds required because of accidents or traffic law violations arising out of the use of any vehicle to which the Bodily Injury Liability Coverage applies. We do not have to furnish these bonds.

b. Paragraph **1.d.** is replaced by the following:

All reasonable expenses incurred by the insured at our request to assist us in the investigation or defense of the claim or "suit", including actual loss of earnings up to the limit shown in Section **B.** Limits Of Insurance, **4.b.** Loss Of Earnings of this endorsement per day because of time off from work.

5. Medical Payments

The Medical Expense Limit of Any One Person as shown in the Declarations is amended to the limit shown in Section **B.** Limits Of Insurance, **5.** Medical Payments of this endorsement.

6. 180 Day Coverage For Newly Formed Or Acquired Organizations

Section II - Who Is An Insured is amended as follows:

Subparagraph **a.** of Paragraph **3.** is replaced by the following:

a. Coverage under this provision is afforded only until the 180th day after you acquire or form the organization or the end of the policy period, whichever is earlier;

7. Waiver Of Subrogation

Section IV - Commercial General Liability Conditions, 8. Transfer Of Rights Of Recovery Against Others To Us is amended by the addition of the following:

We waive any right of recovery against any additional insured under this endorsement, because of any payment we make under this endorsement, to whom the insured has waived its right of recovery in a written contract, written agreement, written permit or written authorization. Such waiver by us applies only to the extent that the insured has waived its right of recovery against such additional insured prior to loss.

Includes copyrighted material of Insurance Services Office, Inc., with its permission.

8. **Automatic Additional Insured - Specified Relationships**

a. The following is added to **Section II - Who Is An Insured**:

(1) Any person(s) or organization(s) described in Paragraph **8.a.(2)** of this endorsement (hereinafter referred to as additional insured) whom you are required to add as an additional insured under this Coverage Part by reason of a written contract, written agreement, written permit or written authorization.

(2) Only the following persons or organizations are additional insureds under this endorsement, and insurance coverage provided to such additional insureds is limited as provided herein:

(a) Managers Or Lessors Of Premises

The manager or lessor of a premises leased to you you are required per Paragraph **8.a.(1)** of this endorsement to provide insurance, but only with respect to liability for "bodily injury", "property damage" or "personal and advertising injury" caused, in whole or in part, by you or those acting on your behalf in connection with the ownership, maintenance or use of that part of the premises leased to you, subject to the following additional exclusions:

This insurance does not apply to:

(i) Any "occurrence" which takes place after you cease to be a tenant in that premises;

(ii) Structural alterations, new construction or demolition operations performed by or on behalf of such additional insured.

(b) Lessor Of Leased Equipment

Any person(s) or organization(s) from whom you lease equipment you are required per Paragraph **8.a.(1)** of this endorsement to provide insurance. Such person(s) or organization(s) are insureds only with respect to liability for "bodily injury", "property damage" or "personal and advertising injury" caused, in whole or in part, by your maintenance, operation or use of equipment leased to you by such person(s) or organization(s). A person's or organization's status as an additional insured under this endorsement ends when their contract or agreement with you for such leased equipment ends. However, this insurance does not apply to any "occurrence" which takes place after the equipment lease expires.

(c) Vendors

Any person or organization (referred to below as vendor) you are required per Paragraph **8.a.(1)** of this endorsement to provide insurance, but only with respect to liability for "bodily injury" or "property damage" arising out of "your products" which are distributed or sold in the regular course of the vendor's business, subject to the following additional exclusions:

(i) The insurance afforded the vendor does not apply to:

1) "Bodily injury" or "property damage" for which the vendor is obligated to pay damages by reason of the assumption of liability in a contract or agreement. This exclusion does not apply to liability for damages that the vendor would have in the absence of the contract or agreement;

2) Any express warranty unauthorized by you;

Includes copyrighted material of Insurance Services Office, Inc., with its permission.

3) Any physical or chemical change in the product made intentionally by the vendor;

4) Repackaging, except when unpacked solely for the purpose of inspection, demonstration, testing, or the substitution of parts under instructions from the manufacturer, and then repackaged in the original container;

5) Any failure to make such inspections, adjustments, tests or servicing as the vendor has agreed to make or normally undertakes to make in the usual course of business, in connection with the distribution or sale of the products;

6) Demonstration, installation, servicing or repair operations, except such operations performed at the vendor's premises in connection with the sale of the product;

7) Products which, after distribution or sale by you, have been labeled or relabeled or used as a container, part or ingredient of any other thing or substance by or for the vendor; or

8) "Bodily injury" or "property damage" arising out of the sole negligence of the vendor for its own acts or omissions or those of its employees or anyone else acting on its behalf. However, this exclusion does not apply to:

a) The exceptions contained in Paragraphs **(c)(i)4)** or **6)** of this endorsement; or

b) Such inspections, adjustments, tests or servicing as the vendor has agreed to make or normally undertakes to make in the usual course of business, in connection with the distribution or sale of the products.

(ii) This insurance does not apply to any insured person or organization:

1) From whom you have acquired such products, or any ingredient, part or container, entering into, accompanying or containing such products; or

2) When liability included within the "products-completed operations hazard" has been excluded under this Coverage Part with respect to such products.

(d) State Or Governmental Agency Or Subdivision Or Political Subdivision - Permits Or Authorizations Relating To Premises

Any state or governmental agency or subdivision or political subdivision you are required per Paragraph **8.a.(1)** of this endorsement to provide insurance, subject to the following additional provision:

Includes copyrighted material of Insurance Services Office, Inc., with its permission.

This insurance applies only with respect to the following hazards for which the state or governmental agency or subdivision or political subdivision has issued a permit or authorization in connection with premises you own, rent or control and to which this insurance applies:

(i) The existence, maintenance, repair, construction, erection or removal of advertising signs, awnings, canopies, cellar entrances, coal holes, driveways, manholes, marquees, hoist away openings, sidewalk vaults, street banners or decorations and similar exposures;

(ii) The construction, erection or removal of elevators; or

(iii) The ownership, maintenance or use of any elevators covered by this insurance.

(e) **Mortgagee, Assignee Or Receiver**

Any person or organization you are required per Paragraph **8.a.(1)** of this endorsement to provide insurance, but only with respect to their liability as mortgagee, assignee or receiver and arising out of the ownership, maintenance or use of the premises by you. However, this insurance does not apply to structural alterations, new construction and demolition operations performed by or for that person or organization.

(3) The insurance afforded to additional insureds described in Paragraph **8.a.(1)** of this endorsement:

(a) Only applies to the extent permitted by law;

(b) Will not be broader than that which you are required by the written contract, written agreement, written permit or written authorization to provide for such additional insured; and

(c) Does not apply to any person, organization, vendor, state, governmental agency or subdivision or political subdivision, specifically named as an additional insured under any other provision of, or endorsement added to, this Coverage Part, provided such other provision or endorsement covers the injury or damage for which this insurance applies.

b. With respect to the insurance afforded to the additional insureds described in Paragraph **8.a.(1)** of this endorsement, the following is added to **Section III - Limits Of Insurance**:

The most we will pay on behalf of the additional insured is the amount of insurance:

(1) Required by the written contract, written agreement, written permit or written authorization described in Paragraph **8.a.(1)** of this endorsement. For the purpose of determining the required amount of insurance only, we will include the minimum amount of any Umbrella liability or Excess Liability coverage required for that additional insured in that written contract, written agreement, written permit or written authorization; or

(2) Available under the applicable limits of insurance;

whichever is less.

This endorsement shall not increase the applicable limits of insurance.

c. **Section IV - Commercial General Liability Conditions** is amended to include the following:

Automatic Additional Insured Provision

This insurance applies only if the "bodily injury" or "property damage" occurs, or the "personal and advertising injury" offense is committed:

(1) During the policy period; and

(2) Subsequent to your execution of the written contract or written agreement, or the issuance of a

Includes copyrighted material of Insurance Services Office, Inc., with its permission.

written permit or written authorization, described in Paragraph **8.a.(1)**.

d. Section IV - Commercial General Liability Conditions is amended as follows:

Condition **4.** Other Insurance is amended to include:

Primary And Noncontributory Insurance

This insurance is primary to and will not seek contribution from any other insurance available to an additional insured per Paragraph **8.a.(1)** of this endorsement provided that:

(1) The additional insured is a Named Insured under such other insurance; and

(2) You have agreed in writing in a contract, agreement, permit or authorization described in **8.a.(2)** of this endorsement that this insurance would be primary and would not seek contribution from any other insurance available to the additional insured.

9. Property Damage To Borrowed Equipment

a. The following is added to Exclusion **2.j.** Damage To Property under Section **I** - Coverage **A** - Bodily Injury And Property Damage Liability:

Paragraphs **(3)** and **(4)** of this exclusion do not apply to tools or equipment loaned to you, provided they are not being used to perform operations at the time of loss.

b. With respect to the insurance provided by this section of the endorsement, the following additional provisions apply:

(1) The Limits of Insurance shown in the Declarations are replaced by the limits shown in Section **B.** Limits Of Insurance, **9.** Property Damage To Borrowed Equipment of this endorsement with respect to coverage provided by this endorsement. These limits are inclusive of and not in addition to the limits being replaced. The Limits of Insurance shown in Section **B.** Limits Of Insurance, **9.** Property Damage To Borrowed Equipment of this endorsement fix the most we will pay in any one "occurrence" regardless of the number of:

(a) Insureds;

(b) Claims made or "suits" brought; or

(c) Persons or organizations making claims or bringing "suits".

(2) Deductible Clause

(a) Our obligation to pay damages on your behalf applies only to the amount of damages for each "occurrence" which are in excess of the Deductible Amount shown in Section **B.** Limits Of Insurance, **9.** Property Damage To Borrowed Equipment of this endorsement. The limits of insurance will not be reduced by the application of such deductible amount.

(b) Section **IV** - Commercial General Liability Conditions, **2.** Duties In The Event Of Occurrence, Offense, Claim Or Suit, applies to each claim or "suit" irrespective of the amount.

(c) We may pay any part or all of the deductible amount to effect settlement of any claim or "suit" and, upon notification of the action taken, you shall promptly reimburse us for such part of the deductible amount as has been paid by us.

10. Employees As Insureds - Specified Health Care Services And Good Samaritan Services

Paragraph **2.a.(1)(d)** under Section **II** - Who Is An Insured does not apply to:

1) Your "employees" who provide professional health care services on your behalf as a duly licensed nurse, emergency medical technician or paramedic in the jurisdiction where an "occurrence" or offense to which this insurance applies takes place; or

2) Your "employees" or "volunteer workers", other than an employed or volunteer doctor, providing first aid or good samaritan services during their work hours for you will be deemed to be acting within the scope of their

Includes copyrighted material of Insurance Services Office, Inc., with its permission.

employment by you or performing duties related to the conduct of your business.

11. Broadened Notice Of Occurrence

Paragraph **a.** of Condition **2. Duties In The Event Of Occurrence, Offense, Claim Or Suit** under **Section IV - Commercial General Liability Conditions** is replaced by the following:

a. You must see to it that we are notified as soon as practicable of an "occurrence" or an offense which may result in a claim. To the extent possible, notice should include:

(1) How, when and where the "occurrence" or offense took place;

(2) The names and addresses of any injured persons and witnesses; and

(3) The nature and location of any injury or damage arising out of the "occurrence" or offense.

This requirement applies only when the "occurrence" or offense is known to any insured listed under Paragraph **1.** of Section **II** - Who Is An Insured or any "employee" authorized by you to give or receive notice of an "occurrence" or offense.

12. Nonowned Aircraft

The following is added to Exclusion **2.g. Aircraft, Auto Or Watercraft** under **Section I - Coverage A - Bodily Injury And Property Damage Liability**:

This exclusion does not apply to an aircraft you do not own, provided that:

a. The pilot in command holds a current effective certificate, issued by a duly constituted authority of the United States of America or Canada, designating that person as a commercial or airline transport pilot;

b. The aircraft is rented with a trained, paid crew; and

c. The aircraft does not transport persons or cargo for a charge.

13. Bodily Injury Redefined

Section V - Definitions, 3. "Bodily injury" is replaced by the following:

3. "Bodily injury" means bodily harm or injury, sickness, disease, disability, humiliation, shock, fright, mental anguish or mental injury, including care, loss of services or death resulting from any of these at any time.

14. Expected Or Intended Injury Redefined

The last sentence of Exclusion **2.a. Expected Or Intended Injury** under **Section I - Coverage A - Bodily Injury And Property Damage Liability** is replaced by the following:

This exclusion does not apply to "bodily injury" or "property damage" resulting from the use of reasonable force to protect persons or property.

15. Former Employees As Insureds

The following is added to Paragraph **2.** under **Section II - Who Is An Insured:**

2. Each of the following is also an insured:

Any of your former "employees", directors, managers, members, partners or "executive officers", including but not limited to retired, disabled or those on leave of absence, but only for acts within the scope of their employment by you or for duties related to the conduct of your business.

16. Voluntary Property Damage Coverage

a. Section I - Coverages is amended to include the following:

COVERAGE D - VOLUNTARY PROPERTY DAMAGE COVERAGE

(1) Insuring Agreement

(a) We will pay the cost to repair or replace "property damage" to property of others arising out of operations incidental to your business when:

1) Damage is caused by you; or

2) Damage occurs while in your possession.

At your written request, we will make this payment regardless of whether you are at fault for the "property damage".

If you, at our request, replace, or make any repairs to, damaged property of others, the amount we will pay under Voluntary Proper-

Includes copyrighted material of Insurance Services Office, Inc., with its permission.

ty Damage Coverage will be determined by your actual cost to replace or repair the damaged property, excluding any profit or overhead.

Any payment we make under Voluntary Property Damage Coverage shall not be interpreted as an admission of liability by you or by us.

It shall be your duty, not our duty, to defend any claim or "suit" to which this insurance applies.

No other obligation or liability to pay sums or perform acts or services is covered.

(b) This insurance applies to "property damage" only if:

1) The "property damage" takes place in the "coverage territory"; and

2) The "property damage" occurs during the policy period.

(2) Exclusions

This insurance does not apply to "property damage" that would be excluded by Coverage **A** - Bodily Injury And Property Damage Liability, **2.** Exclusions, except for **j.** Damage To Property, Paragraphs **(3)**, **(4)**, **(5)** and **(6)**, **k.** Damage To Your Product, and **l.** Damage To Your Work.

(3) Definitions

For purposes of Voluntary Property Damage Coverage only, the following definitions under **Section V - Definitions** are replaced by the following:

13. "Occurrence" means an incident, including continuous or repeated exposure to substantially the same general harmful conditions that result in "property damage".

17. "Property damage" means physical injury to tangible property. Electronic data is not tangible property, and "property damage" does not include disappearance, abstraction or theft.

As used in this definition, electronic data means information, facts or programs, stored as or on, created or used on, transmitted to or from computer software, including systems and applications software, hard or floppy disks, CD-ROMs, tapes, drives, cells, data processing devices or any other media which are used with electronically controlled equipment.

b. Care, Custody Or Control Liability Coverage

For purposes of the coverage provided by Care, Custody Or Control Liability Coverage in this endorsement only:

(1) Section **I** - Coverage **A** - Bodily Injury And Property Damage Liability, **2.** Exclusions, **j.** Damage To Property, Paragraphs **(3)**, **(4)** and **(5)** do not apply to "property damage" to the property of others described therein.

(2) It shall be your duty, not our duty, to defend any claim or "suit" to which this insurance applies.

No other obligation or liability to pay sums or perform acts or services is covered.

This Paragraph **(2)** supersedes any provision in the Coverage Part to the contrary.

(3) "Property damage" for which Care, Custody Or Control Liability Coverage provides coverage shall be deemed to be caused by an "occurrence" but shall not serve to limit or restrict the applicability of any exclusion for "property damage" under this Coverage Part.

c. Limits Of Insurance And Deductibles

For purposes of the coverage provided by Voluntary Property Damage Coverage and Care, Custody Or Control Liability Coverage, **Section III - Limits Of Insurance** is amended to include the following:

(1) The Limits of Insurance shown in the Declarations are replaced by the limits shown in Section **B.**

Includes copyrighted material of Insurance Services Office, Inc., with its permission.

Limits Of Insurance, **16.** Voluntary Property Damage Coverage and Care, Custody Or Control Liability Coverage in this endorsement. These limits are inclusive of, and not in addition to, the limits being replaced. The Limits of Insurance shown in the Schedule fix the most we will pay regardless of the number of:

(a) Insureds;

(b) Claims made or "suits" brought; or

(c) Persons or organizations making claims or bringing "suits".

(2) **(a)** Subject to **(3)** below, the Voluntary Property Damage Coverage Each Occurrence Limit Of Insurance is the most we will pay for the sum of damages under Voluntary Property Damage Coverage;

(b) The Care, Custody Or Control Liability Coverage Each Occurrence Limit Of Insurance is the most we will pay for the sum of damages under Care, Custody Or Control Liability Coverage;

because of all "property damage" arising out of any one "occurrence".

(3) The Voluntary Property Damage Coverage, Aggregate Limit Of Insurance is the most we will pay for the sum of all damages under Voluntary Property Damage Coverage. This limit applies separately to each "coverage term".

(4) Deductible Clause

(a) Our obligation to pay damages on your behalf applies only to the amount of damages for each "occurrence" which are in excess of the Deductible Amount shown in Section **B.** Limits Of Insurance, **16.** Voluntary Property Damage Coverage and Care, Custody Or Control Liability Coverage. The limits of insurance will not be reduced by the application of such Deductible Amount.

(b) Section **IV** - Commercial General Liability Conditions, **2.** Duties In The Event Of Occurrence, Offense, Claim Or Suit, applies to each claim or "suit" irrespective of the amount.

(c) We may pay any part or all of the Deductible Amount to effect settlement of any claim or "suit" and, upon notification of the action taken, you shall promptly reimburse us for such part of the Deductible Amount as has been paid by us.

17. Broadened Contractual Liability - Work Within 50' Of Railroad Property

Section V - Definitions, 9. "Insured contract" is amended as follows:

a. Paragraph **c.** is replaced by the following:

c. Any easement or license agreement;

b. Paragraph **f.(1)** is deleted in its entirety.

18. Alienated Premises

Exclusion **2.j.** Damage To Property, Paragraph **(2)** under Section **I** - Coverage **A** - Bodily Injury And Property Damage Liability does not apply if the premises are "your work".

Includes copyrighted material of Insurance Services Office, Inc., with its permission.

THIS ENDORSEMENT CHANGES THE POLICY. PLEASE READ IT CAREFULLY.

CONTRACTORS ADDITIONAL INSURED - AUTOMATIC STATUS AND AUTOMATIC WAIVER OF SUBROGATION WHEN REQUIRED IN WRITTEN CONTRACT, AGREEMENT, PERMIT OR AUTHORIZATION

This endorsement modifies insurance provided under the following:

COMMERCIAL GENERAL LIABILITY COVERAGE PART

A. Additional Insured - Owners, Lessees Or Contractors - Automatic Status For Other Parties When Required In Written Contract Or Agreement With You

1. **Section II - Who Is An Insured** is amended to include as an additional insured any person or organization you have agreed in writing in a contract or agreement to add as an additional insured on this Coverage Part. Such person(s) or organization(s) is an additional insured only with respect to liability for:

   a. "Bodily injury", "property damage" or "personal and advertising injury" *caused, in whole or in part, by* the performance of your ongoing operations by you or on your behalf, under that written contract or written agreement. Ongoing operations does not apply to "bodily injury" or "property damage" occurring after:

      (1) All work, including materials, parts or equipment furnished in connection with such work, on the project (other than service, maintenance or repairs) to be performed by or on behalf of the additional insured(s) at the location of the covered operations has been completed; or

      (2) That portion of "your work" out of which the injury or damage arises has been put to its intended use by any person or organization other than another contractor or subcontractor engaged in performing operations for a principal as a part of the same project; and

   b. "Bodily injury" or "property damage" *caused, in whole or in part, by* "your work" performed under that written contract or written agreement and included in the "products-completed operations hazard", but only if:

      (1) The Coverage Part to which this endorsement is attached provides coverage for "bodily injury" or "property damage" included within the "products-completed operations hazard"; and

      (2) The written contract or written agreement requires you to provide additional insured coverage included within the "products-completed operations hazard" for that person or organization.

      If the written contract or written agreement requires you to provide additional insured coverage included within the "products-completed operations hazard" for a specified length of time for that person or organization, the "bodily injury" or "property damage" must occur prior to the expiration of that period of time in order for this insurance to apply.

      If the written contract or written agreement requires you to provide additional insured coverage for a person or organization per only ISO additional insured endorsement form number **CG 20 10**, without specifying an edition date, and without specifically requiring additional insured coverage included within the "products-completed operations hazard", this Paragraph **b.** does not apply to that person or organization.

2. If the written contract or written agreement described in Paragraph **1.** above specifically requires you to provide additional insured coverage to that person or organization:

   a. *Arising out of* your ongoing operations or *arising out of* "your work"; or

Includes copyrighted material of Insurance Services Office, Inc., with its permission.

b. By way of an edition of an ISO additional insured endorsement that includes *arising out of* your ongoing operations or *arising out of* "your work";

then the phrase *caused, in whole or in part, by* in Paragraph **A.1.a.** and/or Paragraph **A.1.b.** above, whichever applies, is replaced by the phrase *arising out of.*

3. With respect to the insurance afforded to the additional insureds described in Paragraph **A.1.**, the following additional exclusion applies:

   This insurance does not apply to "bodily injury", "property damage" or "personal and advertising injury" arising out of the rendering of, or the failure to render, any professional architectural, engineering or surveying services, including:

   a. The preparing, approving or failing to prepare or approve, maps, shop drawings, opinions, reports, surveys, field orders, change orders or drawings and specifications; or

   b. Supervisory, inspection, architectural or engineering activities.

   This exclusion applies even if the claims against any insured allege negligence or other wrongdoing in the supervision, hiring, employment, training or monitoring of others by that insured, if the "occurrence" which caused the "bodily injury" or "property damage", or the offense which caused the "personal and advertising injury", involved the rendering of, or the failure to render, any professional architectural, engineering or surveying services.

4. This Paragraph **A.** does not apply to additional insureds described in Paragraph **B.**

B. Additional Insured - State Or Governmental Agency Or Subdivision Or Political Subdivision - Automatic Status When Required In Written Permits Or Authorizations

1. **Section II - Who Is An Insured** is amended to include as an additional insured any state or governmental agency or subdivision or political subdivision you have agreed in writing in a permit or authorization to add as an additional insured on this Coverage Part. Such state or governmental agency or subdivision or political subdivision is an additional insured only with respect to operations performed by you or on your behalf for which the state or governmental agency or subdivision or political subdivision has issued, in writing, a permit or authorization.

2. With respect to the insurance afforded to the additional insureds described in Paragraph **B.1.**, the following additional exclusions apply:

   This insurance does not apply to:

   a. "Bodily injury", "property damage" or "personal and advertising injury" arising out of operations performed for the federal government, state or municipality; or

   b. "Bodily injury" or "property damage" included within the "products-completed operations hazard."

C. The insurance afforded to additional insureds described in Paragraphs **A.** and **B.**:

1. Only applies to the extent permitted by law; and

2. Will not be broader than that which you are required by the written contract, written agreement, written permit or written authorization to provide for such additional insured; and

3. Does not apply to any person, organization, state, governmental agency or subdivision or political subdivision specifically named as an additional insured for the same project in the schedule of an endorsement added to this Coverage Part.

D. With respect to the insurance afforded to the additional insureds described in Paragraphs **A.** and **B.**, the following is added to **Section III - Limits Of Insurance:**

The most we will pay on behalf of the additional insured is the amount of insurance:

1. Required by the written contract, written agreement, written permit or written authorization described in Paragraphs **A.** and **B.** For the purpose of determining the required amount of insurance only, we will include the minimum amount of any Umbrella Liability or Excess Liability coverage required for that additional insured in that written contract, written agreement, written permit or written authorization; or

2. Available under the applicable limits of insurance;

whichever is less.

This endorsement shall not increase the applicable limits of insurance.

E. Section IV - Commercial General Liability Conditions is amended to add the following:

Automatic Additional Insured Provision

Includes copyrighted material of Insurance Services Office, Inc., with its permission.

This insurance applies only if the "bodily injury" or "property damage" occurs, or the "personal and advertising injury" offense is committed:

1. During the policy period; and
2. Subsequent to your execution of the written contract or written agreement, or the issuance of a written permit or written authorization, described in Paragraphs **A.** and **B.**

F. Except when **G.** below applies, the following is added to **Section IV - Commercial General Liability Conditions, Other Insurance,** and supersedes any provision to the contrary:

When Other Additional Insured Coverage Applies On An Excess Basis

This insurance is primary to other insurance available to the additional insured described in Paragraphs **A.** and **B.** except:

1. As otherwise provided in **Section IV - Commercial General Liability Conditions, Other Insurance, b. Excess Insurance**; or
2. For any other valid and collectible insurance available to the additional insured as an additional insured on another insurance policy that is written on an excess basis. In such case, this insurance is also excess.

G. The following is added to **Section IV - Commercial General Liability Conditions, Other Insurance,** and supersedes any provision to the contrary:

Primary Insurance When Required By Written Contract, Agreement, Permit Or Authorization

Except when wrap-up insurance applies to the claim or "suit" on behalf of the additional insured, this insurance is primary to any other insurance available to the additional insured described in Paragraphs **A.** and **B.** provided that:

1. The additional insured is a Named Insured under such other insurance; and
2. You have agreed in writing in a contract, agreement, permit or authorization described in Paragraph **A.** or **B.** that this insurance would be primary to any other insurance available to the additional insured.

As used in this endorsement, wrap-up insurance means a centralized insurance program under which one party has secured either insurance or self-insurance covering some or all of the contractors or subcontractors performing work on one or more specific project(s).

Primary And Noncontributory Insurance When Required By Written Contract, Agreement, Permit Or Authorization

Except when wrap-up insurance applies to the claim or "suit" on behalf of the additional insured, this insurance is primary to and will not seek contribution from any other insurance available to the additional insured described in Paragraphs **A.** and **B.** provided that:

1. The additional insured is a Named Insured under such other insurance; and
2. You have agreed in writing in a contract, agreement, permit or authorization described in Paragraph **A.** or **B.** that this insurance would be primary and would not seek contribution from any other insurance available to the additional insured.

As used in this endorsement, wrap-up insurance means a centralized insurance program under which one party has secured either insurance or self-insurance covering some or all of the contractors or subcontractors performing work on one or more specific project(s).

H. **Section IV - Commercial General Liability Conditions, Transfer Of Rights Of Recovery Against Others To Us** is amended by the addition of the following:

Waiver of Subrogation

We waive any right of recovery against any additional insured under this endorsement, because of any payment we make under this endorsement, to whom the insured has waived its right of recovery in a written contract, written agreement, written permit or written authorization. Such waiver by us applies only to the extent that the insured has waived its right of recovery against such additional insured prior to loss.

Includes copyrighted material of Insurance Services Office, Inc., with its permission.

THE CINCINNATI INSURANCE COMPANY

A Stock Insurance Company

COMMERCIAL GENERAL LIABILITY COVERAGE PART DECLARATIONS

Attached to and forming part of POLICY NUMBER: EPP 075 41 79

Named Insured is the same as it appears in the Common Policy Dedarations

LIMITS OF INSURANCE

EACH OCCURRENCE LIMIT	$ 1,000,000	
GENERAL AGGREGATE LIMIT	$ 2,000,000	
PRODUCTS-COMPLETED OPERATIONS AGGREGATE LIMIT	$ 2,000,000	
PERSONAL & ADVERTISING INJURY LIMIT	$ 1,000,000	ANY ONE PERSON OR ORGANIZATION
DAMAGE TO PREMISES RENTED TO YOU LIMIT $100,000 limit unless otherwise indicated herein:	$ SEE GA233	ANY ONE PREMISES
MEDICAL EXPENSE LIMIT $5,000 limit unless otherwise indicated herein:	$ SEE GA233	ANY ONE PERSON

CLASSIFICATION	CODE NO.	PREMIUM BASE A - Area B - Payroll C - Gross Sales D - Units E - Other	RATE Products / Completed Operations	RATE All Other	ADVANCE PREMIUM Products / Completed Operations	ADVANCE PREMIUM All Other
TRAILER RENTAL AGENCIES (NE) INCL PROD AND/OR COMP OP	19796	C 600,000		.357		214
CARPENTRY (NE)	91340	B 145,000	10.178	4.426	1,476	642
CONTRACTORS - EXECUTIVE SUPERVISOR (NE) INCL PROD AND/OR COMP OP	91580	B 170,000		8.192		1,393
CONTRACTORS - SUBCONTRACTED WORK (NE)	91583	E 5,000,000 TOTAL COST	1.726	.542	8,630	2,710
CONTRACTORS - SUBCONTRACTED WORK (NE)	91585	E IF ANY TOTAL COST	.999	.776	STA	STA
WAREHOUSES (NE) INCL PROD AND/OR COMP OP	99938	B 35,000		4.773		167
LOC. 2 - NE CAR WASHES INCL PROD AND/OR COMP OP	10367	C 1,200,000		2.392		2,870
BI EXCEPTIONS TO POLLUTANT EXCLUSION	20410			2%		160
INJURY OR DAMAGE TO OR RESULTING FROM YOUR WORK	21583					50

CLASSIFICATION	CODE NO.	PREMIUM BASE	RATE		ADVANCE PREMIUM	
		A - Area B - Payroll C - Gross Sales D - Units E - Other	Products / Completed Operations	All Other	Products / Completed Operations	All Other
AND INJURY OR DAMAGE RESULTING FROM YOUR PRODUCT						
CONTRACTORS AUTOMATIC ADDL INSURED	29923			3.5%		634
CONTRACTORS BROADENED COVERAGE	29975			3.5%		634

The General Liability Coverage Part is subject to an annual minimum premium.

TOTAL ANNUAL PREMIUM $ 19,580

FORMS AND / OR ENDORSEMENTS APPLICABLE TO COMMERCIAL GENERAL LIABILITY COVERAGE PART:

CG0001	04/13	COMMERCIAL GENERAL LIABILITY COVERAGE FORM
CG0300	01/96	DEDUCTIBLE LIABILITY INSURANCE
CG2106	05/14	EXCLUSION - ACCESS OR DISCLOSURE OF CONFIDENTIAL OR PERSONAL INFORMATION AND DATA-RELATED LIABILITY - WITH LIMITED BODILY INJURY EXCEPTION
CG2132	05/09	COMMUNICABLE DISEASE EXCLUSION
CG2147	12/07	EMPLOYMENT - RELATED PRACTICES EXCLUSION
CG2196	03/05	SILICA OR SILICA-RELATED DUST EXCLUSION
CG2268	09/97	OPERATION OF CUSTOMERS AUTOS ON PARTICULAR PREMISES
CG2279	04/13	EXCLUSION - CONTRACTORS - PROFESSIONAL LIABILITY
CG2503	05/09	DESIGNATED CONSTRUCTION PROJECT(S) GENERAL AGGREGATE LIMIT
CG2504	05/09	DESIGNATED LOCATION(S) GENERAL AGGREGATE LIMIT
GA233	06/23	CONTRACTORS' COMMERCIAL GENERAL LIABILITY BROADENED ENDORSEMENT
GA3064	09/20	EXCLUSION - ASBESTOS
GA3074	06/23	EXCLUSION - CYBER LIABILITY
GA369	09/17	EXCLUSION - EXTERIOR INSULATION AND FINISH SYSTEMS ("EIFS") AND DIRECT-APPLIED EXTERIOR FINISH SYSTEMS ("DEFS") - BROAD FORM WITH SPECIFIED EXCEPTIONS
GA382	03/02	FUNGI OR BACTERIA EXCLUSION
GA4315	09/20	INJURY OR DAMAGE TO OR RESULTING FROM YOUR WORK AND INJURY OR DAMAGE RESULTING FROM YOUR PRODUCT
GA4531	09/20	AMENDMENT - POLLUTANT DEFINITION
GA4533	12/22	COMMERCIAL GENERAL LIABILITY AMENDATORY ENDORSEMENT
GA4566	06/22	AMENDMENT - RECORDING AND DISTRIBUTION OF MATERIAL OR INFORMATION IN VIOLATION OF LAW EXCLUSION
GA472	05/20	CONTRACTORS ADDITIONAL INSURED - AUTOMATIC STATUS AND AUTOMATIC WAIVER OF SUBROGATION WHEN REQUIRED IN WRITTEN CONTRACT, AGREEMENT, PERMIT OR AUTHORIZATION
GA478	09/20	BODILY INJURY EXCEPTIONS TO POLLUTION EXCLUSION

THIS ENDORSEMENT CHANGES THE POLICY. PLEASE READ IT CAREFULLY.

ELECTRONIC DATA LIABILITY

This endorsement modifies insurance provided under the following:

COMMERCIAL GENERAL LIABILITY COVERAGE PART

SCHEDULE

Loss Of Electronic Data Limit:$250,000
Information required to complete this Schedule, if not shown above, will be shown in the Declarations.

A. Exclusion **2.p.** of **Coverage A - Bodily Injury And Property Damage Liability** in **Section I - Coverages** is replaced by the following:

2. Exclusions

This insurance does not apply to:

p. Access Or Disclosure Of Confidential Or Personal Information And Data-related Liability

Damages arising out of:

(1) Any access to or disclosure of any person's or organization's confidential or personal information, including patents, trade secrets, processing methods, customer lists, financial information, credit card information, health information or any other type of nonpublic information; or

(2) The loss of, loss of use of, damage to, corruption of, inability to access, or inability to manipulate "electronic data" that does not result from physical injury to tangible property.

This exclusion applies even if damages are claimed for notification costs, credit monitoring expenses, forensic expenses, public relations expenses or any other loss, cost or expense incurred by you or others arising out of that which is described in Paragraph **(1)** or **(2)** above.

However, unless Paragraph **(1)** above applies, this exclusion does not apply to damages because of "bodily injury".

B. The following is added to Paragraph **2. Exclusions** of **Section I - Coverage B - Personal And Advertising Injury Liability:**

2. Exclusions

This insurance does not apply to:

Access Or Disclosure Of Confidential Or Personal Information

"Personal and advertising injury" arising out of any access to or disclosure of any person's or organization's confidential or personal information, including patents, trade secrets, processing methods, customer lists, financial information, credit card information, health information or any other type of nonpublic information.

This exclusion applies even if damages are claimed for notification costs, credit monitoring expenses, forensic expenses, public relations expenses or any other loss, cost or expense incurred by you or others arising out of any access to or disclosure of any person's or organization's confidential or personal information.

C. The following paragraph is added to **Section III - Limits Of Insurance:**

Subject to **5.** above, the Loss Of Electronic Data Limit shown in the Schedule above is the most we will pay under Coverage **A** for "property damage" because of all loss of "electronic data" arising out of any one "occurrence".

D. The following definition is added to the **Definitions** section:

"Electronic data" means information, facts or programs stored as or on, created or used on, or transmitted to or from computer software, including systems and applications software, hard or floppy disks, CD-ROMs, tapes, drives, cells, data processing devices or any other media

 © Insurance Services Office, Inc., 2013

which are used with electronically controlled equipment.

E. For the purposes of the coverage provided by this endorsement, the definition of "property damage" in the **Definitions** section is replaced by the following:

17. "Property damage" means:

a. Physical injury to tangible property, including all resulting loss of use of that property. All such loss of use shall be deemed to occur at the time of the physical injury that caused it;

b. Loss of use of tangible property that is not physically injured. All such loss of use shall be deemed to occur at the time of the "occurrence" that caused it; or

c. Loss of, loss of use of, damage to, corruption of, inability to access, or inability to properly manipulate "electronic data", resulting from physical injury to tangible property. All such loss of "electronic data" shall be deemed to occur at the time of the "occurrence" that caused it.

For the purposes of this insurance, "electronic data" is not tangible property.

© Insurance Services Office, Inc., 2013

THIS ENDORSEMENT CHANGES THE POLICY. PLEASE READ IT CAREFULLY.

CinciPlus®
BUSINESS AUTO XC+®
(EXPANDED COVERAGE PLUS)
ENDORSEMENT, WITH POLLUTION LIABILITY
FOR COVERED AUTOS

This endorsement modifies insurance provided by the following:

BUSINESS AUTO COVERAGE FORM

With respect to the coverage provided by this endorsement, the provisions of the Coverage Form apply unless modified by this endorsement.

A. Blanket Waiver of Subrogation

SECTION IV - BUSINESS AUTO CONDITIONS, A. Loss Conditions, 5. Transfer of Rights of Recovery Against Others to Us is amended by the addition of the following:

We waive any right of recovery we may have against any person or organization because of payments we make for "bodily injury" or "property damage" arising out of the operation of a covered "auto" when you have assumed liability for such "bodily injury" or "property damage" under an "insured contract", provided the "bodily injury" or "property damage" occurs subsequent to the execution or the "insured contract".

B. Noncontributory Insurance

SECTION IV - BUSINESS AUTO CONDITIONS, B. General Conditions, 5. Other Insurance, c. is deleted its entirety and replaced by the following:

c. Regardless of the provisions of Paragraph **a.** above, this Coverage Form's Liability Coverage is primary and we will not seek contribution from any other insurance for any liability assumed under an "insured contract" that requires liability to be assumed on a primary noncontributory basis.

C. Additional Insured by Contract

SECTION II - COVERED AUTOS LIABILITY COVERAGE, A. Coverage, 1. Who is an Insured is amended to include as an insured any person or organization for whom you have agreed in a valid written contract to provide insurance as afforded by this policy.

This provision is limited to the scope of the valid written contract.

This provision does not apply unless the valid written contract has been:

1. Executed prior to the accident causing "bodily injury" or "property damage"; and
2. Is still in force at the time of the "accident" causing "bodily injury" or "property damage".

D. Employee Hired Auto

1. Changes in Liability Coverage

The following is added to the **Section II - COVERED AUTOS LIABILITY COVERAGE, A. Coverage, 1. Who is an Insured:**

An "employee" of yours is an "insured" while operating an "auto" hired or rented under a contract or agreement in that "employee's" name, with your permission, while performing duties related to the conduct of your business.

2. Changes in General Conditions

SECTION IV - BUSINESS AUTO CONDITIONS, B. General Conditions, 5. Other Insurance, b. is deleted in its entirety and replaced by the following:

b. For Hired Auto Physical Damage Coverage the following are deemed to be covered "autos" you own:

(1) Any covered "auto" you lease, hire, rent or borrow; and

(2) Any covered "auto" hired or rented by your "employee under

Includes copyrighted material of ISO Properties, Inc., with its permission.

a contract in that individual "employee's" name, with your permission, while performing duties related to the conduct of your business.

However, any "auto" that is leased, hired, rented or borrowed with a driver is not a covered "auto".

E. Audio, Visual and Data Electronic Equipment

SECTION III - PHYSICAL DAMAGE COVERAGE, C. Limits of Insurance, 1.b. is deleted in its entirety and replaced by the following:

b. The most we will pay for all "loss" to audio, visual or data electronic equipment and any accessories used with this equipment as a result of any one "accident" is the lesser of:

(1) The actual cash value of the damaged or stolen property as of the time of the "accident";

(2) The cost of repairing or replacing the damaged or stolen property with other property of like kind and quality; or

(3) $2,500.

Provided the equipment, at the time of the "loss" is:

(1) Permanently installed in or upon the covered "auto" in a housing, opening or other location that is not normally used by the "auto" manufacturer for the installation of such equipment;

(2) Removable from a permanently installed housing unit as described in Paragraph **(1)** above; or

(3) An integral part of such equipment.

F. Pollution Liability Broadened Coverage for Covered Autos

1. Coverage

a. SECTION II - COVERED AUTOS LIABILITY COVERAGE is changed as follows:

(1) Paragraph **a.** of the "Pollutant" Exclusion **(SECTION II - COVERED AUTOS LIABILITY COVERAGE, B. Exclusions)** applies only to liability assumed under a contract or agreement.

(2) With respect to the coverage afforded by Paragraph **a.(1)** above, Exclusion **B.6.** Care, Custody, or Control does not apply.

2. Limit of Insurance

a. The Per "Accident" Limit is $25,000. The Per "Accident" Limit is the most we will pay for the total of all damages and "covered pollution cost or expense" resulting from any one "accident" covered by this endorsement.

Subject to the limit for Pollution Liability Broadened Coverage, the most we will pay for all "bodily injury", "property damage" and "covered pollution cost or expense" combined, resulting from any one "accident", is the Limit of Insurance for Liability Coverage shown in the Declarations.

b. The Aggregate Limit is $25,000. The Aggregate Limit is the most we will pay for the sum of all damages and "covered pollution cost or expense" involving insurance provided by this endorsement. The Aggregate Limit applies separately to each consecutive annual period and to any remaining period of less than 12 months, starting with the beginning of the Policy Period shown in the Declarations, unless the Policy Period is extended after issuance for an additional period of less than 12 months. In that case, the additional period will be deemed part of the last preceding period for purposes of determining the Aggregate Limit.

3. Property Damage Liability Deductible

The "Property Damage" and "Covered Pollution Cost or Expense" Liability Coverage Deductible is $500. The damages that would otherwise be payable under **SECTION II - COVERED AUTOS LIABILITY COVERAGE** for "property damage" and "covered pollution cost or expense" caused by any one "accident" will be reduced by the "Property Damage" and "Covered Pollution Cost or Expense" Liability Coverage Deductible prior to the application of the Limit of Insurance provision.

4. Our Right to Reimbursement

To settle any claim or "suit" we will pay all or any part of any deductible shown in this endorsement. You must reimburse us for the deductible or the part of any deductible we paid.

Includes copyrighted material of ISO Properties, Inc., with its permission.

5. **Definitions**

SECTION V - DEFINITIONS, D. "covered pollution cost or expense" is deleted in its entirety and replaced by the following:

D. "Covered pollution cost or expense" means any cost or expense arising out of:

1. Any request, demand, order or statutory or regulatory requirement that any "insured" or others test for, monitor, clean up, remove, contain, treat, detoxify or neutralize, or in any way respond to, or assess the effects of "pollutants"; or

2. Any claim or "suit" by or on behalf of a governmental authority for damages because of testing for, monitoring, cleaning up, removing, containing, treating, detoxifying or neutralizing, or in any way responding to or assessing the effects of "pollutants".

"Covered pollution cost or expense" does not include any cost or expense arising out of the actual, alleged or threatened discharge, dispersal, seepage, migration, release, escape or emission of "pollutants":

a. Before the "pollutants" or any property in which the "pollutants" are contained are moved from the covered "auto" to the place where they are finally delivered, disposed of or abandoned by the "insured".

b. After the "pollutants" or any property in which the "pollutants" are contained are moved from the covered "auto" to the place where they are finally delivered, disposed of or abandoned by the "insured".

Paragraphs **a.** and **b.** above do not apply to "accidents" that occur away from premises owned by or rented to an "insured" with respect to "pollutants" not in or upon a covered "auto", if:

(1) The "pollutants" or any property in which the "pollutants" are contained are upset, overturned or damaged as a result of the maintenance or use of a covered "auto"; and

(2) The discharge, dispersal, seepage, migration, release, escape or emission of the "pollutants" is caused directly by such upset, overturn or damage.

G. Who is an Insured - Amended

SECTION II - COVERED AUTOS LIABILITY COVERAGE, A. Coverage, 1. Who is an Insured is amended by adding the following:

The following are "insureds":

1. Any subsidiary which is a legally incorporated entity of which you own a financial interest of more than 50% of the voting stock on the effective date of this coverage form.

However, the insurance afforded by this provision does not apply to any subsidiary that is an "insured" under any other automobile liability policy, or would be an "insured" under such policy but for termination of such policy or the exhaustion of such policy's limits of insurance.

2. Any organization that is newly acquired or formed by you and over which you maintain majority ownership. The insurance provided by this provision:

a. Is effective on the date of acquisition or formation, and is afforded for 180 days after such date;

b. Does not apply to "bodily injury" or "property damage" resulting from an "accident" that occurred before you acquired or formed the organization;

c. Does not apply to any newly acquired or formed organization that is a joint venture or partnership; and

d. Does not apply to an insured under any other automobile liability policy, or would be an insured under such a policy but for the termination of such policy or the exhaustion of such policy's limits of insurance.

3. Any of your "employees" while using a covered "auto" in your business or your personal affairs, provided you do not own, hire or borrow that "auto".

H. Liability Coverage Extensions - Supplementary Payments - Higher Limits

SECTION II - COVERED AUTOS LIABILITY COVERAGE, A. Coverage, 2. Coverage Extensions, a. Supplementary Payments is amended by:

1. Replacing the $2,000 Limit of Insurance for bail bonds with $4,000 in **(2)**; and

Includes copyrighted material of ISO Properties, Inc., with its permission.

2. Replacing the $250 Limit of Insurance for reasonable expenses with $500 in **(4)**.

I. Amended Fellow Employee Exclusion

SECTION II - COVERED AUTOS LIABILITY COVERAGE, B. Exclusions, 5. Fellow Employee is modified as follows:

Exclusion **5. Fellow Employee** is deleted.

J. Hired Auto - Physical Damage

If hired "autos" are covered "autos" for Liability Coverage, then Comprehensive and Collision Physical Damage Coverages as provided under **SECTION III - PHYSICAL DAMAGE COVERAGE** of this Coverage Part are extended to "autos" you hire, subject to the following:

1. The most we will pay for "loss" to any hired "auto" is $50,000 or the actual cash value or cost to repair or replace, whichever is the least, minus a deductible.
2. The deductible will be equal to the largest deductible applicable to any owned "auto" for that coverage, or $1,000, whichever is less.
3. Hired Auto - Physical Damage coverage is excess over any other collectible insurance.
4. Subject to the above limit, deductible, and excess provisions we will provide coverage equal to the broadest coverage applicable to any covered "auto" you own under this policy.

Coverage includes loss of use of that hired auto, provided it results from an "accident" for which you are legally liable and as a result of which a monetary loss is sustained by the leasing or rental concern. The most we will pay for any one "accident" is $3,000.

If a limit for Hired Auto - Physical Damage is shown in the Schedule, then that limit replaces, and is not added to, the $50,000 limit indicated above and the deductibles shown in the Schedule are applicable.

K. Rental Reimbursement

SECTION III - PHYSICAL DAMAGE COVERAGE is amended by adding the following:

1. We will pay for rental reimbursement expenses incurred by you for the rental of an "auto" because of a "loss" to a covered "auto". Payment applies in addition to the otherwise applicable amount of each coverage you have on a covered "auto". No deductible applies to this coverage.
2. We will pay only for those expenses incurred during the policy period beginning 24 hours after the "loss" and ending, regardless of the policy's expiration, with the lesser of the following number of days:
   a. The number of days reasonably required to repair the covered "auto". If "loss" is caused by theft, this number of days is added to the number of days it takes to locate the covered "auto" and return it to you; or
   b. 30 days.
3. Our payment is limited to the lesser of the following amounts:
   a. Necessary and actual expenses incurred; or
   b. $50 per day.
4. This coverage does not apply while there are spare or reserve "autos" available to you for your operations.
5. We will pay under this coverage only that amount of your rental reimbursement expenses which is not already provided for under **SECTION III - PHYSICAL DAMAGE COVERAGE, A. Coverage, 4. Coverage Extensions.**

L. Transportation Expense - Higher Limits

SECTION III - PHYSICAL DAMAGE COVERAGE, A. Coverage, 4. Coverage Extensions is amended by replacing $30 per day with $50 per day, and $900 maximum with $1,500 maximum in **Extension a. Transportation Expenses.**

M. Airbag Coverage

SECTION III - PHYSICAL DAMAGE COVERAGE, B. Exclusions, 3.a. is amended by adding the following:

However, the mechanical and electrical breakdown portion of this exclusion does not apply to the accidental discharge of an airbag. This coverage for airbags is excess over any other collectible insurance or warranty.

N. Loan or Lease Gap Coverage

1. **SECTION III - PHYSICAL DAMAGE COVERAGE, C. Limits of Insurance** is deleted in its entirety and replaced by the following, but only for private passenger type "autos" with an original loan or lease, and only in the event of a "total loss" to such a private passenger type "auto":
   a. The most we will pay for "loss" in any one "accident" is the greater of:
      (1) The amount due under the terms of the lease or loan to which

Includes copyrighted material of ISO Properties, Inc., with its permission.

your covered private passenger type "auto" is subject, but will not include:

(a) Overdue lease or loan payments;

(b) Financial penalties imposed under the lease due to high mileage, excessive use or abnormal wear and tear;

(c) Security deposits not refunded by the lessor;

(d) Costs for extended warranties, Credit Life Insurance, Health, Accident or Disability Insurance purchased with the loan or lease; and

(e) Carry-over balances from previous loans or leases, or

(2) Actual cash value of the stolen or damaged property.

b. An adjustment for depreciation and physical condition will be made in determining actual cash value at the time of "loss".

2. **SECTION V - DEFINITIONS** is amended by adding the following, but only for the purposes of this **Loan or Lease Gap Coverage**:

"Total loss" means a "loss" in which the cost of repairs plus the salvage value exceeds the actual cash value.

O. Glass Repair - Waiver of Deductible

SECTION III - PHYSICAL DAMAGE COVERAGE, D. Deductible is amended by adding the following:

No deductible applies to glass damage if the glass is repaired in a manner acceptable to us rather than replaced.

P. Duties in the Event of an Accident, Claim, Suit or Loss - Amended

SECTION IV - BUSINESS AUTO CONDITIONS, A. Loss Conditions, 2. Duties in the Event of Accident, Claim, Suit or Loss, a. is amended by adding the following:

This condition applies only when the "accident" or "loss" is known to:

1. You, if you are an individual;
2. A partner, if you are a partnership;
3. An executive officer or insurance manager, if you are a corporation; or
4. A member or manager, if you are a limited liability company.

Q. Unintentional Failure to Disclose Hazards

SECTION IV - BUSINESS AUTO CONDITIONS, B. General Conditions, 2. Concealment, Misrepresentation or Fraud is amended by adding the following:

However, if you unintentionally fail to disclose any hazards existing on the effective date of this Coverage Form, we will not deny coverage under this Coverage Form because of such failure.

R. Mental Anguish Resulting from Bodily Injury

SECTION V - DEFINITIONS, C. "Bodily injury" is deleted in its entirety and replaced by the following:

"Bodily injury" means bodily injury, sickness or disease sustained by a person, including mental anguish and death sustained by the same person that results from such bodily injury, sickness or disease. "Bodily injury" does not include mental anguish or death that does not result from bodily injury, sickness or disease.

S. Coverage for Certain Operations in Connection with Railroads

With respect to the use of a covered "auto" in operations for or affecting a railroad:

1. **SECTION V - DEFINITIONS, H.** "Insured contract", **3.** is deleted in its entirety and replaced by the following:

   3. An easement or license agreement;

2. **SECTION V - DEFINITIONS, H.** "Insured contract", **6.a.** is deleted.

Includes copyrighted material of ISO Properties, Inc., with its permission.

THE CINCINNATI INSURANCE COMPANY

CINCINNATI, OHIO

BUSINESS AUTO COVERAGE PART DECLARATIONS

ITEM ONE

Attached to and forming part of POLICY NUMBER: EBA 075 41 79

Named Insured is the same as it appears in the Common Policy Declarations.

ITEM TWO **SCHEDULE OF COVERAGES AND COVERED AUTOS**

This coverage part provides only those coverages where a premium or "incl" is shown in the premium column below. The limit of Insurance for each coverage listed is subject to all applicable policy provisions. Each of these coverages will apply only to those "autos" shown as covered "autos". "Autos" are shown as covered "autos" for a particular coverage by the entry of one or more of the symbols from the COVERED AUTO Section of the Business Auto Coverage Form next to the name of the coverage.

COVERAGES	COVERED AUTOS (Entry of one or more of the symbols from the COVERED AUTOS Section of the Business Auto Coverage Form shows which autos are covered autos)	LIMIT THE MOST WE WILL PAY FOR ANY ONE ACCIDENT OR LOSS	PREMIUM
LIABILITY	1	$ 1,000,000	INCL
PERSONAL INJURY PROTECTION (or equivalent No-fault coverage)		Separately stated in each P.I.P. endorsement minus $ Ded.	
ADDED PERSONAL INJURY PROTECTION (or equivalent added No-fault coverage)		Separately stated in each added P.I.P. endorsement	
PROPERTY PROTECTION INSURANCE (Michigan only)		Separately stated in each P. P.I. endorsement minus $ Ded for each accident	
AUTO. MEDICAL PAYMENTS	2	$ 5,000	INCL
UNINSURED MOTORISTS	2	$ SEE AA4183	INCL
UNDERINSURED MOTORISTS (When not included in Uninsured Motorists Coverage)	2	$ SEE AA4183	INCL
PHYSICAL DAMAGE COMPREHENSIVE COVERAGE	7	Actual cash value or cost of repair, Whichever is less minus $ SEE AA4183 Ded. For each covered auto. But no Deductible applies to loss caused by Fire or lightning. See Item Three for hired or borrowed "autos"	INCL
PHYSICAL DAMAGE SPECIFIED CAUSES OF LOSS COVERAGE		Actual cash value or cost of repair, Whichever is less minus $ Ded. For Each covered auto. For loss caused by mischief or vandalism. See Item Three for hired or borrowed "autos"	
PHYSICAL DAMAGE COLLISION COVERAGE	7	Actual cash value or cost of repair, Whichever is less minus $ SEE AA4183 Ded for each covered auto. See Item Three for hired or borrowed "autos".	INCL
PHYSICAL DAMAGE INSURANCE TOWING AND LABOR		$ for each disablement of a private passenger auto	
PREMIUM FOR ENDORSEMENTS			
		*ESTIMATED TOTAL PREMIUM	INCL

FORMS AND ENDORSEMENTS CONTAINED IN THIS COVERAGE PART AT ITS INCEPTION:

AA4183 02/06 AUTOMOBILE SCHEDULE
AA101 01/24 BUSINESS AUTO COVERAGE FORM
AA305 03/06 POLICY CHANGES - DRIVER EXCLUSION
AA2009 01/17 CHANGES - TOWING AND LABOR

Includes copyrighted material of Insurance Services Office, Inc., with its permission.

FORMS AND ENDORSEMENTS CONTAINED IN THIS COVERAGE PART AT ITS INCEPTION:

AA296	07/12	CHANGES - AUDIO, VISUAL AND DATA ELECTRONIC EQUIPMENT COVERAGE
AA332	01/24	PUBLIC OR LIVERY PASSENGER CONVEYANCE EXCLUSION
AA4092NE	07/02	NEBRASKA UNINSURED AND UNDERINSURED MOTORISTS COVERAGE
AA4263	04/10	OFFICE OF FOREIGN ASSETS CONTROL (OFAC) COMPLIANCE ENDORSEMENT
AA4307NE	11/13	NEBRASKA CHANGES
AA4401	01/24	BUSINESS AUTO AMENDATORY ENDORSEMENT
AP401NE	05/13	UNINSURED AND UNDERINSURED MOTORISTS PROTECTION OPTION SELECTION FORM-NEBRASKA
CA0221	12/17	NEBRASKA CHANGES - CANCELLATION
AA261NE	07/14	NEBRASKA AUTO MEDICAL PAYMENTS COVERAGE
AA292	01/24	CINCIPLUS® BUSINESS AUTO XC+® (EXPANDED COVERAGE PLUS) ENDORSEMENT, WITH POLLUTION LIABILITY FOR COVERED AUTOS

* This policy may be subject to final audit

Includes copyrighted material of Insurance Services Office, Inc., with its permission.

WAIVER OF OUR RIGHT TO RECOVER FROM OTHERS ENDORSEMENT

We have the right to recover our payments from anyone liable for an injury covered by this policy. We will not enforce our right against the person or organization named in the Schedule.

This agreement shall not operate directly or indirectly to benefit anyone not named in the Schedule.

Schedule

Blanket Waiver of Subrogation

If you are required by a written contract or agreement, which is executed before a loss, to waive your rights of recovery from others, we agree to waive our rights of recovery.

This waiver of rights applies to any person or organization for whom the Named Insured has agreed by written contract to furnish this waiver, but shall not be construed to be a waiver with respect to any other operations in which the Insured has no contractual interest.

This endorsement changes the policy to which it is attached and is effective on the date issued unless otherwise stated.

(The information below is required only when this endorsement is issued subsequent to preparation of the policy.)

Endorsement Effective 08-01-2025 Policy No.EWC 075 41 80-00 Endorsement No.

Insured ARROWHEAD DEVELOPMENT LLC

Insurance Company THE CINCINNATI CASUALTY COMPANY Premium $INCL

Countersigned by _____

WC 00 03 13

© 1983 National Council on Compensation Insurance.

WH 26-11 Introduce: 4-23-26

RESOLUTION NO.

BE IT RESOLVED by the Board of Representatives of the West Haymarket Joint Public Agency:

That the attached Contract between the West Haymarket Joint Public Agency and Cerris Systems North Central, Inc. fka MMC Mechanical Contractors dba Cerris Systems North Central, Inc., for the Amtrak Rooftop Unit 1 Replacement, for a total amount not to exceed $76,377.00, pursuant to Bid No. 26-051, is hereby approved and the Chairperson of the West Haymarket Joint Public Agency Board of Representatives is hereby authorized to execute said Contract and amendments necessary, if any, to complete the project.

Adopted this _____ day of April, 2026.

Introduced by:

_____

Approved as to Form & Legality:

West Haymarket Joint Public Agency
Board of Representatives

_____
Legal Counsel for
West Haymarket Joint Public Agency

_____
Leirion Gaylor Baird

_____
Tim Clare

_____
Tom Beckius

CONTRACT DOCUMENTS

West Haymarket Joint Public Agency
Lincoln, Nebraska

Amtrak Rooftop Unit 1 Replacement
Bid No. 26-051

Cerris Systems North Central, Inc.
fka MMC Mechanical Contractors
dba Cerris Systems North Central, Inc.
9751 S. 142nd Street
Omaha, NE 68138
402-861-0681 X0

West Haymarket Joint Public Agency
Lincoln, Nebraska
Contract Agreement

THIS CONTRACT, made and entered into by and between **Cerris Systems North Central, Inc. fka MMC Mechanical Contractors dba Cerris Systems North Central, Inc.**, hereinafter called the Contractor, and West Haymarket Joint Public Agency, Lincoln, Nebraska, hereinafter called JPA.

WHEREAS, JPA has caused to be prepared, in accordance with law, Specifications, Plans, and other Contract Documents for the Work herein described, and has approved and adopted said documents and has caused to be published an advertisement for and in connection with said Work, to-wit:

Amtrak Rooftop Unit 1 Replacement, Bid No. 26-051

and,

WHEREAS, the Contractor, in response to such advertisement, has submitted to JPA, in the manner and at the time specified, a sealed Proposal/Supplier Response in accordance with the terms of said advertisement; and,

WHEREAS, JPA, in the manner prescribed by law has examined and canvassed the Proposals/Supplier Responses submitted in response to such advertisement, and as a result of such canvass has determined and declared the Contractor to be the lowest responsible bidder for the said Work for the sum or sums named in the Contractor's Proposal/Supplier Response, a copy thereof being attached to and made a part of this Contract;

NOW, THEREFORE, in consideration of the sums to be paid to the Contractor and the mutual covenants herein contained, the Contractor and JPA have agreed and hereby agree as follows:

1. The Contractor agrees to (a) furnish all tools, equipment, supplies, superintendence, transportation, and other construction accessories, services, and facilities; (b) furnish all materials, supplies, and equipment specified to be incorporated into and form a permanent part of the complete work; (c) provide and perform all necessary labor in a substantial and workmanlike manner and in accordance with the provisions of the Contract Documents; and (d) execute, construct, and complete all Work included in and covered by JPA's award of this Contract to the Contractor, such award being based on the acceptance by JPA of the Contractor's Proposal, or part thereof, as follows:

Agreement to Supplier's Full Proposal

2. The JPA agrees to pay to the Contractor for the performance of the Work embraced in this Contract, the Contractor agrees to accept as full compensation therefore, the following sums and prices for all Work covered by and included in the Contract award and designated above, payment thereof to be made in the manner provided by JPA:

   The JPA will pay for products/services, according to the Line Item pricing as listed in Contractors Proposal/Supplier Response, a copy thereof being attached to and made a part of this Contract for a total of $76,377.00.

3. EQUAL EMPLOYMENT OPPORTUNITY: In connection with the carrying out of this project, the Contractor shall not discriminate against any employee, applicant for employment, or any other person because of race, color, religion, sex, national origin, ancestry, disability, age or marital status. The Contractor will take affirmative action to ensure that applicants are employed, and that employees are treated during employment, without regard to their race, color, religion, sex, national origin, ancestry, disability, age or marital status. Such action shall include, but not be limited to, the following:

employment, upgrading, demotion or transfer; recruitment or recruitment advertising; layoff or termination; rates of pay or other compensation; and selection for training, including apprenticeship.

4. E-VERIFY: In accordance with Neb. Rev. Stat. 4-108 through 4-114, the contractor agrees to register with and use a federal immigration verification system, to determine the work eligibility status of new employees performing services within the state of Nebraska. A federal immigration verification system means the electronic verification of the work authorization program of the Illegal Immigration Reform and Immigrant Responsibility Act of 1996, 8 U.S.C. 1324 a, otherwise known as the E-Verify Program, or an equivalent federal program designated by the United States Department of Homeland Security or other federal agency authorized to verify the work eligibility status of a newly hired employee pursuant to the Immigration Reform and Control Act of 1986. The Contractor shall not discriminate against any employee or applicant for employment to be employed in the performance of this section pursuant to the requirements of state law and 8 U.S.C.A 1324b. The contractor shall require any subcontractor to comply with the provisions of this section.

5. GUARANTEE: A performance and payment bond in the full amount of the contract shall be required for all construction contracts. These bonds shall remain in effect during the guarantee period as stated in the specifications. Once the project is completed, the Contractor may submit a maintenance bond in place of the performance bond.

6a. TERMINATION FOR CAUSE

a) JPA may terminate the Contract if the Contractor:
   1. Refuses or fails to supply enough properly skilled workers or proper materials;
   2. Fails to make payment to Subcontractors for materials or labor in accordance with the respective agreements between the Contractor and the Subcontractors;
   3. Disregards laws, ordinances, or rules, regulations or orders of a public authority having jurisdiction; or
   4. Otherwise commits a substantial breach of any provision of the Contract Documents.

b) When any of the above reasons exist, JPA without prejudice to any other rights or remedies of JPA may (after giving the Contractor and the Contractor's surety, if any, seven days' written notice) terminate employment of the Contractor. In addition JPA may (subject to any prior rights of the surety):
   1. Take possession of the site and of all materials, equipment, tools, and construction equipment and machinery thereon owned by the Contractor;
   2. Accept assignment of subcontracts; and
   3. Finish the Work by whatever reasonable method JPA may deem expedient.

c) If the Contract is terminated by JPA as provided in this section, Contractor shall not be entitled to receive any further payment until the expiration of 35 days after Final Completion and acceptance of all Work by JPA.

d) If the unpaid balance of the Contract Sum exceeds the cost of completing the Work, including all additional costs and expenses made necessary thereby, including costs for JPA staff time, plus all losses sustained, including any liquidated damages provided under the Contract Documents, such excess shall be paid to Contractor. If such costs, expenses, losses, and liquidated damages exceed the unpaid balance of the Contract Sum, Contractor shall pay such excess to JPA.

e) If, after termination of the Contractor's right to proceed, it is determined that the Contractor was not in default, or that the delay was excusable, the rights and obligations of the parties will be the same as if the termination has been issued for the convenience of JPA.

f) No termination or action taken by JPA after termination shall prejudice any other rights or remedies of JPA provided by law or by the Contract Documents upon such termination; and JPA may proceed against Contractor to recover all losses suffered by JPA.

6b. TERMINATION BY JPA FOR CONVENIENCE

a) JPA may at its option, terminate this Contract in whole or in part at any time without cause by written notice thereof to the Contractor.

b) Upon any such termination, the Contractor agrees to waive any claims for damages, including loss of anticipated profits, on account thereof, and as the sole right and remedy of the Contractor, JPA shall pay Contractor in accordance with this Paragraph. The provisions of the Contract which by their nature survive final acceptance of the Work, shall remain in full force and effect after such termination to the extent provided in such provisions.

c) Upon receipt of any such notice of termination, the Contractor shall, unless the Notice directs otherwise, immediately:
   1. Discontinue the Work to the extent specified by JPA;
   2. Place no further orders or subcontracts for materials, equipment, services or facilities, except as may be necessary for completion of that portion of the Work, if any, JPA has directed not to be discontinued;
   3. Promptly make every reasonable effort to procure cancellation upon satisfactory terms as determined by JPA of all orders and subcontracts not related to that portion of the Work, if any, JPA has directed not to be discontinued;
   4. Do only such other activity as may be necessary to preserve and protect work already in progress and to protect materials and plants and equipment on the Project Site or in transit thereto.

d) Upon such termination, the obligations of the Contract shall continue as to portions of the Work already performed and as to bona fide obligations the Contractor assumed prior to the date of termination.

e) Upon termination, JPA shall pay the Contractor the full cost of all Work properly done by the Contractor to the date of termination not previously paid for by JPA. If at the date of such termination the Contractor has properly prepared or fabricated off site any goods for subsequent incorporation in the Work, JPA may direct the Contractor to deliver such goods to the Site or to such other place as JPA may reasonably determine, whereupon JPA shall pay to the Contractor the cost for such goods and materials.

f) Upon such termination, JPA shall pay to Contractor the sum of the following:
   1. The amount of the Contract Sum allocable to the portion of the Work properly performed by Contractor as of the date of termination, less sums previously paid to Contractor.
   2. Previously unpaid costs of any items delivered to the Project site which were fabricated for subsequent incorporation in the Work.
   3. Any proven losses with respect to materials and equipment directly resulting from such termination.
   4. Reasonable demobilization costs.

g) The above payment shall be the sole and exclusive remedy to which Contractor is entitled in the event of termination of the Contract by JPA pursuant to this provision; and Contractor will be entitled to no other compensation or damages and expressly waives same.

7. INDEPENDENT CONTRACTOR: It is the express intent of the parties that this contract shall not create an employer-employee relationship. Employees of the Contractor shall not be deemed to be employees of JPA and employees of JPA shall not be deemed to be employees of the Contractor. The Contractor and JPA shall be responsible to their respective employees for all salary and benefits. Neither the Contractor's employees nor JPA's employees shall be entitled to any salary, wages, or benefits from the other party, including but not limited to overtime, vacation, retirement benefits, workers' compensation, sick leave or injury leave. Contractor shall also be responsible for maintaining workers' compensation insurance, unemployment insurance for its employees, and for payment of all federal, state, local and any other payroll taxes with respect to its employees' compensation.

8. FOREIGN ADVERSARY CONTRACTING PROHIBITION ACT CERTIFICATION: In accordance with the Foreign Adversary Contracting Prohibition Act, Neb. Rev. Stat. §73-901 to §73-907, a public entity shall require a company that submits a bid, or proposal, or enters into any contract or contract renewal with any public entity, to certify that the company is not a scrutinized company and will not subcontract with any scrutinized company for any aspect of performance of the contemplated contract; and that any

products or services to be provided do not originate with a scrutinized company. As such the Contractor agrees to do one of the following:

(A) If the Contractor is providing technology related goods or services under the Act, Contractor agrees to complete and sign a Certification Form as provided by the JPA certifying that the Contractor is not a scrutinized company and attach it to the Agreement; or

(B) If the Contractor is not providing technology related goods or services under the Act, Contractor agrees to complete and sign a Certification Form as provided by the JPA certifying that the Contractor is not providing such services and is not subject to the Act; or

(C) If the Contractor is providing technology related goods under the Act, and Contractor is a scrutinized company that qualifies under Neb. Rev. Stat. §73-906(2) as an exception for the provision of manufactured goods only, Contractor agrees to complete and sign a Certification Form as provided by the JPA certifying that the contractor is a scrutinized company that meets the exception provided under the Act.

9. PERIOD OF PERFORMANCE: The Contract shall become effective upon execution by both parties. Delivery of equipment will be within one hundred fifty-four (154) days of execution date of Contract. Project completion shall be sixty (60) days from delivery date of equipment.

10. The Contract Documents comprise the Contract, and consist of the following:

1. Contract Terms
2. Performance and Payment Bonds
3. Supplier Response
4. Specifications
5. Photo – Existing Controller
6. Employee Classification Act, Executive Order 83319
7. Employee Classification Act Affidavit
8. Foreign Adversary Contracting Prohibition Act Certification Form
9. Certified Statement
10. Insurance Requirements
11. Certificate of Insurance and Endorsements
12. Instructions to Bidders
13. Sales Tax Exemption Forms 13 & 17

* If the project includes paving, water, sewer, sidewalk, lighting or traffic signal work, JPA Standard Specifications for Municipal Construction will apply, which are on file in the office of JPA Clerk. Copies may be obtained at the Office of the City Engineer.

These Contract Agreements, together with the other Contract Documents herein above mentioned, form this Contract, and they are as fully a part of the Contract as if hereto attached or herein repeated.

The Contractor and JPA hereby agree that all the terms and conditions of this Contract shall by these presents be binding upon themselves, and their heirs, administrators, executors, legal and personal representatives, successors, and assigns.

Vendor Signature Page

CONTRACT
Amtrak Rooftop Unit 1 Replacement
Bid No. 26-051
West Haymarket Joint Public Agency
Cerris Systems North Central, Inc. fka MMC Mechanical Contractors
dba Cerris Systems North Central, Inc.

EXECUTION BY CONTRACTOR

IF A CORPORATION:
Attest:

Charity Hansen
Secretary

Seal

Cerris Systems North Central, Inc.
Name of Corporation

4833 N 32nd St. Lincoln NE 68504
Address

By: _____
Duly Authorized Official GREGG HUNTER

VP
Legal Title of Official

IF OTHER TYPE OF ORGANIZATION:

Name of Organization

Type of Organization

Address

By: _____
Member

By: _____
Member

IF AN INDIVIDUAL:

Name

Address

Signature

West Haymarket Joint Public Agency Signature Page

CONTRACT
Amtrak Rooftop Unit 1 Replacement
Bid No. 26-051
West Haymarket Joint Public Agency
Cerris Systems North Central, Inc. fka MMC Mechanical Contractors
dba Cerris Systems North Central, Inc.

EXECUTION BY THE WEST HAYMARKET JOINT PUBLIC AGENCY

West Haymarket Joint Public Agency

_____
Leirion Gaylor Baird, Mayor
Chairperson of the West Haymarket Joint Public Agency
Board of Representatives

Approved Order No._____

dated _____

PAYMENT BOND

Bond No. K42235957

Contractor	Surety
Name: **Cerris Systems North Central, Inc fka MMC Mechanical Contractors dba Cerris Systems North Central, Inc.** Address *(principal place of business)*: **9751 S. 142nd Street, Omaha, NE 68138**	Name: Federal Insurance Company Address *(principal place of business)*: 202B Hall's Mill Road, Whitehouse Station, NJ 08889 (215) 640-1000
Owner	**Contract**
Name: **West Haymarket Joint Public Agency** Mailing address *(principal place of business)*: **555 S. 10th Street Lincoln, NE 68508**	Description *(name and location)*: **Amtrak Rooftop Unit 1 Replacement, Bid No. 26-051** Contract Price: **$76,377.00** Effective Date of Contract: **Execution Date of Contract**

Bond

Bond Amount: **$76,377.00**

Date of Bond: **Execution Date of Contract**

(Date of Bond cannot be earlier than Effective Date of Contract)

Modifications to this Bond form:

☒ None ☐ See Paragraph 18

Surety and Contractor, intending to be legally bound hereby, subject to the terms set forth in this Payment Bond, do each cause this Payment Bond to be duly executed by an authorized officer, agent, or representative.

Contractor as Principal	Surety
Cerris Systems North Central, Inc. fka MMC Mechanical Contractors dba Cerris Systems North Central, Inc.	Federal Insurance Company
(Full formal name of Contractor)	*(Full formal name of Surety) (corporate seal)*
By: _____ *(Signature)*	By: _____ *(Signature)(Attach Power of Attorney)*
Name: GREG HUNTER *(Printed or typed)*	Name: Rebecca S. Leal *(Printed or typed)*
Title: VP	Title: Attorney-in-Fact
Attest: _____ *(Signature)*	Attest: _____ *(Signature)*
Name: Justin Romans *(Printed or typed)*	Name: Amy S. Fulton *(Printed or typed)*
Title: Service General Manager	Title: Witness

Notes: (1) Provide supplemental execution by any additional parties, such as joint venturers. (2) Any singular reference to Contractor, Surety, Owner, or other party is considered plural where applicable.

CHUBB

Power of Attorney

Federal Insurance Company | Vigilant Insurance Company | Pacific Indemnity Company
Westchester Fire Insurance Company | ACE American Insurance Company

Know All by These Presents, that **FEDERAL INSURANCE COMPANY**, an Indiana corporation, **VIGILANT INSURANCE COMPANY**, a New York corporation, **PACIFIC INDEMNITY COMPANY**, a Delaware corporation, **WESTCHESTER FIRE INSURANCE COMPANY** and **ACE AMERICAN INSURANCE COMPANY** corporations of the Commonwealth of Pennsylvania, do each hereby constitute and appoint Christy M. Braile, Danielle R. Capps, Jeffrey C. Carey, Mary T. Flanigan, Tahitia M. Fry, C. Stephens Griggs, Erin C. Lavin, Veronica Lawver, Rebecca S. Leal, Kellie A. Meyer, Patrick T. Pribyl, Debra J. Scarborough, Lauren Scott, Hillary D. Shepard, Evan D. Sizemore, April M. Terbay, Kristin D. Thurber and Mariana Walker of Kansas City, Missouri----------

each as their true and lawful Attorney-in-Fact to execute under such designation in their names and to affix their corporate seals to and deliver for and on their behalf as surety thereon or otherwise, bonds and undertakings and other writings obligatory in the nature thereof (other than bail bonds) given or executed in the course of business, and any instruments amending or altering the same, and consents to the modification or alteration of any instrument referred to in said bonds or obligations.

In **Witness Whereof,** said **FEDERAL INSURANCE COMPANY, VIGILANT INSURANCE COMPANY, PACIFIC INDEMNITY COMPANY, WESTCHESTER FIRE INSURANCE COMPANY** and **ACE AMERICAN INSURANCE COMPANY** have each executed and attested these presents and affixed their corporate seals on this 3rd day of **September, 2025.**

Rupert HD Swindells Assistant Secretary

Stephen M Haney Vice President

STATE OF NEW JERSEY
County of Hunterdon SS.

On this 3rd day of **September , 2025** before me, a Notary Public of New Jersey, personally came Rupert HD Swindells and Stephen M. Haney, to me known to be Assistant Secretary and Vice President, respectively, of FEDERAL INSURANCE COMPANY, VIGILANT INSURANCE COMPANY, PACIFIC INDEMNITY COMPANY, WESTCHESTER FIRE INSURANCE COMPANY and ACE AMERICAN INSURANCE COMPANY, the companies which executed the foregoing Power of Attorney, and the said Rupert HD Swindells and Stephen M. Haney, being by me duly sworn, severally and each for himself did depose and say that they are Assistant Secretary and Vice President, respectively, of FEDERAL INSURANCE COMPANY, VIGILANT INSURANCE COMPANY, PACIFIC INDEMNITY COMPANY, WESTCHESTER FIRE INSURANCE COMPANY and ACE AMERICAN INSURANCE COMPANY and know the corporate seals thereof, that the seals affixed to the foregoing Power of Attorney are such corporate seals and were thereto affixed by authority of said Companies; and that their signatures as such officers were duly affixed and subscribed by like authority.

Notarial Seal

Stacy J Loftin
NOTARY PUBLIC OF NEW JERSEY
No. 50175203
COMMISSION EXPIRES OCT 15, 2026

Notary Public

CERTIFICATION

Resolutions adopted by the Boards of Directors of FEDERAL INSURANCE COMPANY, VIGILANT INSURANCE COMPANY, and PACIFIC INDEMNITY COMPANY on August 30, 2016, WESTCHESTER FIRE INSURANCE COMPANY on December 11, 2006; and ACE AMERICAN INSURANCE COMPANY on March 20, 2009:

"RESOLVED, that the following authorizations relate to the execution, for and on behalf of the Company, of bonds, undertakings, recognizances, contracts and other written commitments of the Company entered into in the ordinary course of business (each a "Written Commitment"):

(1) Each of the Chairman, the President and the Vice Presidents of the Company is hereby authorized to execute any Written Commitment for and on behalf of the Company, under the seal of the Company or otherwise.

(2) Each duly appointed attorney-in-fact of the Company is hereby authorized to execute any Written Commitment for and on behalf of the Company, under the seal of the Company or otherwise, to the extent that such action is authorized by the grant of powers provided for in such person's written appointment as such attorney-in-fact.

(3) Each of the Chairman, the President and the Vice Presidents of the Company is hereby authorized, for and on behalf of the Company, to appoint in writing any person the attorney-in-fact of the Company with full power and authority to execute, for and on behalf of the Company, under the seal of the Company or otherwise, such Written Commitments of the Company as may be specified in such written appointment, which specification may be by general type or class of Written Commitments or by specification of one or more particular Written Commitments.

(4) Each of the Chairman, the President and the Vice Presidents of the Company is hereby authorized, for and on behalf of the Company, to delegate in writing to any other officer of the Company the authority to execute, for and on behalf of the Company, under the Company's seal or otherwise, such Written Commitments of the Company as are specified in such written delegation, which specification may be by general type or class of Written Commitments or by specification of one or more particular Written Commitments.

(5) The signature of any officer or other person executing any Written Commitment or appointment or delegation pursuant to this Resolution, and the seal of the Company, may be affixed by facsimile on such Written Commitment or written appointment or delegation.

FURTHER RESOLVED, that the foregoing Resolution shall not be deemed to be an exclusive statement of the powers and authority of officers, employees and other persons to act for and on behalf of the Company, and such Resolution shall not limit or otherwise affect the exercise of any such power or authority otherwise validly granted or vested."

I, Rupert HD Swindells, Assistant Secretary of FEDERAL INSURANCE COMPANY, VIGILANT INSURANCE COMPANY, PACIFIC INDEMNITY COMPANY, WESTCHESTER FIRE INSURANCE COMPANY and ACE AMERICAN INSURANCE COMPANY (the "Companies") do hereby certify that

(i) the foregoing Resolutions adopted by the Board of Directors of the Companies are true, correct and in full force and effect.
(ii) the foregoing Power of Attorney is true, correct and in full force and effect.

Given under my hand and seals of said Companies at Whitehouse Station, NJ, this

Rupert HD Swindells Assistant Secretary

IN THE EVENT YOU WISH TO VERIFY THE AUTHENTICITY OF THIS BOND OR NOTIFY US OF ANY OTHER MATTER, PLEASE CONTACT US AT:
Telephone (908) 903-3493 Fax (908) 903-3656 e-mail: surety@chubb.com

PERFORMANCE BOND

Bond No. K42235957

Contractor	Surety
Name: **Cerris Systems North Central, Inc fka MMC Mechanical Contractors dba Cerris Systems North Central, Inc.**	Name: Federal Insurance Company
Address *(principal place of business)*: **9751 S. 142nd Street, Omaha, NE 68138**	Address *(principal place of business)*: 202B Hall's Mill Road, Whitehouse Station, NJ 08889 (215) 640-1000
Owner	**Contract**
Name: **West Haymarket Joint Public Agency**	Description *(name and location)*: **Amtrak Rooftop Unit 1 Replacement, Bid No. 26-051**
Mailing address *(principal place of business)*: **555 S. 10th Street Lincoln, NE 68508**	Contract Price: **$76,377.00**
	Effective Date of Contract: **Execution Date of Contract**

Bond

Bond Amount: **$76,377.00**

Date of Bond: **Execution Date of Contract**

(Date of Bond cannot be earlier than Effective Date of Contract)

Modifications to this Bond form:

☒ None ☐ See Paragraph 16

Surety and Contractor, intending to be legally bound hereby, subject to the terms set forth in this Performance Bond, do each cause this Performance Bond to be duly executed by an authorized officer, agent, or representative.

Contractor as Principal	Surety
Cerris Systems North Central, Inc. fka MMC Mechanical Contractors dba Cerris Systems North Central, Inc.	Federal Insurance Company
(Full formal name of Contractor)	*(Full formal name of Surety) (corporate seal)*
By: *(Signature)*	By: *(Signature)(Attach Power of Attorney)*
Name: GREG HUNTER *(Printed or typed)*	Name: Rebecca S. Leal *(Printed or typed)*
Title: VP	Title: Attorney-in-Fact
Attest: *(Signature)*	Attest: *(Signature)*
Name: Justin Mommens *(Printed or typed)*	Name: Amy S. Fulton *(Printed or typed)*
Title: Service General Manager	Title: Witness

Notes: (1) Provide supplemental execution by any additional parties, such as joint venturers. (2) Any singular reference to Contractor, Surety, Owner, or other party is considered plural where applicable.

CHUBB

Power of Attorney

Federal Insurance Company | Vigilant Insurance Company | Pacific Indemnity Company
Westchester Fire Insurance Company | ACE American Insurance Company

Know All by These Presents, that **FEDERAL INSURANCE COMPANY,** an Indiana corporation, **VIGILANT INSURANCE COMPANY,** a New York corporation, **PACIFIC INDEMNITY COMPANY,** a Delaware corporation, **WESTCHESTER FIRE INSURANCE COMPANY** and **ACE AMERICAN INSURANCE COMPANY** corporations of the Commonwealth of Pennsylvania, do each hereby constitute and appoint Christy M. Braile, Danielle R. Capps, Jeffrey C. Carey, Mary T. Flanigan, Tahitia M. Fry, C. Stephens Griggs, Erin C. Lavin, Veronica Lawver, Rebecca S. Leal, Kellie A. Meyer, Patrick T. Pribyl, Debra J. Scarborough, Lauren Scott, Hillary D. Shepard, Evan D. Sizemore, April M. Terbay, Kristin D. Thurber and Mariana Walker of Kansas City, Missouri----------

each as their true and lawful Attorney-in-Fact to execute under such designation in their names and to affix their corporate seals to and deliver for and on their behalf as surety thereon or otherwise, bonds and undertakings and other writings obligatory in the nature thereof (other than bail bonds) given or executed in the course of business, and any instruments amending or altering the same, and consents to the modification or alteration of any instrument referred to in said bonds or obligations.

In Witness Whereof, said **FEDERAL INSURANCE COMPANY, VIGILANT INSURANCE COMPANY, PACIFIC INDEMNITY COMPANY, WESTCHESTER FIRE INSURANCE COMPANY** and **ACE AMERICAN INSURANCE COMPANY** have each executed and attested these presents and affixed their corporate seals on this 3rd day of **September, 2025.**

Rupert HD Swindells, Assistant Secretary

Stephen M Haney, Vice President

STATE OF NEW JERSEY
County of Hunterdon ss.

On this 3rd day of **September , 2025** before me, a Notary Public of New Jersey, personally came Rupert HD Swindells and Stephen M. Haney, to me known to be Assistant Secretary and Vice President, respectively, of FEDERAL INSURANCE COMPANY, VIGILANT INSURANCE COMPANY, PACIFIC INDEMNITY COMPANY, WESTCHESTER FIRE INSURANCE COMPANY and ACE AMERICAN INSURANCE COMPANY, the companies which executed the foregoing Power of Attorney, and the said Rupert HD Swindells and Stephen M. Haney, being by me duly sworn, severally and each for himself did depose and say that they are Assistant Secretary and Vice President, respectively, of FEDERAL INSURANCE COMPANY, VIGILANT INSURANCE COMPANY, PACIFIC INDEMNITY COMPANY, WESTCHESTER FIRE INSURANCE COMPANY and ACE AMERICAN INSURANCE COMPANY and know the corporate seals thereof, that the seals affixed to the foregoing Power of Attorney are such corporate seals and were thereto affixed by authority of said Companies; and that their signatures as such officers were duly affixed and subscribed by like authority.

Notarial Seal

Stacy J Loftin
NOTARY PUBLIC OF NEW JERSEY
No. 50175208
COMMISSION EXPIRES OCT 15, 2026

Notary Public

CERTIFICATION

Resolutions adopted by the Boards of Directors of FEDERAL INSURANCE COMPANY, VIGILANT INSURANCE COMPANY, and PACIFIC INDEMNITY COMPANY on August 30, 2016, WESTCHESTER FIRE INSURANCE COMPANY on December 11, 2006; and ACE AMERICAN INSURANCE COMPANY on March 20, 2009:

"RESOLVED, that the following authorizations relate to the execution, for and on behalf of the Company, of bonds, undertakings, recognizances, contracts and other written commitments of the Company entered into in the ordinary course of business (each a "Written Commitment"):

(1) Each of the Chairman, the President and the Vice Presidents of the Company is hereby authorized to execute any Written Commitment for and on behalf of the Company, under the seal of the Company or otherwise.

(2) Each duly appointed attorney-in-fact of the Company is hereby authorized to execute any Written Commitment for and on behalf of the Company, under the seal of the Company or otherwise, to the extent that such action is authorized by the grant of powers provided for in such person's written appointment as such attorney-in-fact.

(3) Each of the Chairman, the President and the Vice Presidents of the Company is hereby authorized, for and on behalf of the Company, to appoint in writing any person the attorney-in-fact of the Company with full power and authority to execute, for and on behalf of the Company, under the seal of the Company or otherwise, such Written Commitments of the Company as may be specified in such written appointment, which specification may be by general type or class of Written Commitments or by specification of one or more particular Written Commitments.

(4) Each of the Chairman, the President and the Vice Presidents of the Company is hereby authorized, for and on behalf of the Company, to delegate in writing to any other officer of the Company the authority to execute, for and on behalf of the Company, under the Company's seal or otherwise, such Written Commitments of the Company as are specified in such written delegation, which specification may be by general type or class of Written Commitments or by specification of one or more particular Written Commitments.

(5) The signature of any officer or other person executing any Written Commitment or appointment or delegation pursuant to this Resolution, and the seal of the Company, may be affixed by facsimile on such Written Commitment or written appointment or delegation.

FURTHER RESOLVED, that the foregoing Resolution shall not be deemed to be an exclusive statement of the powers and authority of officers, employees and other persons to act for and on behalf of the Company, and such Resolution shall not limit or otherwise affect the exercise of any such power or authority otherwise validly granted or vested."

I, Rupert HD Swindells, Assistant Secretary of FEDERAL INSURANCE COMPANY, VIGILANT INSURANCE COMPANY, PACIFIC INDEMNITY COMPANY, WESTCHESTER FIRE INSURANCE COMPANY and ACE AMERICAN INSURANCE COMPANY (the "Companies") do hereby certify that

(i) the foregoing Resolutions adopted by the Board of Directors of the Companies are true, correct and in full force and effect,
(ii) the foregoing Power of Attorney is true, correct and in full force and effect.

Given under my hand and seals of said Companies at Whitehouse Station, NJ, this

Rupert HD Swindells Assistant Secretary

IN THE EVENT YOU WISH TO VERIFY THE AUTHENTICITY OF THIS BOND OR NOTIFY US OF ANY OTHER MATTER, PLEASE CONTACT US AT
Telephone (908) 903-3493 Fax (908) 903-3656 e-mail: surety@chubb.com

26-051

Cerris Systems North Central, Inc.

Cerris Systems North Central, Inc. fka MMC Mechanical Contractors

Supplier Response

Event Information

Number: 26-051
Title: Amtrak Rooftop Unit 1 Replacement
Type: Notice to Bidders
Issue Date: 3/5/2026
Deadline: 3/19/2026 02:00 PM (CT)

Contact Information

Contact: Sharon Mulder, Asst. Purchasing Agent
Address: Purchasing
440 S. 8th Street
Suite 200
Lincoln, NE 68508
Phone: (402) 441 x7428
Email: smulder@lincoln.ne.gov

Cerris Systems North Central, Inc. Information

Contact: Justin Mommens
Address: 9751 S 142nd Street.
Omaha, NE 68138
Phone: (402) 861-0681 x0
Email: jmommens@cerris.com
Web Address: www.mmccontractors.com

By submitting your response, you certify that you are authorized to represent and bind your company.

Justin Mommens
Signature

jmommens@cerris.com
Email

Submitted at 3/16/2026 10:52:55 AM (CT)

Requested Attachments

Foreign Adversary Contracting Prohibition Act Form

Foreign Adversary Contracting Prohibition Act.pdf

Complete and upload the certification form in the Attachments tab in Ebid.

U.S. Citizenship Attestation Form

US Citizenship Attestation Form.pdf

Complete and upload the U.S. Citizenship Attestation Form from the Attachment tab.

Warranty

Warranty.pdf

Upload your warranty statement in the suppliers response attachment section of the bid.

Bid Attributes

1	**Instructions to Bidders** I acknowledge reading and understanding the Instructions to Bidders. ☑ Yes
2	**Insurance Requirements and Endorsements** Contractor agrees to provide required insurance coverage and comply with each provision listed in the **Insurance Requirements** attached in EBid. Submission of the **Certificate of Insurance** and the applicable **endorsements**. **Bidders are strongly encouraged to send the insurance requirements and endorsement information to their insurance agent prior to bid closing in order to expedite the contract execution process.** ☑ Yes
3	**Specifications** I acknowledge reading and understanding the specifications. ☑ Yes
4	**Draft Sample Contract** I acknowledge reading and understanding the draft sample contract. ☑ Yes

5 Contract Contact

The Purchasing Department issues Contracts via email to a designated contact person of the awarded Bidder. This designee should be the primary contact with the department through the delivery of the product/services. Please list the name, email address and phone number of the person who will be the contact person for the contract to be awarded.

Justin Mommens, 402-889-5447, jmommens@cerris.com

6 Delivery Lead Time

State number of delivery days after receipt of order (ARO) or upon email notification of an executed contract.

154 days

7 Performance/Payment Bonds

I acknowledge that a Performance Bond and a Payment Bond each in the amount of 100% of the Contract amount will be required with the signed contract upon award of this project.

☑ Yes

8 Employee Class Act Affidavit

I acknowledge reading and understanding the Employee Classification Act, Executive Order 83319. If awarded the contract, I will abide by the law, notarize and attach the Employee Classification Act Affidavit to the contract.

☑ Yes

9 Bid Documents

I acknowledge and accept that it is my responsibility as a Bidder to promptly notify the Purchasing Department Staff prior to the close of the bid of any ambiguity, inconsistency or error which I may discover upon examination of the bid documents including, but not limited to the Specifications.

☑ Yes

10 Assignment

Vendor shall not assign, transfer, convey, sublet, or otherwise dispose of any award or any or all of its rights, title, or interest therein, or delegate the duties hereunder without the prior written consent of the City.

☑ Yes

11 References

I have attached my References in the Response Attachments tab.

☑ Yes

12 Warranty

I warrant that all equipment and supplies offered will conform to the design, specifications, samples, or other descriptions contained in this bid, will be free from defects in workmanship and material and to the extent that I know, or have reason to know of the purpose for which the supplies are intended, will be fit and sufficient for such purpose as deemed applicable. The warranty required here under must provide all parts, equipment, transportation, technical assistance, labor and supervision necessary to correct any deficiency resulting from manufacturing defects without charge for a period of one (1) year after the date of final acceptance of all materials, equipment, and services furnished by successful bidder. Thereafter the manufacturer's standard warranty will apply.

☑ Yes

13 Standard Specifications for Municipal Construction

I acknowledge reading and understanding the current City of Lincoln Standard Specifications for Municipal Construction and Lincoln Standard Plans (including General Provisions and Requirements, and Material and Construction Specifications) View at: lincoln.ne.gov | Standard Specifications for Municipal Construction

☑ Yes

14	**Foreign Adversary Contracting Prohibition Act** I hereby understand and agree to comply with the requirements of the Foreign Adversary Prohibition Act and have completed and uploaded the certification form in the Response Attachments tab in Ebid. If a Vendor indicates on such certification form that the company is a scrutinized company, the Vendor must meet the exception requirements under the Act and agrees to provide documentation to verify the exception requirements with the bid response. Vendor further understands and agrees that any scrutinized company that violates the certification may be subject to action by the Nebraska Attorney General, civil penalty, and such violation may void the contract. ☑ Foreign Adversary Contracting Prohibition Act

15	**U.S. Citizenship Attestation** **Is your company legally considered an Individual or Sole Proprietor: YES or NO** As a Vendor who is legally considered an Individual or a Sole Proprietor I hereby understand and agree to comply with the requirements of the United States Citizenship Attestation Form, available at: http://www.sos.ne.gov/business/notary/citizenforminfo.html All awarded Vendors who are legally considered an Individual or a Sole Proprietor must complete the form and submit it with contract documents at time of execution. If a Vendor indicates on such attestation form that he or she is a qualified alien, the Vendor agrees to provide the US Citizenship and Immigration Services documentation required to verify the Vendor's lawful presence in the United States using the Systematic Alien Verification for Entitlements (SAVE) Program. Vendor further understands and agrees that lawful presence in the United States is required and the Vendor may be disqualified or the Contract terminated if such lawful presence cannot be verified as required by Neb. Rev. Stat. 4-108. No

16	**Tax Exempt Certification Forms** Materials being purchased in this bid are tax exempt and unit prices are reflected as such. A Purchasing Agent Appointment form and an Exempt Sales Certificate form shall be issued with contract documents. (Note: State Tax Law does not provide for sales tax exemption for proprietary functions for government, thereby excluding the purchases of pipes to be installed in water lines and purchase of water meters.) ☑ Yes

Bid Lines

1	Cost to Furnish and Install the Roof Top Unit, Replacement and HVAC Modifications Quantity: 1 UOM: Lump Sum Unit Price: $76,377.00 Total: $76,377.00 Manufacturer: Aaon

Response Total: $76,377.00

Gartner Associates
HVAC SOLUTIONS

8730 F St.
Omaha, NE 68127
(402) 572-6969

WARRANTY

AAON WARRANTY

- 5 YEAR COMPRESSOR WARRANTY
- 25 YEAR NON-PRORATED HEAT EXCHANGER WARRANTY
- 18 MONTH UNIT PARTS WARRANTY

ALL WARRANTIES ARE FROM DATE OF SHIPMENT

FREIGHT AND LABOR FOR WARRANTY ITEMS IS NOT INCLUDED.

SALES & USE TAX NOT INCLUDED
QUOTED PRICES FIRM FOR 30 DAYS FROM DATE OF THIS PROPOSAL
SUBJECT TO TERMS AND CONDITIONS OF SALE STATED ON THE REVERSE SIDE HEREOF

AMTRAK RTU REPLACEMENT

1. GENERAL NOTICE

1.1 The City of Lincoln, hereinafter referred to as the *Owner*, is requesting bids from qualified companies, hereinafter referred to as *Vendor(s)*, for Rooftop Unit Replacement, Unit 1.

1.1.1 The Amtrak Station is located at 227 Pinnacle Arena Drive, Lincoln, Nebraska, 68508.

1.2 The Vendor shall include all costs associated with labor, supervision, materials, supplies, permits, and licenses required to perform the services requested in these specifications, including all plans, drawings, and other bid documents.

1.2.1 Any reference to compliance with the General Specifications shall also mean compliance with all other documents attached to or referenced in the bid.

1.3 The contract will be awarded to the lowest, responsible, and responsive Vendor whose bid substantially meets all required specifications, duties, terms, and conditions outlined in this request.

1.4 The Vendor shall protect the general public, employees, and buildings from damage during all phases of the project.

1.4.1 Any damage to surrounding areas not included in the scope of this project shall be repaired immediately by the Vendor at no cost to the Owner.

1.5 The Owner will execute a firm-fixed-price contract for the work performed under the awarded contract.

1.5.1 The Owner reserves the right to allow adjustments to the contract should there be a substantial change in the nature of the work involved.

1.5.1.1 Any such adjustment must be made through a written contract amendment signed by both the Vendor and the Owner at the time of the change.

1.6 Any deviation from these specifications—including requests for substitutions, contract terms, or other bid documents—must be documented on company letterhead and submitted with the bid.

1.7 Vendors must submit their bid and all required attachments through the City/County E-Bid System.

1.7.1 Vendors must be registered with the City of Lincoln/Lancaster County Purchasing Department to submit a bid.

1.7.2 To register, visit the City of Lincoln website at *lincoln.ne.gov*, search "bid," select **Supplier Registration**, and follow the instructions to completion.

1.8 All general inquiries regarding these specifications or bid documents shall be submitted via email to: Sharon Mulder, Assistant Purchasing Agent, *smulder@lincoln.ne.gov*.

1.8.1 Responses to inquiries will be distributed to prospective Vendors as electronic addenda.

1.8.2 All inquiries must be submitted at least five (5) calendar days prior to the bid close date.

1.8.3 Vendors are prohibited from discussing this proposal with any Owner employee during the solicitation and award process, except Purchasing Staff.

1.8.3.1 Failure to comply with this requirement may result in immediate disqualification of the bid.

1.9 The awarded contract is not assignable without written approval from the Owner in the form of a contract amendment.

1.10 Payment will be made upon final completion of the project and approval by the Project Manager and Owner's Representative.

1.11 The Project Manager for this project is Dee Adams, PBC Facilities Manager.

1.12 The Owner's Representative for this project is Dee Adams, Facilities Manager.

1.13 **A mandatory pre-bid meeting will be held on Tuesday, March 10, 2026, at 2:00p.m. at the Amtrak Station located at 227 Pinnacle Arena Drive, Lincoln, NE. All Vendors interested in submitting a bid are encouraged to attend to view the work site. No additional site visits will be scheduled prior to bid close.**

1.14 A performance/payment bonds are required for this project.

1.15 Normal working hours are 7:00 a.m. to 3:00 p.m., Monday through Friday. Prior approval is required for weekend work.

1.16 There is no loading dock available.

1.17 Available parking is either street/metered parking or possibly inside their fence. This will be determined by pre-bid.

2. QUALIFICATIONS OF THE BIDDER

2.1 The Owner may conduct investigations as deemed necessary to determine the Vendor's ability to perform the required work. The Vendor should provide all requested information and data for this purpose.

2.2 No Vendor will be considered unless they are currently engaged in providing services similar to those described herein and can demonstrate, to the satisfaction of the Owner, the ability to perform the work in accordance with these specifications and industry standards.

2.3 The Vendor shall provide at least three (3) current references for customers where similar services have been performed.

- 2.3.1 Vendors who have provided similar services to the Owner within the past five (5) years may not be required to submit references unless specifically requested.
- 2.3.2 Reference information may be included in the Response Attachment section of the E-Bid submission.

3. REMOVAL, DISPOSAL, AND SITE RESTORATION

3.1 The vendor shall consult with the owner prior to equipment removal regarding the handling of surplus materials.

3.2 The contractor shall properly dispose of all materials, debris, and supplies associated with their scope of work in accordance with all applicable local, state, and federal regulations.

- 3.2.1 All refrigerants (Freon) shall be recovered and certified in accordance with applicable regulations prior to removal of the equipment.

4. SCOPE OF THE PROJECT

4.1 The Amtrak Station intends to replace the existing Aaon rooftop HVAC unit due to its failure to operate. This unit has one single phase power.

- 4.1.1 The project includes the complete removal of the existing Aaon HVAC unit and exterior duct work, the furnishing and installation of a new high-efficiency, current-production

rooftop unit, all permits and inspections shall be included within the bid.

4.1.2 All work shall be completed in accordance with all state and local authorities and current version of the City of Lincoln Standard Specifications for Municipal Construction and City of Lincoln Standard Plans.

Exterior Equipment Support Framework

4.2 The intent is to reuse the existing equipment's location and mounting frame, which shall remain in place unless determined to be insufficient or incapable of supporting the new equipment.

4.3 If replacement is required, the contractor shall include all associated modifications and replacement costs within the bid.

Exterior Air Duct Work, Supply & Return

4.4 All exterior ductworks shall be new, exterior-rated, weather-tight, and insulated.

4.4.1 All duct transition connections between new and existing ductwork shall be made within the interior of the building.

Controls Interface

4.5 They shall be included within the bid.

4.5.1 The current controls interface with both of the rooftop units. The two units are a north and a south one. The existing control is a WattMaster Contol and a picture of it is included in the bid attachment section.

4.5.2 Our goal is to have the existing control unit interface with the new rooftap replacement unit.

Field Verification

4.6 The contractor shall be responsible for all field verification, including measurements and connections, to ensure proper fitness and operation of the replacement unit.

4.6.1 This shall include verification of controls integration, unit voltage, and any required modifications not typically supplied with the purchase of the replacement unit.

4.6.2 All associated costs shall be included within the bid.

5.10 **Manufacturer Information**

5.10.1 The bidder shall submit the manufacturer's I h

5.10.2 This information shall be used to determine eligibility for pre-purchase submittals to Lincoln Electric System (LES)

for rebate consideration under the Sustainable Energy Program (SEP).

5.10.3 All rebates received shall be remitted to the City of Lincoln Municipal Services Center (MSC) and applied toward the project payment fund.

5.11 **Manufacture O&M and Drawings as-builts**

5.11.1 Bidder shall include in their bid two (2) complete sets of as-built drawings and the manufacturer's published Operation and Maintenance (O&M) manuals. O&M manuals shall include a complete breakdown of the unit, including part numbers and detailed wiring diagrams.

6. ROOF TOP LOCATION

6.1 This rooftop unit is located at the Amtrak Staton.

6.2 All work shall be coordinated with the Facility Manager, Dee Adams to arrange proper access to the space, the notice to proceed shall require a minimum of (3) business day to allow the tenant enough time to prepare temporary relocation of staff to complete the project.

6.3 All associated parts and materials shall be on site prior to any work to begin to ensure a minimum outage can be planned for.

7. PROJECT COMPLETION

7.1 A Notice to Proceed will be provided to the Contractor prior to the start of work, but in no event before the contract has been executed by both parties.

7.2 Project completion shall be sixty (60) days from delivery of the equipment.

7.3 Once the contract begins, the contractor shall continue through completion without interruption unless there is weather or for an unforeseen issue beyond control.

8. CONTRACTOR INSURANCE

8.1 The awarded Vendor shall furnish the Owners with a Certificate of Insurance ACORD and associated endorsements in the kinds and minimum amounts as detailed in the attached "Insurance Requirements for all Contracts" at time of award.

8.2 All certificates of insurance ACORD and endorsements shall be filed with the Owners showing specific limits of insurance coverage required and ACORD showing City of Lincoln and Lancaster County as "Named Additional Insured" as pertains to these services.

8.3 Vendors are strongly encouraged to send the insurance requirements and endorsement information to their Insurance Agent during the bid process in order to ensure contract execution within 5 days of award notice.

9. EVALUATION CRITERIA

9.1 Evaluation of bids will consist of the following:

- 9.1.1 The lowest, responsible, responsive bid which will be most advantageous to the Owner, and as the Owner deems, will best serve the requirements and interests of the Owner
- 9.1.2 Ability to provide labor and services as required in the Specifications or approved alternate/substitution
- 9.1.3 Ability to meet project completion dates listed herein
- 9.1.4 Complete documentation
- 9.1.5 Deviations from the General Requirements and Specifications
- 9.1.6 Favorable references
- 9.1.7 Pricing


WattMaster
CONTROLS
Fri, February 27, 2026
12:06
System Secured
My System
Login
User Passcodes
Settings
Set Time & Date

smart # 10070200
7-26-10/law/tb

CITY OF LINCOLN
MAYOR CHRIS BEUTLER

CITY OF LINCOLN
EXECUTIVE ORDER

NO. 083319

WHEREAS, there is concern over the inappropriate competitive advantages in the public bidding process for local publicly funded construction and delivery service contracts resulting from the misclassification of individuals performing construction labor services as "independent contractors" rather than "employees"; such "independent contractors" are commonly referred to as "1099 workers" due to the IRS form they receive rather than a W-4 which an employee receives;

WHEREAS, this misclassification of such individuals as "independent contractors" rather than as "employees" eliminates any obligation to pay these individuals legally required minimum or overtime wages, to provide legally required workers' compensation insurance, to make unemployment insurance payments, to pay legally required employment and payroll taxes, and to provide any other health, pension, or benefit such individuals would typically receive if properly classified as employees;

WHEREAS, this misclassification of individuals performing construction labor services for the contractor as "independent contractors" rather than "employees" is a violation of federal and state law, but is difficult to enforce once public construction or delivery service contracts have been bid, awarded, and entered into;

WHEREAS, the use of public funds to compensate contractors who unlawfully avoid their obligation to pay legally required minimum or overtime wages, to provide legally required workers' compensation insurance, to make unemployment insurance payments, to pay legally required employment and payroll taxes, and to provide any other health, pension, or benefit is not in the public interest; and

WHEREAS, the Employee Classification Act, Neb. Rev. Stat. §§ 48-2901 to 48-2912 (effective July 15, 2010) provides that any contract entered into between a political subdivision and a contractor shall require that each contractor who performs construction or delivery service pursuant to the contract submit to the political subdivision an affidavit attesting that (1) each individual performing services for such contractor is properly classified under the Employee Classification Act, (2) such contractor has completed a federal I-9 immigration form and has such form on file for each employee performing services, (3) such contractor has complied with Neb. Rev. Stat. § 4-114 requirements that the contractor register and use a federal immigration employment verification system to determine the work eligibility status of new employees physically performing services in the State of Nebraska, (4) such contractor has no reasonable basis to believe that any individual performing services for such contractor is an undocumented worker, and (5) as of the time of the contract, such contractor is not barred from contracting with the state or any political subdivision pursuant to § 48-2912 of the Employee Classification Act.

NOW, THEREFORE, BY VIRTUE OF THE AUTHORITY VESTED IN ME by the Charter of the City of Lincoln, I hereby establish the following policy as to the bid and award of contracts to contractors for construction and delivery services with the City of Lincoln:

The Purchasing Agent shall immediately include in the City of Lincoln's notice to bidders for construction contracts that all contractors submitting bids in response to the notice shall affirmatively certify to the Purchasing Agent that all individuals hired to perform construction or delivery labor services for the contractor under the contract shall be properly classified as employees and not as independent contractors if the individual does not meet the requirements of an independent contractor under federal and state law (including the requirements of the State of Nebraska Employee Classification Act), and that the contractor will comply with all legal obligations with respect to these employees (including, but not limited to, minimum and overtime pay, workers' compensation, unemployment compensation, and payment of federal and state payroll taxes). The

notice to bidders shall further provide that contractors may use affidavits required pursuant to the Employee Classification Act for this purpose, but that a failure to make the affirmative certification to the Purchasing Agent shall render the bidder ineligible for award of the contract.

The Purchasing Agent shall immediately include the following provisions in contracts for construction or delivery services:

(1) Contractor agrees that each individual performing services for the contractor shall be properly classified as an employee and not as an independent contractor if the individual does not meet the requirements of an independent contractor under the State of Nebraska's Employee Classification Act and that contractor shall comply with all legal obligations with respect to the employee (including, but not limited to, minimum and overtime pay, workers' compensation, unemployment compensation, and payment of federal and state payroll taxes).

(2) Contractor understands and agrees that failure to classify each individual hired to perform services under the contract as an employee rather than as an independent contractor if the individual does not meet the requirements of an independent contractor under the State of Nebraska's Employee Classification Act and/or failure to comply with legal obligations with respect to the employee (including, but not limited to, minimum and overtime pay, workers' compensation, unemployment compensation, and payment of federal and state payroll taxes) shall be considered a breach of the contract and is a grounds for rescission of the contract by the City.

(3) Contractor additionally agrees to include the following provisions in each subcontract entered into with a subcontractor as part of the contractor's contract with the City:

(a) Subcontractor agrees that each individual performing services for the subcontractor shall be properly classified as an employee and not as an independent contractor if the individual does not meet the requirements of an independent contractor under the State of Nebraska's Employee Classification Act and that subcontractor shall comply with all legal obligations with respect to the employee (including, but not limited to, minimum and overtime pay,

workers' compensation, unemployment compensation, and payment of federal and state payroll taxes).

(b) Subcontractor understands and agrees that subcontractor's failure to properly classify individuals hired to perform services under the subcontract as employees and not as independent contractors if the individual does not meet the requirements of an independent contractor under the State of Nebraska's Employee Classification Act and/or failure to comply with legal obligations with respect to the employee (including, but not limited to, minimum and overtime pay, workers' compensation, unemployment compensation, and payment of federal and state payroll taxes) shall be considered a breach of the contract and is a grounds for rescission of the subcontract by the contractor.

(4) Contractor agrees that if subcontractor fails to or is suspected of failing to properly classify each individual hired pursuant to the subcontract as an employee and not as an independent contractor if the individual does not meet the requirements of an independent contractor under the State of Nebraska's Employee Classification Act and/or fails to comply with legal obligations with respect to the subcontractor's employee, the contractor shall take appropriate corrective action including, but not limited to, reporting the suspected violation of the State of Nebraska Employee Classification Act to the Nebraska Department of Labor or rescission of the subcontract by the contractor. Written notification of the corrective action shall be submitted to the City of Lincoln Purchasing Department. Contractor understands and agrees that contractor's failure to take appropriate corrective action shall be considered a breach of the contractor's contract with the City of Lincoln and is a grounds for rescission of the contract by the City.

(5) The City of Lincoln shall notify the Nebraska Department of Labor of any contractor or subcontractor it has determined is in breach of contract due to the terms of this order.

(6) Any contractor or subcontractor who shall have been determined by the Nebraska Department of Labor to have knowingly provided a false affidavit to the City of Lincoln

under the State of Nebraska's Employee Classification Act shall be referred to the Purchasing Agent of the City who shall determine whether to declare such contractor or subcontractor an irresponsible bidder who shall be disqualified from receiving any business from the municipality for a stated period of time, in accordance with Lincoln Municipal Code § 2.18.030(n)(1) or (2).

(7) This policy does not prohibit a contractor or subcontractor from hiring individuals to perform construction labor services as independent contractors, provided that the contractor's or subcontractor's use of such individuals as an independent contractor complies with the criteria found in subdivision 5 of Neb. Rev. Stat. § 48-604 and is otherwise valid under federal and state law and is not intended to circumvent lawful obligations under federal and state law or city contractual requirements.

The City Clerk is directed to send a copy of this Executive Order to Vince Mejer, City Purchasing Agent, for his record.

Dated this 28 day of July, 2010.

Chris Beutler, Mayor of Lincoln

Approved as to Form & Legality:

City Attorney

EMPLOYEE CLASSIFICATION ACT AFFIDAVIT

For the purposes of complying with THE NEBRASKA EMPLOYEE CLASSIFICATION ACT, I, Greg Hunter, herein below known as the Contractor, state under oath and swear as follows:

1. Each individual performing services for the Contractor is properly classified under the Employee Classification Act.

2.The Contractor has completed a federal I-9 immigration form and has such form on file for each employee performing services.

3. The Contractor has complied with Neb Rev Stat 4-114.

4. The Contractor has no reasonable basis to believe that any individual performing services for the Contractor is an undocumented worker.

5. The Contractor is not barred from contracting with the state or any political subdivision pursuant to section 12 of this Act.

6. As the Contractor I understand that pursuant to the Employee Classification Act a violation of the Act by a contractor is grounds for rescission of the contract by the City. I understand that pursuant to the Act any contractor who knowingly provides a false affidavit may be subject to criminal penalties and upon a second or subsequent violation shall be barred from contracting with the City for a period of three years after the date of discovery of the falsehood.

I hereby affirm and swear that the statements and information provided on this affidavit are true, complete and accurate. The undersigned person does hereby agree and represent that he or she is legally capable to sign this affidavit and to lawfully bind the Contractor to this affidavit.

PRINT NAME: GREG RUSSELL HUNTER
(First, Middle, Last)

SIGNATURE: _____

TITLE: VP

State of Nebraska)
) ss.
County of Lancaster)

Charity Hansen
General Notary
State of Nebraska
Commission Expires
08-16-2027

This affidavit was signed and sworn to before me, the undersigned Notary Public, on this 25 day of March, 2024

Charity Hansen
Notary Public

FOREIGN ADVERSARY CONTRACTING PROHIBITION ACT
CERTIFICATION FORM FOR
TECHNOLOGY RELATED PRODUCT OR SERVICES

For the purposes of complying with the Foreign Adversary Contracting Prohibition Act ("the Act"), Neb. Rev. Stat. §73-901 to §73-907, I attest and certify as follows:

Name of Company Ceris Systems

Check all that apply:

☑ I am authorized to attest and certify as the owner of the Company, in whole or in part, or as an authorized representative of the Company, to make the certifications required herein.

☐ The Company is providing technology related products and/or services to the public entity and is not a scrutinized company as defined in the Act; it is not subcontracting with a scrutinized company under the Act; and the technology related products and/or services provided herein do not originate with a scrutinized company under the Act.

☑ The Company is not providing technology related goods or services as defined under the Act.

☐ The Company is a scrutinized company and has entered into an Agreement or an Agreement Renewal with the public entity to provide a technology related good manufactured by a scrutinized company that meets the exception for the provision of a technology related good by a scrutinized company.

☑ I hereby attest and certify on behalf of the Company that the responses and information provided on this form are true, complete, and accurate. The Company understands that any scrutinized company that violates this Act or that violates the certification may be subject to action by the Nebraska Attorney General, civil penalty, and that such violation may void the contract.

PRINT NAME: Justin J. Mommens
(First, Middle, Last)

SIGNATURE: 

TITLE: Service General Manager

DATE: 03-16-26

Neb. Rev. Stat 77-1323 *Every person, partnership, limited liability company, association, or corporation furnishing labor or material in the repair, alteration, improvement, erection, or construction of any public improvement shall furnish a certified statement to be attached to the contract that all equipment to be used on the project, except that acquired since the assessment date, has been assessed for taxation for the current year, giving the county where assessed.*

Pursuant to Neb. Rev. Stat. 77-1323, I, Greg Hunter, do hereby certify that all equipment to be used on Bid No. 26-051, except that equipment acquired since the assessment date, has been assessed for taxation for the current year, in Lancaster County, Nebraska.

DATED this 25th day of March, 2026.

By: _____
GREG HUNTER

Title: VP

Contractual Insurance Determination Form

Submitted on	4 March 2026, 11:54AM
Receipt number	206
Related form version	16

Welcome to the Contractual Insurance Determination Form. These questions will help you determine what type(s) of insurance are needed for your specific agreement. Once the questions have been answered, you will receive an email with the required insurance needed for your agreement. The purpose of insurance is to protect the **Owner's** interests during the term of the agreement and, in some cases, after the agreement ends. The insurance is considered part of the agreement and must be followed in full.

Please see the guide for more information and definitions

"Owner(s)" refers to any, all, or a combination of the following entities: the City of Lincoln, Nebraska; Lancaster County, Nebraska; the Lincoln-Lancaster County Public Building Commission; and/or the West Haymarket Joint Public Agency. This also includes their elected and appointed officials, officers, employees, agents, contractors, and consultants. The Owner may change the insurance needs which are suggested if needed to serve its best interests. Any such change must be made in writing. A change to one part of the insurance needs does not mean that other parts of the agreement or insurance terms are changed. Any updates or exceptions to the suggested insurance applies only to the specific agreement they were made for. These changes do not set a precedent or signal a broader policy change for other agreements as each agreement is unique. Contractors will be required to provide certificates of Insurance (COIs) as part of the agreement process. When applicable, the Owner(s) must be listed as an additional insured. While insurance endorsements may also be required depending on the type of service or risk involved, we will request them but will not delay agreement execution solely due to the absence of those endorsements. To streamline the process and ensure consistency with Purchasing procedures, we will allow five (5) business days from the time of request for contractors to submit any applicable endorsements. If the required endorsements are received within that timeframe, they will be reviewed and filed. If not, the agreement will proceed as scheduled as long as the COI and the completed Contractual Determination Form has been attached or submitted with the agreement. This approach balances our due diligence in risk management with the need to avoid unnecessary delays in agreement execution.

DEFINITIONS: For purposes of these Requirements, the following definitions apply:

- "**Agreement**" shall mean the contract between the Owner and the Contractor into which these Insurance Requirements are incorporated by reference.
- "**City**" shall mean the City of Lincoln, NE.
- "**COI**" shall mean a Certificate of Insurance.
- "**Contractor**" shall mean the individual, company, etc. being hired to perform the Work under the Agreement. Contractor shall include all owners, officers, employees, agents, and subcontractors and employees of any of them.
- "**County**" shall mean the County of Lancaster, Nebraska.
- "**Owner(s)**" shall mean any, all, or a combination of the City of Lincoln, NE, County of Lancaster, Nebraska, Lincoln-Lancaster County Public Building Commission, and/or the West Haymarket Joint Public Agency and their elected and appointed officials, officers, employees, agents, contractors, and consultants.
- "**PBC**" shall mean the Lincoln-Lancaster County Public Building Commission.
- "**Site**" shall mean the location the Work is being completed and/or delivered to.
- "**WHJPA**" shall mean the West Haymarket Joint Public Agency.
- "**Work**" shall mean the project being completed, products being delivered, and/or services being provided as contemplated in the Agreement.

Please enter your name	Chris Connolly
Please enter your email address Your email address is required to receive the final document that you will submit to Purchasing.	cconnolly@lincoln.ne.gov
Please select the Owner(s) of this project (1 or more options)	West Haymarket Joint Public Agency (WHJPA)
What is the name of the Contract/Vendor?	Rooftop Unit Replacement
Provide a brief discription (scope) of the purpose and main activities covered by this contract.	Replacement of rooftop HVAC unit.

Summarize what goods, services, or work will be performed.

	What are you procuring?
Product - Not software (examples include - furniture, computers, traffic signals, equipment, vehicles) Service - General (this is work performed by a contractor or vendor that is typically labor based, examples include - janitorial, landscaping, building maintenance, printing, equipment repair)	
What is the total estimated value of this agreement over its full term, including all renewal options?	$10,001 - $50,000
Does the provider have employees? Do not include independent contractors they may utilize for the contracted services	Yes
Where will the service or construction be located?	On Owner's property
Will there be an unmanned arial/aircraft vehicle or system (drone) used?	No
Will the vendor be accessing Owners' data, systems or networks?	No
Is the vendor a tech company? Primarily focused on developing, manufacturing, or supporting tech-related products and services - examples include Apple, Google, Information Analytics, Sandhills Global, Oracle	No
Will any of owner's vehicles be serviced or handled by vendor?	No
Will the vendor or their employees operate a licensed motor vehicle for business purposes while performing work? Examples are delivery of goods, landscaping, snow removal, shuttle service, and using a vehicle for construction or maintenance - this would exclude personal commuting to and from the work site.	Yes
Please describe the nature and frequency of driving activities involved	Driving to Amtrak Station to install rooftop HVAC unit.
Is there mold, asbestos, fuel, chemicals, spraying, or other hazardous material involved?	No
Is there anything unique about this agreement, or anything you would like Risk Management to review or discuss further?	No

Contractor shall comply with the following provisions:

GL - Commercial General Liability

AL - Automobile Liability

WC - Workers' Compensation; Employers' Liability

QUESTIONS

Still unsure? Contact:

- **City of Lincoln Risk Management:** 402-441-7082
- **Lancaster County Risk Management:** 402-441-6510
- **Purchasing Division:** 402-441-8103

CERTIFICATE OF LIABILITY INSURANCE

DATE (MM/DD/YYYY): 7/1/2026 — 3/27/2026

THIS CERTIFICATE IS ISSUED AS A MATTER OF INFORMATION ONLY AND CONFERS NO RIGHTS UPON THE CERTIFICATE HOLDER. THIS CERTIFICATE DOES NOT AFFIRMATIVELY OR NEGATIVELY AMEND, EXTEND OR ALTER THE COVERAGE AFFORDED BY THE POLICIES BELOW. THIS CERTIFICATE OF INSURANCE DOES NOT CONSTITUTE A CONTRACT BETWEEN THE ISSUING INSURER(S), AUTHORIZED REPRESENTATIVE OR PRODUCER, AND THE CERTIFICATE HOLDER.

IMPORTANT: If the certificate holder is an ADDITIONAL INSURED, the policy(ies) must have ADDITIONAL INSURED provisions or be endorsed. If SUBROGATION IS WAIVED, subject to the terms and conditions of the policy, certain policies may require an endorsement. A statement on this certificate does not confer rights to the certificate holder in lieu of such endorsement(s).

PRODUCER	Lockton Companies, LLC DBA Lockton Insurance Brokers, LLC in CA CA license #0F15767 444 W. 47th St., Ste. 900 Kansas City MO 64112-1906 (816) 960-9000 kcasu@lockton.com	CONTACT NAME: PHONE (A/C, No, Ext): FAX (A/C, No): E-MAIL ADDRESS:	
INSURED 1066933	CERRIS SYSTEMS NORTH CENTRAL, INC. fka MMC MECHANICAL CONTRACTORS, INC. 4833 N 32ND STREET LINCOLN NE 68504	INSURER(S) AFFORDING COVERAGE	NAIC #
		INSURER A : Greenwich Insurance Company	22322
		INSURER B : XL Specialty Insurance Company	37885
		INSURER C : American Guarantee and Liab. Ins. Co.	26247
		INSURER D :	
		INSURER E :	
		INSURER F :	

COVERAGES **CERTIFICATE NUMBER:** 23221233 **REVISION NUMBER:** XXXXXXX

THIS IS TO CERTIFY THAT THE POLICIES OF INSURANCE LISTED BELOW HAVE BEEN ISSUED TO THE INSURED NAMED ABOVE FOR THE POLICY PERIOD INDICATED. NOTWITHSTANDING ANY REQUIREMENT, TERM OR CONDITION OF ANY CONTRACT OR OTHER DOCUMENT WITH RESPECT TO WHICH THIS CERTIFICATE MAY BE ISSUED OR MAY PERTAIN, THE INSURANCE AFFORDED BY THE POLICIES DESCRIBED HEREIN IS SUBJECT TO ALL THE TERMS, EXCLUSIONS AND CONDITIONS OF SUCH POLICIES. LIMITS SHOWN MAY HAVE BEEN REDUCED BY PAID CLAIMS.

INSR LTR	TYPE OF INSURANCE	ADDL INSD	SUBR WVD	POLICY NUMBER	POLICY EFF (MM/DD/YYYY)	POLICY EXP (MM/DD/YYYY)	LIMITS	
A	X COMMERCIAL GENERAL LIABILITY [ ] CLAIMS-MADE [X] OCCUR X CONTRACTUAL GEN'L AGGREGATE LIMIT APPLIES PER: [ ] POLICY [X] PRO-JECT [X] LOC [ ] OTHER:	Y	Y	CGD740995705	7/1/2025	7/1/2026	EACH OCCURRENCE DAMAGE TO RENTED PREMISES (Ea occurrence) MED EXP (Any one person) PERSONAL & ADV INJURY GENERAL AGGREGATE PRODUCTS - COMP/OP AGG $	$ 2,000,000 $ 300,000 $ 10,000 $ 2,000,000 $ 4,000,000 $ 4,000,000 $
A	AUTOMOBILE LIABILITY X ANY AUTO X OWNED AUTOS ONLY [ ] SCHEDULED AUTOS X HIRED AUTOS ONLY [X] NON-OWNED AUTOS ONLY	Y	Y	CAD740995805	7/1/2025	7/1/2026	COMBINED SINGLE LIMIT (Ea accident) BODILY INJURY (Per person) BODILY INJURY (Per accident) PROPERTY DAMAGE (Per accident) $	$ 2,000,000 $ XXXXXXX $ XXXXXXX $ XXXXXXX $ XXXXXXX
B C	X UMBRELLA LIAB [X] OCCUR EXCESS LIAB [ ] CLAIMS-MADE DED X RETENTION $ 10,000	N	N	US00110361LI25A AEC6200111-05	7/1/2025 7/1/2025	7/1/2026 7/1/2026	EACH OCCURRENCE AGGREGATE $	$ 15,000,000 $ 15,000,000 $ XXXXXXX
B	WORKERS COMPENSATION AND EMPLOYERS' LIABILITY ANY PROPRIETOR/PARTNER/EXECUTIVE OFFICER/MEMBER EXCLUDED? (Mandatory in NH) Y/N [N] If yes, describe under DESCRIPTION OF OPERATIONS below	N/A	Y	--- SEE ATTACHMENT ---	7/1/2025	7/1/2026	X PER STATUTE [ ] OTH-ER E.L. EACH ACCIDENT E.L. DISEASE - EA EMPLOYEE E.L. DISEASE - POLICY LIMIT	 $ 1,000,000 $ 1,000,000 $ 1,000,000

DESCRIPTION OF OPERATIONS / LOCATIONS / VEHICLES (ACORD 101, Additional Remarks Schedule, may be attached if more space is required)

RE: AMTRAK ROOFTOP UNIT 1 REPLACEMENT
CITY OF LINCOLN/LANCASTER COUNTY/LINCOLN-LANCASTER COUNTY PUBLIC BUILDING COMMISSION/WEST HAYMARKET JOINT PUBLIC AGENCY ARE ADDITIONAL INSURED ON GENERAL LIABILITY AND AUTO, IF REQUIRED BY WRITTEN CONTRACT. WAIVER OF SUBROGATION IN FAVOR OF THE ADDITIONAL INSURED APPLIES ON GENERAL LIABILITY, AUTO, AND WORKERS COMPENSATION, IF REQUIRED BY WRITTEN CONTRACT AND WHERE ALLOWED BY LAW. COVERAGE IS SUBJECT TO THE TERMS AND CONDITIONS OF THE POLICY.

CERTIFICATE HOLDER

23221233
WEST HAYMARKET JOINT PUBLIC AGENCY
555 S. 10TH STREET
LINCOLN NE 68508

CANCELLATION See Attachment

SHOULD ANY OF THE ABOVE DESCRIBED POLICIES BE CANCELLED BEFORE THE EXPIRATION DATE THEREOF, NOTICE WILL BE DELIVERED IN ACCORDANCE WITH THE POLICY PROVISIONS.

AUTHORIZED REPRESENTATIVE

Joseph M Agnello

© 1988-2015 ACORD CORPORATION. All rights reserved.

WORKERS COMPENSATION AND EMPLOYERS LIABILITY INSURANCE

WC 00 03 13
(Ed. 4-84)

WAIVER OF OUR RIGHT TO RECOVER FROM OTHERS ENDORSEMENT

We have the right to recover our payments from anyone liable for an injury covered by this policy. We will not enforce our right against the person or organization named in the Schedule. (This agreement applies only to the extent that you perform work under a written contract that requires you to obtain this agreement from us.)

This agreement shall not operate directly or indirectly to benefit anyone not named in the Schedule.

SCHEDULE

WHERE REQUIRED BY WRITTEN AGREEMENT SIGNED PRIOR TO LOSS.

This endorsement changes the policy to which it is attached and is effective on the date issued unless otherwise stated.

Effective Policy # CWD742915902, CWD740995606, CWR742916002

Insured: Cerris Systems, Inc.

Insurance Company: AXA XL Specialty Insurance

Worker's Compensation & Employer's Liability Coverage

Policy No. CWD740995606 **07/01/2025 - 07/01/2026 XL Specialty Insurance – covers Entities:**

Cerris Systems Reno, Inc.	FKA	Building Control Services, Inc.
Cerris Systems, Inc.	FKA	MMC Contractors National, Inc.
Cerris Systems North Central, Inc.	FKA	MMC Mechanical Contractors, Inc.
Cerris Systems Iowa, Inc.	FKA	MMC Contractors Iowa, Inc.
Cerris Systems West, Inc.	FKA	MMC Contractors West, Inc.
Electric Company of Omaha		
Cerris Systems Group, Inc.	FKA	MMC Contractors, INC

Policy No. CWD742915902 **07/01/2025 - 07/01/2026 XL Specialty Insurance – covers Entities:**

Cerris, Inc.	FKA	MMC Corp.
Cerris Builders, Inc.	FKA	MW Builders, Inc.
SC Group Construction, Inc.		
Countywide Mechanical Systems, Inc		

Policy No. CWR742916002 **07/01/2025 - 07/01/2026 XL Specialty Insurance – Wisconsin WC Policy - covers all entities**

Excludes Puerto Rico and US Virgin Islands

Stop Gap Only: ND, OH, WA, WY

POLICY NUMBER: CGD740995705

COMMERCIAL GENERAL LIABILITY
CG 20 10 12 19

THIS ENDORSEMENT CHANGES THE POLICY. PLEASE READ IT CAREFULLY.

ADDITIONAL INSURED - OWNERS, LESSEES OR CONTRACTORS - SCHEDULED PERSON OR ORGANIZATION

This endorsement modifies insurance provided under the following:

COMMERCIAL GENERAL LIABILITY COVERAGE PART

SCHEDULE

Name Of Additional Insured Person(s) Or Organization(s):
Any person or organization for whom you have agreed in writing in a contract or agreement that such person or organization be added as an additional insured on your policy, provided the "bodily injury" or "property damage" occurs subsequent to the execution of the written contract or written agreement.

Location(s) Of Covered Operations:
Various as required per written contract.

Information required to complete this Schedule, if not shown above, will be shown in the Declarations.

A. Section II - Who Is An Insured is amended to include as an additional insured the person(s) or organization(s) shown in the Schedule, but only with respect to liability for "bodily injury", "property damage" or "personal and advertising injury" caused, in whole or in part, by:
1. Your acts or omissions; or
2. The acts or omissions of those acting on your behalf;
in the performance of your ongoing operations for the additional insured(s) at the location(s) designated above.
However:
1. The insurance afforded to such additional insured only applies to the extent permitted by law; and
2. If coverage provided to the additional insured is required by a contract or agreement, the insurance afforded to such additional insured will not be broader than that which you are required by the contract or agreement to provide for such additional insured.

B. With respect to the insurance afforded to these additional insureds, the following additional exclusions apply:
This insurance does not apply to "bodily injury" or "property damage" occurring after:
1. All work, including materials, parts or equipment furnished in connection with such work, on the project (other than service, maintenance or repairs) to be performed by or on behalf of the additional insured(s) at the location of the covered operations has been completed; or
2. That portion of "your work" out of which the injury or damage arises has been put to its intended use by any person or organization other than another contractor or subcontractor engaged in performing operations for a principal as a part of the same project.

C. With respect to the insurance afforded to these additional insureds, the following is added to Section III - Limits Of Insurance:
If coverage provided to the additional insured is required by a contract or agreement, the most we will pay on behalf of the additional insured is the amount of insurance:
1. Required by the contract or agreement; or
2. Available under the applicable limits of insurance;
whichever is less.

This endorsement shall not increase the applicable limits of insurance.

POLICY NUMBER: CGD740995705

COMMERCIAL GENERAL LIABILITY
CG 24 04 12 19

THIS ENDORSEMENT CHANGES THE POLICY. PLEASE READ IT CAREFULLY.

WAIVER OF TRANSFER OF RIGHTS OF RECOVERY AGAINST OTHERS TO US (WAIVER OF SUBROGATION)

This endorsement modifies insurance provided under the following:

COMMERCIAL GENERAL LIABILITY COVERAGE PART
ELECTRONIC DATA LIABILITY COVERAGE PART
LIQUOR LIABILITY COVERAGE PART
POLLUTION LIABILITY COVERAGE PART DESIGNATED SITES
POLLUTION LIABILITY LIMITED COVERAGE PART DESIGNATED SITES
PRODUCTS/COMPLETED OPERATIONS LIABILITY COVERAGE PART
RAILROAD PROTECTIVE LIABILITY COVERAGE PART
UNDERGROUND STORAGE TANK POLICY DESIGNATED TANKS

SCHEDULE

Name Of Person(s) Or Organization(s):

Where required by written contract or agreement executed prior to loss (except where not permitted by law).

Information required to complete this Schedule, if not shown above, will be shown in the Declarations.

The following is added to Paragraph 8. Transfer Of Rights Of Recovery Against Others To Us of Section IV - Conditions:

We waive any right of recovery against the person(s) or organization(s) shown in the Schedule above because of payments we make under this Coverage Part. Such waiver by us applies only to the extent that the insured has waived its right of recovery against such person(s) or organization(s) prior to loss. This endorsement applies only to the person(s) or organization(s) shown in the Schedule above.

POLICY NUMBER: CAD740995805

COMMERCIAL AUTO
CA 20 48 10 13

THIS ENDORSEMENT CHANGES THE POLICY. PLEASE READ IT CAREFULLY.

DESIGNATED INSURED FOR COVERED AUTOS LIABILITY COVERAGE

This endorsement modifies insurance provided under the following:

AUTO DEALERS COVERAGE FORM
BUSINESS AUTO COVERAGE FORM
MOTOR CARRIER COVERAGE FORM

With respect to coverage provided by this endorsement, the provisions of the Coverage Form apply unless modified by this endorsement.

This endorsement identifies person(s) or organization(s) who are "insureds" for Covered Autos Liability Coverage under the Who Is An Insured provision of the Coverage Form. This endorsement does not alter coverage provided in the Coverage Form.

This endorsement changes the policy effective on the inception date of the policy unless another date is indicated below.

Named Insured: Cerris Systems, Inc
Endorsement Effective Date: 7/1/2025

SCHEDULE

Name Of Person(s) Or Organization(s):

WHERE REQUIRED BY WRITTEN CONTRACT EXECUTED PRIOR TO LOSS

Information required to complete this Schedule, if not shown above, will be shown in the Declarations.

Each person or organization shown in the Schedule is an "insured" for Covered Autos Liability Coverage, but only to the extent that person or organization qualifies as an "insured" under the Who Is An Insured provision contained in Paragraph A.1. of Section II - Covered Autos Liability Coverage in the Business Auto and Motor Carrier Coverage Forms and Paragraph D.2. of Section I - Covered Autos Coverages of the Auto Dealers Coverage Form.

POLICY NUMBER: CAD740995805

COMMERCIAL AUTO
CA 04 44 10 13

THIS ENDORSEMENT CHANGES THE POLICY. PLEASE READ IT CAREFULLY

WAIVER OF TRANSFER OF RIGHTS OF RECOVERY AGAINST OTHERS TO US (WAIVER OF SUBROGATION)

This endorsement modifies insurance provided under the following:

BUSINESS AUTO COVERAGE FORM
BUSINESS AUTO PHYSICAL DAMAGE COVERAGE FORM
GARAGE COVERAGE FORM
MOTOR CARRIER COVERAGE FORM
TRUCKERS COVERAGE FORM

With respect to coverage provided by this endorsement, the provisions of the Coverage Form apply unless modified by the endorsement.

This endorsement changes the policy effective on the inception date of the policy unless another date is indicated.

Named Insured: Cerris Systems, Inc

Endorsement Effective Date: 7/1/2025

SCHEDULE

Name(s) Of Person(s) Or Organization(s):
WHERE REQUIRED BY WRITTEN CONTRACT OR AGREEMENT EXECUTED PRIOR TO LOSS (EXCEPT WHERE NOT PERMITTED BY LAW).

Information required to complete this Schedule, if not shown above, will be shown in the Declarations.

The **Transfer Of Rights Of Recovery Against Others To Us** condition does not apply to the person(s) or organization(s) shown in the Schedule, but only to the extent that subrogation is waived prior to the "accident" or the "loss" under a contract with that person or organization.

INSTRUCTIONS TO BIDDERS

"Owner(s)" shall mean any, all, or a combination of the City of Lincoln, County of Lancaster, Nebraska, Lincoln-Lancaster County Public Building Commission, and/or the West Haymarket Joint Public Agency.

1. BIDDING PROCEDURE

1.1. Bidders shall use the electronic bid system for submitting solicitation responses and must complete all required fields.

1.2. EBID/IONWAVE REGISTRATION

Bidders must be registered on the Owner's Ebid site to submit a response to any solicitation.

1.2.1 To register in Ebid, click on this link: https://col.ionwave.net/Login.aspx

1.2.2. Click on "Supplier Registration" in blue box and follow the instructions to complete the registration.

1.3. Solicitation responses will not be accepted after the closing time and date.

1.4. Bidders should include any deviations of the solicitation documents and the proposed replacement language on company letterhead and attach in the Response Attachment tab in Ebid. Failure to include deviations with the solicitation response will indicate the Bidder agrees to all terms and conditions outlined in the solicitation documents with no exceptions. The Owner reserves the right to accept or reject the deviations according to the best interests of the Owner. Deviations that are not acceptable to the Owner and not negotiable, may result in the Bidder being deemed as "non-responsive" and rejection of the response.

1.5. Bidders shall not attempt to influence or discuss this solicitation with any Owner employee, elected official, agent, or evaluator other than the Purchasing Staff through the award process.

1.5.1 Failure to follow this requirement may result in immediate disqualification of your response.

1.5.2 From the date the solicitation is issued until the award notification is issued, communication is limited to the Purchasing staff. After the award notification is issued, the Bidder may communicate with individuals of the Owner responsible for negotiating the contract.

1.6. The Owner reserves the right to reject a response, withdraw an award notification, or terminate a contract if it is determined there has been a violation of these purchasing procedures.

1.7. If bidding on a construction contract, the Owner's most current Standard Specifications for Municipal Construction shall apply, found at: https://www.lincoln.ne.gov/Owner/Departments/LTU/Transportation/Standards/Standard-Specs.

2. CLARIFICATION OF BIDDING DOCUMENTS

2.1 Bidders shall promptly notify Purchasing staff of any ambiguity, inconsistency, or error which they may discover upon examination of the bidding documents.

2.2 Questions regarding the meaning, interpretation or clarification of any solicitation provision should be submitted through Ebid under the Questions tab. The Owner is not obligated to respond to questions that are received after the Question Cutoff date and time in Ebid.

2.3 Changes made to the bidding documents may be issued electronically via addendum in Ebid. Addendums are issued by Purchasing prior to the closing date for solicitations which modify or interpret the bidding document by addition, deletion, clarification, or correction.

2.4 Oral interpretations or changes to the bidding documents made in any manner other than written form will not be binding on the Owner; and Bidders shall not rely upon such interpretations or changes.

3. INDEPENDENT PRICE DETERMINATION

3.1 By electronically signing and submitting a response, the Bidder agrees the submitted pricing has been arrived at independently, without consultation, communication, or agreement for the purpose of restricting competition, as to any matter relating to such prices with any other Bidder or with any competitor; unless otherwise required by law, the prices which have been submitted in the response have not been knowingly disclosed by the Bidder prior to the solicitation opening directly or indirectly to any other Bidder or to any competitor; no attempt has been made, or will be made, by the Bidder to induce any person or firm to submit, or not to submit, a response for the purpose of restricting competition.

4. BRAND NAMES/ALTERNATES

4.1 If alternates are allowed, it is the Bidder's responsibility to identify any alternate items and prove to the satisfaction of the Owner that said item is equal to, or better than, the product specified.

4.1.1 Alternate items shall be stated in the appropriate space in Ebid Line Item, or if the Ebid Line Item does not contain blanks for alternates, Bidder should attach a statement in Ebid on Company letterhead identifying the manufacturer and brand name of each proposed alternate, plus a complete description of the alternate items including illustrations, performance test data, and any other information necessary for an evaluation.

4.1.2 Bidders must indicate any variances by item number from the bidding document no matter how slight.

4.2 If alternates are not stated in the response, it will be assumed that the item being provided fully complies with the Owner's solicitation documents.

5. DEMONSTRATIONS/SAMPLES

5.1. If requested by the Owner, Bidders shall provide and/or demonstrate the exact item(s) proposed within seven (7) calendar days from receipt of such request.

5.2. Such demonstration(s) can be at the Owner delivery location or a surrounding community.

5.3. If items are small and mailable and the Bidder is proposing an alternate product, the Bidder shall supply a sample of the exact item. Samples will be returned at Bidder's expense after receipt by the Owner of acceptable goods. The Bidder should indicate how samples are to be returned.

5.4. When requested, samples will be furnished at the Bidder's expense prior to the closing of the solicitation, unless another time is specified. Each sample should be labeled clearly, and identify the Bidder's name, the solicitation number and title, item number, and the brand and model number, if applicable. Samples submitted must be the commodities or equipment which would be delivered if awarded the solicitation.

5.5. The Owner reserves the right to request samples even though this may not have been set forth in the solicitation.

5.6. Samples may be destroyed in testing. If a sample is not destroyed in testing and a Bidder wishes to have the sample returned, it will be returned at the Bidder's expense upon request.

5.7. The sample will not be returned until thirty (30) calendar days after any protest or the execution of a contract. The Bidder shall have ten (10) calendar days to arrange for the return of the sample following any of the above dates. If no request from the Bidder is received within the above dates, the Owner reserves the right to use, donate, or surplus the samples in accordance with the Owner's policies.

6. DELIVERY (Non-Construction)

6.1. The Owner reserves the right to cancel orders, or any part thereof, without obligation, if delivery is not made within the specified time(s).

6.2. All prices shall be based upon inside delivery of the equipment/merchandise F.O.B. Destination to the Owner at the location specified by the Owner, with all transportation charges paid.

6.3. At the time of delivery, a designated Owner employee will sign the invoice/packing slip. The signature will only indicate that the order has been received and the items delivered agree with the delivery invoice. This signature does not indicate all items met specifications, were received in good condition and/or that there is not possible hidden damage or shortages.

7. WARRANTIES AND GUARANTEES

7.1. Warranties, guarantees, and maintenance policies should be uploaded in Ebid in the Response Attachments tab.

7.2. Bid specifications shall set forth warranties and guarantees. If not described therein, then as a minimum requirement of the Owner, the Bidder will guarantee in writing that any defective components discovered within a one (1) year period after the date of acceptance of products shall be replaced at no expense to the Owner. Replacement parts of defective components shall be shipped at no cost to the Owner. Shipping costs for defective parts required to be returned to the Bidder shall be paid by the Bidder. Work performed for services shall include a one (1) year warranty beginning upon completion of services. There shall be an additional one (1) year warranty for defects in services rendered beginning on the date that the defects are corrected.

8. BID SECURITY, (if required)

8.1. Bid security, as a guarantee of good faith, in the form of a certified check, cashier's check, or bid bond, may be required to be submitted with the solicitation, as indicated on the solicitation.

8.1.1. Bid security, if required, shall be in the amount specified in the solicitation. The bid security may be scanned and attached to the Response Attachments section of your response in Ebid. The original bid security should then be sent or delivered to the office of the Purchasing Division, 440 S. 8th St., Ste. 200, Lincoln, NE 68508 within three (3) days of closing.

8.1.2. If the bid security is not received in the office of the Purchasing Division as stated above, the Bidder may be determined to be non-responsive.

8.2. If alternates are submitted, only one bid security will be required, provided the bid security is based on the amount of the highest gross bid.

8.3. Such bid security may be returned to the unsuccessful Bidders when the award of the solicitation is made.

8.3.1. Bid security may be returned to the successful Bidder(s) as follows:

8.3.2. For purchase orders, upon the delivery of all equipment or merchandise, and upon final acceptance by the Owner.

8.3.3. For all other contracts, upon approval by the Owner of the executed contract and bonds.

8.4. Owner shall have the right to retain the bid security of Bidders to whom an award is being considered until either:

8.4.1. A contract has been executed and bonds have been furnished.

8.4.2. The specified time has elapsed so the solicitations may be withdrawn.

8.4.3. All responses have been rejected.

8.4.4. Bid security will be forfeited to the Owner as full liquidated damages, but not as a penalty, if the Bidder fails or refuses to enter a contract on forms provided by the Owner, and/or if the Bidder fails to provide sufficient bonds or insurance within the period as established in this bidding document.

9. REFERENCE CHECKS

9.1. The Owner reserves the right to conduct and consider reference checks. By submitting a response to this solicitation, the Bidder grants the Owner the right to contact or arrange a visit in person with any or all the Bidder's clients. Reference checks may be grounds to deem Bidder not responsible, not award, withdraw an award notification, or rescind the award of a contract.

10. SOLICITATION EVALUATION AND AWARD

10.1. The electronic signature shall be considered an offer on the part of the Bidder. The offer shall be deemed accepted upon issuance by the Owner of purchase orders, contract award notifications, or other contract documents appropriate to the work.

10.2. No response shall be modified or withdrawn for a period of ninety (90) calendar days after closing date and time.

10.3. In case of a discrepancy between the unit prices and their extensions, the unit prices shall govern.

10.4. The solicitation will be awarded to the lowest responsive, responsible Bidder whose offer will be most advantageous to the Owner, and as the Owner deems will best serve the requirements and interests of the Owner.

10.5. The Owner reserves the right to accept or reject any or all responses; to request rebids; to award item-by-item, with or without alternates, by groups, or "lump sum"; to waive minor irregularities; request a best and final offer (BAFO); such as shall best serve the requirements and interests of the Owner.

10.6. To determine if the Bidder has the experience, qualifications, resources, and necessary attributes to provide the quality workmanship, materials and management required by the plans and specifications, the Bidder may be required to complete and submit additional information as deemed necessary by the Owner. Failure to provide the information requested to make this determination may be grounds for a declaration of non-responsive with respect to the Bidder.

10.7. The Owner reserves the right to reject irregular responses that contain unauthorized additions, conditions, alternate responses, or irregularities that make the solicitation incomplete, indefinite or ambiguous.

10.8. If allowed, any governmental agency may piggyback on any purchase order or contract established from this solicitation.

11. EXECUTION OF AGREEMENT

11.1. Depending on the type of service or commodity provided, one of the following methods will be employed.

11.1.1. **PURCHASE ORDER**

A copy of the Bidder's response (or referenced solicitation number) attached and that the same, in all particulars, becomes the contract between the parties hereto that both parties thereby accept and agree to the terms and conditions of said solicitation documents.

11.1.2. **CONTRACT**

11.1.2.1 Owner will prepare and furnish a Contract to the successful Bidder.

11.1.2.2 The successful Bidder shall provide proof of insurance as evidenced by a Certificate of Insurance, along with endorsements and waivers (as required), surety bonds properly executed (as required), and Contract signed and dated.

11.1.2.3 The prepared documents should be returned to the Purchasing Office within 10 days (unless otherwise noted).

11.1.2.4 The Owner will sign and date the Contract when (a), (b), and (c) are completed.

11.1.2.5 Upon approval and signature, the Owner will return one electronic copy to the successful Bidder.

12. LAWS

12.1. The laws of the State of Nebraska shall govern the rights, obligations, and remedies of the parties under this solicitation and any contract reached as a result of this process.

12.2. Bidder agrees to abide by all applicable local, state, and federal laws and regulations, including those concerning the handling and disclosure of private and confidential information from individuals and corporations as to inventions, copyrights, patents, and patent rights.

12.3. If there are any conflicts or inconsistencies between the Bidder's documents and the Owner's documents, the Owner's documents shall control.

13. TAX ASSESSMENT

13.1. Any solicitation for public improvement shall comply with Nebraska Revised Statutes Sections 77-1323 and 77-1324. In that regard, every person, partnership, limited liability company, association or corporation furnishing labor or material in the repair, alteration, improvement, erection, or construction of any public improvement shall sign a certified statement which will accompany the contract. The certified statement shall state that all equipment to be used on the project, except that acquired since the assessment date, has been assessed for taxation for the current year, giving the county where assessed.

14. EQUAL OPPORTUNITY

14.1. The Owner requires compliance with all federal, state, and local laws, rules, and regulations regarding equal opportunity for all Bidders and encourages minority businesses, women's businesses, and locally owned business enterprises to participate in our bidding process.

15. LIVING WAGE, (if applicable)

15.1. The Bidder shall be responsible for determining whether it is subject to the Living Wage ordinance in the event it is awarded the contract.

15.2. If the contract is subject to the Owner's Living Wage pursuant to Section 2.81 of the Lincoln Municipal Code, the Bidder agrees to pay all employees employed in the performance of this contract, a base wage of not less than the Owner's Living Wage. This wage is subject to change every July.

16. INSURANCE

16.1. Bidders shall take special notice of the insurance provisions required for Owner contracts (if applicable, see *Insurance Requirements in the Attachments tab in Ebid*).

17. TAXES AND TAX EXEMPTION CERTIFICATE

17.1. The Owner is generally exempt from any taxes imposed by the state or federal government. A Tax Exemption Certificate will be provided as applicable.

17.2. The Water Division of the City of Lincoln is taxable per Reg. 066.14A and no exemption certificate will be issued.

18. AUDIT

18.1. All parties of any Owner agreement shall be subject to audit and shall make available to a contract auditor, as defined therein, copies of all financial and performance-related records and materials germane to the contract/order, as allowed by law.

19. E-VERIFY

19.1. In accordance with Neb. Rev. Stat. 4-108 through 4-114, the awarded Bidder agrees to register with and use a federal immigration verification system, to determine the work eligibility status of new employees performing services within the state of Nebraska. A federal immigration verification system means the electronic verification of the work authorization program of the Illegal Immigration Reform and Immigrant Responsibility Act of 1996, 8 U.S.C. 1324 a, otherwise known as the E-Verify Program, or an equivalent federal program designated by the United States Department of Homeland Security or other federal agency authorized to verify the work eligibility status of a newly hired employee pursuant to the Immigration Reform and Control Act of 1986. The winning Bidder shall not discriminate against any employee or applicant for employment to be employed in the performance of this section pursuant to the requirements of state law and 8 U.S.C.A 1324b. The winning Bidder shall require any subcontractor to comply with the provisions of this section. For information on the E-Verify Program, go to www.uscis.gov/everify.

WH 26-12 Introduce: 4-23-26

RESOLUTION NO.

BE IT RESOLVED by the Board of Representatives of the West Haymarket Joint Public Agency:

That the attached Contract between the West Haymarket Joint Public Agency and Midwest Storage Solutions, Inc. - Spacesaver, for outdoor furniture for the Pinnacle Bank Arena (Re-bid), for a total amount not to exceed $73,644.75, pursuant to Bid No. 26-018, is hereby approved and the Chairperson of the West Haymarket Joint Public Agency Board of Representatives is hereby authorized to execute said Contract.

Adopted this _____ day of April, 2026.

Introduced by:

_____

Approved as to Form & Legality:

West Haymarket Joint Public Agency
Board of Representatives

_____
Legal Counsel for
West Haymarket Joint Public Agency

_____
Leirion Gaylor Baird

_____
Tim Clare

_____
Tom Beckius

West Haymarket Joint Public Agency Signature Page

CONTRACT
Outdoor Furniture for Pinnacle Bank Arena (Re-bid)
Bid No. 26-018
West Haymarket Joint Public Agency
Midwest Storage Solutions, Inc. - Spacesaver

EXECUTION BY THE WEST HAYMARKET JOINT PUBLIC AGENCY

West Haymarket Joint Public Agency

_____
Leirion Gaylor Baird, Mayor
Chairperson of the West Haymarket Joint Public Agency
Board of Representatives

Approved Order No._____

dated _____

CONTRACT DOCUMENTS

West Haymarket Joint Public Agency
Lincoln, Nebraska

Outdoor Furniture for Pinnacle Bank Arena (Re-bid)
Bid No. 26-018

Midwest Storage Solutions, Inc. - Spacesaver
5845 S. 118th Circle, Omaha, NE 68137
319-830-6277

West Haymarket Joint Public Agency
Lincoln, Nebraska
Contract Agreement

THIS CONTRACT, made and entered into by and between **Midwest Storage Solutions, Inc. – Spacesaver, 5845 S. 118th Circle, Omaha, NE 68137**, hereinafter called the Contractor, and West Haymarket Joint Public Agency, Lincoln, Nebraska, hereinafter called JPA.

WHEREAS, JPA has caused to be prepared, in accordance with law, Specifications, Plans, and other Contract Documents for the Work herein described, and has approved and adopted said documents and has caused to be published an advertisement for and in connection with said Work, to-wit:

Outdoor Furniture for Pinnacle Bank Arena, Bid No. 26-018 (Re-bid)

and,

WHEREAS, the Contractor, in response to such advertisement, has submitted to JPA, in the manner and at the time specified, a sealed Proposal/Supplier Response in accordance with the terms of said advertisement; and,

WHEREAS, JPA, in the manner prescribed by law has examined and canvassed the Proposals/Supplier Responses submitted in response to such advertisement, and as a result of such canvass has determined and declared the Contractor to be the lowest responsible bidder for the said Work for the sum or sums named in the Contractor's Proposal/Supplier Response, a copy thereof being attached to and made a part of this Contract;

NOW, THEREFORE, in consideration of the sums to be paid to the Contractor and the mutual covenants herein contained, the Contractor and JPA have agreed and hereby agree as follows:

1. The Contractor agrees to (a) furnish all tools, equipment, supplies, superintendence, transportation, and other construction accessories, services, and facilities; (b) furnish all materials, supplies, and equipment specified to be incorporated into and form a permanent part of the complete work; (c) provide and perform all necessary labor in a substantial and workmanlike manner and in accordance with the provisions of the Contract Documents; and (d) execute, construct, and complete all Work included in and covered by JPA's award of this Contract to the Contractor, such award being based on the acceptance by JPA of the Contractor's Proposal, or part thereof, as follows:

Agreement to Full Proposal

2. The JPA agrees to pay to the Contractor for the performance of the Work embraced in this Contract, the Contractor agrees to accept as full compensation therefore, the following sums and prices for all Work covered by and included in the Contract award and designated above, payment thereof to be made in the manner provided by JPA:

   The JPA will pay for products/services, according to the Line Item pricing as listed in Contractors Proposal/Supplier Response, a copy thereof being attached to and made a part of this Contract for a total of $73,644.75.

3. EQUAL EMPLOYMENT OPPORTUNITY: In connection with the carrying out of this project, the Contractor shall not discriminate against any employee, applicant for employment, or any other person because of race, color, religion, sex, national origin, ancestry, disability, age or marital status. The Contractor will take affirmative action to ensure that applicants are employed, and that employees are treated during employment, without regard to their race, color, religion, sex, national origin, ancestry, disability, age or marital status. Such action shall include, but not be limited to, the following:

employment, upgrading, demotion or transfer; recruitment or recruitment advertising; layoff or termination; rates of pay or other compensation; and selection for training, including apprenticeship.

4. E-VERIFY: In accordance with Neb. Rev. Stat. 4-108 through 4-114, the contractor agrees to register with and use a federal immigration verification system, to determine the work eligibility status of new employees performing services within the state of Nebraska. A federal immigration verification system means the electronic verification of the work authorization program of the Illegal Immigration Reform and Immigrant Responsibility Act of 1996, 8 U.S.C. 1324 a, otherwise known as the E-Verify Program, or an equivalent federal program designated by the United States Department of Homeland Security or other federal agency authorized to verify the work eligibility status of a newly hired employee pursuant to the Immigration Reform and Control Act of 1986. The Contractor shall not discriminate against any employee or applicant for employment to be employed in the performance of this section pursuant to the requirements of state law and 8 U.S.C.A 1324b. The contractor shall require any subcontractor to comply with the provisions of this section.

5a. TERMINATION FOR CAUSE

a) JPA may terminate the Contract if the Contractor:
   1. Refuses or fails to supply enough properly skilled workers or proper materials;
   2. Fails to make payment to Subcontractors for materials or labor in accordance with the respective agreements between the Contractor and the Subcontractors;
   3. Disregards laws, ordinances, or rules, regulations or orders of a public authority having jurisdiction; or
   4. Otherwise commits a substantial breach of any provision of the Contract Documents.

b) When any of the above reasons exist, JPA without prejudice to any other rights or remedies of JPA may (after giving the Contractor and the Contractor's surety, if any, seven days' written notice) terminate employment of the Contractor. In addition JPA may (subject to any prior rights of the surety):
   1. Take possession of the site and of all materials, equipment, tools, and construction equipment and machinery thereon owned by the Contractor;
   2. Accept assignment of subcontracts; and
   3. Finish the Work by whatever reasonable method JPA may deem expedient.

c) If the Contract is terminated by JPA as provided in this section, Contractor shall not be entitled to receive any further payment until the expiration of 35 days after Final Completion and acceptance of all Work by JPA.

d) If the unpaid balance of the Contract Sum exceeds the cost of completing the Work, including all additional costs and expenses made necessary thereby, including costs for JPA staff time, plus all losses sustained, including any liquidated damages provided under the Contract Documents, such excess shall be paid to Contractor. If such costs, expenses, losses, and liquidated damages exceed the unpaid balance of the Contract Sum, Contractor shall pay such excess to JPA.

e) If, after termination of the Contractor's right to proceed, it is determined that the Contractor was not in default, or that the delay was excusable, the rights and obligations of the parties will be the same as if the termination has been issued for the convenience of JPA.

f) No termination or action taken by JPA after termination shall prejudice any other rights or remedies of JPA provided by law or by the Contract Documents upon such termination; and JPA may proceed against Contractor to recover all losses suffered by JPA.

5b. TERMINATION BY JPA FOR CONVENIENCE

a) JPA may at its option, terminate this Contract in whole or in part at any time without cause by written notice thereof to the Contractor.

b) Upon any such termination, the Contractor agrees to waive any claims for damages, including loss of anticipated profits, on account thereof, and as the sole right and remedy of the Contractor, JPA shall pay Contractor in accordance with this Paragraph. The provisions of the Contract which by their nature survive final acceptance of the Work, shall remain in full force and effect after such termination to the extent provided in such provisions.

c) Upon receipt of any such notice of termination, the Contractor shall, unless the Notice directs otherwise, immediately:

1. Discontinue the Work to the extent specified by JPA;
2. Place no further orders or subcontracts for materials, equipment, services or facilities, except as may be necessary for completion of that portion of the Work, if any, JPA has directed not to be discontinued;
3. Promptly make every reasonable effort to procure cancellation upon satisfactory terms as determined by JPA of all orders and subcontracts not related to that portion of the Work, if any, JPA has directed not to be discontinued;
4. Do only such other activity as may be necessary to preserve and protect work already in progress and to protect materials and plants and equipment on the Project Site or in transit thereto.

d) Upon such termination, the obligations of the Contract shall continue as to portions of the Work already performed and as to bona fide obligations the Contractor assumed prior to the date of termination.

e) Upon termination, JPA shall pay the Contractor the full cost of all Work properly done by the Contractor to the date of termination not previously paid for by JPA. If at the date of such termination the Contractor has properly prepared or fabricated off site any goods for subsequent incorporation in the Work, JPA may direct the Contractor to deliver such goods to the Site or to such other place as JPA may reasonably determine, whereupon JPA shall pay to the Contractor the cost for such goods and materials.

f) Upon such termination, JPA shall pay to Contractor the sum of the following:
1. The amount of the Contract Sum allocable to the portion of the Work properly performed by Contractor as of the date of termination, less sums previously paid to Contractor.
2. Previously unpaid costs of any items delivered to the Project site which were fabricated for subsequent incorporation in the Work.
3. Any proven losses with respect to materials and equipment directly resulting from such termination.
4. Reasonable demobilization costs.

g) The above payment shall be the sole and exclusive remedy to which Contractor is entitled in the event of termination of the Contract by JPA pursuant to this provision; and Contractor will be entitled to no other compensation or damages and expressly waives same.

6. INDEPENDENT CONTRACTOR: It is the express intent of the parties that this contract shall not create an employer-employee relationship. Employees of the Contractor shall not be deemed to be employees of JPA and employees of JPA shall not be deemed to be employees of the Contractor. The Contractor and JPA shall be responsible to their respective employees for all salary and benefits. Neither the Contractor's employees nor JPA's employees shall be entitled to any salary, wages, or benefits from the other party, including but not limited to overtime, vacation, retirement benefits, workers' compensation, sick leave or injury leave. Contractor shall also be responsible for maintaining workers' compensation insurance, unemployment insurance for its employees, and for payment of all federal, state, local and any other payroll taxes with respect to its employees' compensation.

7. FOREIGN ADVERSARY CONTRACTING PROHIBITION ACT CERTIFICATION: In accordance with the Foreign Adversary Contracting Prohibition Act, Neb. Rev. Stat. §73-901 to §73-907, a public entity shall require a company that submits a bid, or proposal, or enters into any contract or contract renewal with any public entity, to certify that the company is not a scrutinized company and will not subcontract with any scrutinized company for any aspect of performance of the contemplated contract; and that any products or services to be provided do not originate with a scrutinized company. As such the Contractor agrees to do one of the following:

(A) If the Contractor is providing technology related goods or services under the Act, Contractor agrees to complete and sign a Certification Form as provided by the JPA certifying that the Contractor is not a scrutinized company and attach it to the Agreement; or

(B) If the Contractor is not providing technology related goods or services under the Act, Contractor agrees to complete and sign a Certification Form as provided by the JPA certifying that the Contractor is not providing such services and is not subject to the Act; or

(C) If the Contractor is providing technology related goods under the Act, and Contractor is a scrutinized company that qualifies under Neb. Rev. Stat. §73-906(2) as an exception for the provision of

manufactured goods only, Contractor agrees to complete and sign a Certification Form as provided by the JPA certifying that the contractor is a scrutinized company that meets the exception provided under the Act.

8. PERIOD OF PERFORMANCE: The contract shall become effective upon execution by both parties. The Final Completion date shall be no later than June 30, 2026.

9. The Contract Documents comprise the Contract, and consist of the following:

1. Contract Terms
2. Supplier Response
3. Project Schedule
4. General Specifications
5. Capitol Terrace Model
6. Furniture Placement
7. Foreign Adversary Prohibition Act Certification Form
8. Insurance Requirements
9. Certificate of Insurance and Endorsements
10. Instructions to Bidders
11. Sales Tax Exemption Forms 13 & 17

* If the project includes paving, water, sewer, sidewalk, lighting or traffic signal work, JPA Standard Specifications for Municipal Construction will apply, which are on file in the office of JPA Clerk. Copies may be obtained at the Office of the City Engineer.

These Contract Agreements, together with the other Contract Documents herein above mentioned, form this Contract, and they are as fully a part of the Contract as if hereto attached or herein repeated.

The Contractor and JPA hereby agree that all the terms and conditions of this Contract shall by these presents be binding upon themselves, and their heirs, administrators, executors, legal and personal representatives, successors, and assigns.

Vendor Signature Page

CONTRACT
Outdoor Furniture for Pinnacle Bank Arena (Re-bid)
Bid No. 26-018
West Haymarket Joint Public Agency
Midwest Storage Solutions, Inc. - Spacesaver

EXECUTION BY CONTRACTOR

IF A CORPORATION:

Attest:

_____ Seal
Secretary

Midwest Storage Solutions Inc
Name of Corporation

5845 S 118th Circle
Address

By: Perry Haubenschild
Duly Authorized Official

President
Legal Title of Official

IF OTHER TYPE OF ORGANIZATION:

_____
Name of Organization

_____
Type of Organization

_____
Address

By: _____
Member

By: _____
Member

IF AN INDIVIDUAL:

_____
Name

_____
Address

_____
Signature

26-018

Midwest Storage Solutions, Inc. - Spacesaver

Supplier Response

Event Information

Number:	26-018
Title:	Outdoor Furniture for Pinnacle Bank Arena (Rebid)
Type:	Notice to Bidders
Issue Date:	1/16/2026
Deadline:	2/17/2026 02:00 PM (CT)
Notes:	The West Haymarket Joint Public Agency, Lincoln, Nebraska, a municipal corporation, hereinafter referred to as “Owner”, is requesting bids from qualified companies, hereinafter referred to as “Vendor” or “Bidder” for the delivery and installation of outdoor furniture for Pinnacle Bank Arena (PBA).

Contact Information

Contact:	Jessica Mehrhoff, Assistant Purchasing Agent
Address:	Purchasing 440 S. 8th Street Suite 200 Lincoln, NE 68508
Phone:	(402) 441-8333
Email:	jmehrhoff@lincoln.ne.gov

Midwest Storage Solutions, Inc. - Spacesaver Information

Contact: Melissa Vander Schaaf
Address: 5845 s 118th cir.
Omaha, NE 68137
Phone: (319) 830-6277

By submitting your response, you certify that you are authorized to represent and bind your company.

Sheri Shipman
Signature

sheris@mss-1.com
Email

Submitted at 2/17/2026 12:30:33 PM (CT)

Requested Attachments

Company Vitae and References

MSS Vitae and References.pdf

Attach company information describing company experience, a list of staff who will be involved in this project and their contact information, and at least 3 current references for other customers where similar services have been provided.

Proposed Design & Floorplans

Fermob product cut sheets-finish options.pdf

Attach a proposed design plan, including product descriptions and literature or a link to product information online. A photo of each furniture item proposed must be included. Include 3D images of proposed workstations for private and shared offices or cubicles. Provide furniture drop-ins on floorplans.

Project Schedule Form

Pinnacle Bank Arena Schedule.pdf

Attach the Project Schedule Form found in the Attachments tab to this bid.

Manufacturer Warranties

Fermob Warranty.pdf

Attach warranty information for each product proposed

Foreign Adversary Contracting Prohibition Act Form

Foreign Adversary Contracting Prohibition Forn Act.pdf

Complete and upload the certification form in the Attachments tab in Ebid.

U.S. Citizenship Attestation Form

US Citizenship Attestaion Form.pdf

Complete and upload the U.S. Citizenship Attestation Form from the Attachment tab.

Bid Attributes

1	**Instructions to Bidders** I acknowledge reading and understanding the Instructions to Bidders. ☑ Yes
2	**Insurance Requirements and Endorsements** Contractor agrees to provide required insurance coverage and comply with each provision listed in the **Insurance Requirements** attached in EBid. Submission of the **Certificate of Insurance** and the applicable **endorsements**. **Bidders are strongly encouraged to send the insurance requirements and endorsement information to their insurance agent prior to bid closing in order to expedite the contract execution process.** ☑ Yes

3 Specifications

I acknowledge reading and understanding the specifications.

☑ Yes

4 Bid Documents

I acknowledge and accept that it is my responsibility as a Bidder to promptly notify the Purchasing Department Staff prior to the close of the bid of any ambiguity, inconsistency or error which I may discover upon examination of the bid documents including, but not limited to the Specifications.

☑ Yes

5 Drawings

I acknowledge reading and understanding the Project Drawings.

☑ Yes

6 U.S. Citizenship Attestation

Is your company legally considered an Individual or Sole Proprietor: YES or NO

As a Vendor who is legally considered an Individual or a Sole Proprietor I hereby understand and agree to comply with the requirements of the United States Citizenship Attestation Form, available at: http://www.sos.ne.gov/business/notary/citizenforminfo.html

All awarded Vendors who are legally considered an Individual or a Sole Proprietor must complete the form and submit it with contract documents at time of execution.

If a Vendor indicates on such attestation form that he or she is a qualified alien, the Vendor agrees to provide the US Citizenship and Immigration Services documentation required to verify the Vendor's lawful presence in the United States using the Systematic Alien Verification for Entitlements (SAVE) Program.

Vendor further understands and agrees that lawful presence in the United States is required and the Vendor may be disqualified or the Contract terminated if such lawful presence cannot be verified as required by Neb. Rev. Stat. 4-108.

Understand and agree, signed document attached.

7 Warranty

I warrant that all equipment and supplies offered will conform to the design, specifications, samples, or other descriptions contained in this bid, will be free from defects in workmanship and material and to the extent that I know, or have reason to know of the purpose for which the supplies are intended, will be fit and sufficient for such purpose as deemed applicable. The warranty required here under must provide all parts, equipment, transportation, technical assistance, labor and supervision necessary to correct any deficiency resulting from manufacturing defects without charge for a period of one (1) year after the date of final acceptance of all materials, equipment, and services furnished by successful bidder. Thereafter the manufacturer's standard warranty will apply.

☑ Yes

8 Pricing

Net costs of all goods and services requested shall include shipping F.O.B. destination and inside delivery, and include tariffs, unboxing/uncrating, design fee, assembly, removal of packing material and debris, and set in place.

*The **discount off list price** shall remain fixed for the first year of the contract.* After the initial one-year period, any request for an increase must be submitted in writing to the Purchasing Department a minimum of 90 days prior to the end of the current contract period with the request on company letterhead with an authorized signature and documentation for such increase.

The City reserves the right to deny any requested price increase. No price increases are to be billed to the Department prior to written amendment of the contract by the parties.

The City will be given full proportionate benefit of any decreases for the term of the contract.

☑ Yes, I agree to hold discount off list pricing

9 Bid Pricing

Bid pricing shall be held until May 1, 2026 or later due to the approval process by the West Haymarket JPA board. The WHJPA meeting is scheduled for April 23, 2026, at which time they will have the option to approve the contract & purchase.

☑ Yes, I agree the pricing will be held until May 1.

10 Quantities

I acknowledge that the quantities listed for each line item are an estimated amount. The City/County does not guarantee any dollar amount or order quantities for the term of the contract.

☑ Yes

11 Assignment

Vendor shall not assign, transfer, convey, sublet, or otherwise dispose of any award or any or all of its rights, title, or interest therein, or delegate the duties hereunder without the prior written consent of the City.

☑ Yes

12 Bid Award

I acknowledge and understand that the City, County and/or Public Building Commission reserve the right to award bids item-by-item, with or without alternates/options, by groups, or "lump sum" such as shall best serve the requirements and interests of the City, County and/or Public Building Commission.
a) Do you agree and understand? Yes/No_____

b) Is your pricing based on all-or-nothing basis? Yes/No_____

Yes, we acknowledge and understand. No, our pricing is based on all or nothing award.

13 Tax Exempt Certification Forms

Materials being purchased in this bid are tax exempt and unit prices are reflected as such. A Purchasing Agent Appointment form and an Exempt Sales Certificate form shall be issued with contract documents. (Note: State Tax Law does not provide for sales tax exemption for proprietary functions for government, thereby excluding the purchases of pipes to be installed in water lines and purchase of water meters.)

☑ Yes

14 Subcontractor/Installer

List applicable third party subcontractors or installers you plan to use for this project. If none, enter "N/A".

N/A

15 Storage Prior to Installation

The Vendor or its subcontractor(s) shall be responsible for storing the furniture for up to thirty (30) days prior to installation. If construction delays, or other circumstances outside of the supplier or the Owner's control occur that will extend the need to store furniture outside of the thirty day time frame, the awarded supplier will promptly provide a quote for storage for the additional expected time frame.

☑ Yes

16 Purchase Order, Contract and Delivery Contact

The City/County Purchasing Department issues Purchase Orders and Contracts via email to a designated contact person of the awarded Vendor. This designee will be the primary contact with the department through the delivery of the product/services. Please list the name, email address and phone number of the person who will be the contact person for the contract/PO to be awarded.

Sheri Shipman, sheris@mss-1.com, 402-908-0366

17 **Ethics in Government Contracting**

The Owner reserves the right to reject proposals, overturn an award notification and/or terminate a contract if it is discovered that a Proposer commits or has committed ethical violations, such as but not limited to, the following offenses:
1. Offering or giving, directly or indirectly, a bribe, fee, commission, compensation, gift, gratuity, or anything of value to any person or entity in an attempt to influence the procurement process.
2. Utilize the services of lobbyists, attorneys, political activists, or consultants to influence or subvert the procurement process.
3. Being considered for, presently being, or becoming debarred, suspended, ineligible, or excluded from contracting with any local, state, or federal entity.
4. Submitting a proposal on behalf of another party or entity.
5. Collusion with any person or entity to influence the procurement process, submit sham proposals, preclude bidding, fix pricing or costs, create an unfair competitive advantage, subvert the bid process, or prejudice the Owner.

☑ No offenses have been committed in this bid.

18 **Foreign Adversary Contracting Prohibition Act**

I hereby understand and agree to comply with the requirements of the Foreign Adversary Prohibition Act and have completed and uploaded the certification form in the Response Attachments tab in Ebid.

If a Vendor indicates on such certification form that the company is a scrutinized company, the Vendor must meet the exception requirements under the Act and agrees to provide documentation to verify the exception requirements with the bid response.

Vendor further understands and agrees that any scrutinized company that violates the certification may be subject to action by the Nebraska Attorney General, civil penalty, and such violation may void the contract.

☑ Foreign Adversary Contracting Prohibition Act

Bid Lines

1 3.1.1 Outdoor Armchair

Quantity: 56 UOM: EA Unit Price: $389.03 Total: $21,785.68

Item Notes: Include tariffs in the line item cost.

Item Attributes

1. Manufacturer Name

Enter the manufacturer name

Fermob USA

2. Manufacturer Product Line

Enter the manufacturer product number

Luxembourg 4102474

3. Lead Time

Enter the lead time in number of days/weeks

14-16 weeks

4. Discount Percentage

Enter the percentage of discount off list price which will be held for one (1) year.

33.5%

2 3.1.2 Outdoor Barstool

Quantity: 30 UOM: EA Unit Price: $428.93 Total: $12,867.90

Item Notes: Include tariffs in the line item cost.

Item Attributes

1. Manufacturer Name

Enter the manufacturer name

Fermob USA

2. Manufacturer Product Line

Enter the manufacturer product number

Luxembourg 410347

3. Lead Time

Enter the lead time in number of days/weeks

14-16 weeks

4. Discount Percentage

Enter the percentage of discount off list price which will be held for one (1) year.

33.5%

3 3.1.3 Outdoor Lounge Chair

Quantity: 8 UOM: EA Unit Price: $492.10 Total: $3,936.80

Item Notes: Include tariffs in the line item cost.

Item Attributes

1. Manufacturer Name

Enter the manufacturer name

Fermob USA

2. Manufacturer Product Line

Enter the manufacturer product number

Luxembourg 421147

3. Lead Time

Enter the lead time in number of days/weeks

14-16 weeks

4. Discount Percentage

Enter the percentage of discount off list price which will be held for one (1) year.

33.5%

4 3.1.4 Outdoor Cafe Table - Square

Quantity: 8 UOM: EA Unit Price: $1,157.10 Total: $9,256.80

Item Notes: Include tariffs in the line item cost.

Item Attributes

1. Manufacturer Name

Enter the manufacturer name

Fermob USA

2. Manufacturer Product Line

Enter the manufacturer product number

Luxembourg 413947

3. Lead Time

Enter the lead time in number of days/weeks

14-16 weeks

4. Discount Percentage

Enter the percentage of discount off list price which will be held for one (1) year.

33.5%

5 3.1.5 Outdoor Cafe Table - Round

Quantity: 14 UOM: EA Unit Price: $994.18 Total: $13,918.52

Item Notes: Include tariffs in the line item cost.

Item Attributes

1. Manufacturer Name

Enter the manufacturer name

Fermob USA

2. Manufacturer Product Line

Enter the manufacturer product number

Luxembourg 414847

3. Lead Time

Enter the lead time in number of days/weeks

14-16 weeks

4. Discount Percentage

Enter the percentage of discount off list price which will be held for one (1) year.

33.5%

6 3.1.6 Outdoor Dining Table

Quantity: 3 UOM: EA Unit Price: $1,695.75 Total: $5,087.25

Item Notes: Include tariffs in the line item cost.

Item Attributes

1. Manufacturer Name

Enter the manufacturer name

Fermob USA

2. Manufacturer Product Line

Enter the manufacturer product number

Luxembourg 413247

3. Lead Time

Enter the lead time in number of days/weeks

14-16 weeks

4. Discount Percentage

Enter the percentage of discount off list price which will be held for one (1) year.

33.5%

7 3.1.7 Outdoor Cocktail Table

Quantity: 4 UOM: EA Unit Price: $485.45 Total: $1,941.80

Item Notes: Include tariffs in the line item cost.

Item Attributes

1. Manufacturer Name

Enter the manufacturer name

Fermob USA

2. Manufacturer Product Line

Enter the manufacturer product number

Sixties 172147

3. Lead Time

Enter the lead time in number of days/weeks

14-16 weeks

4. Discount Percentage

Enter the percentage of discount off list price which will be held for one (1) year.

33.5%

8 Installation

Quantity: 1 UOM: EA Unit Price: $4,850.00 Total: $4,850.00

Item Notes: Enter all costs associated with installation, including delivery, unboxing/uncrating, assembly, removal and disposal of packing material, and clean up of debris. Tariffs should be included in the line item costs, not as part of the installation cost.

Response Total: $73,644.75

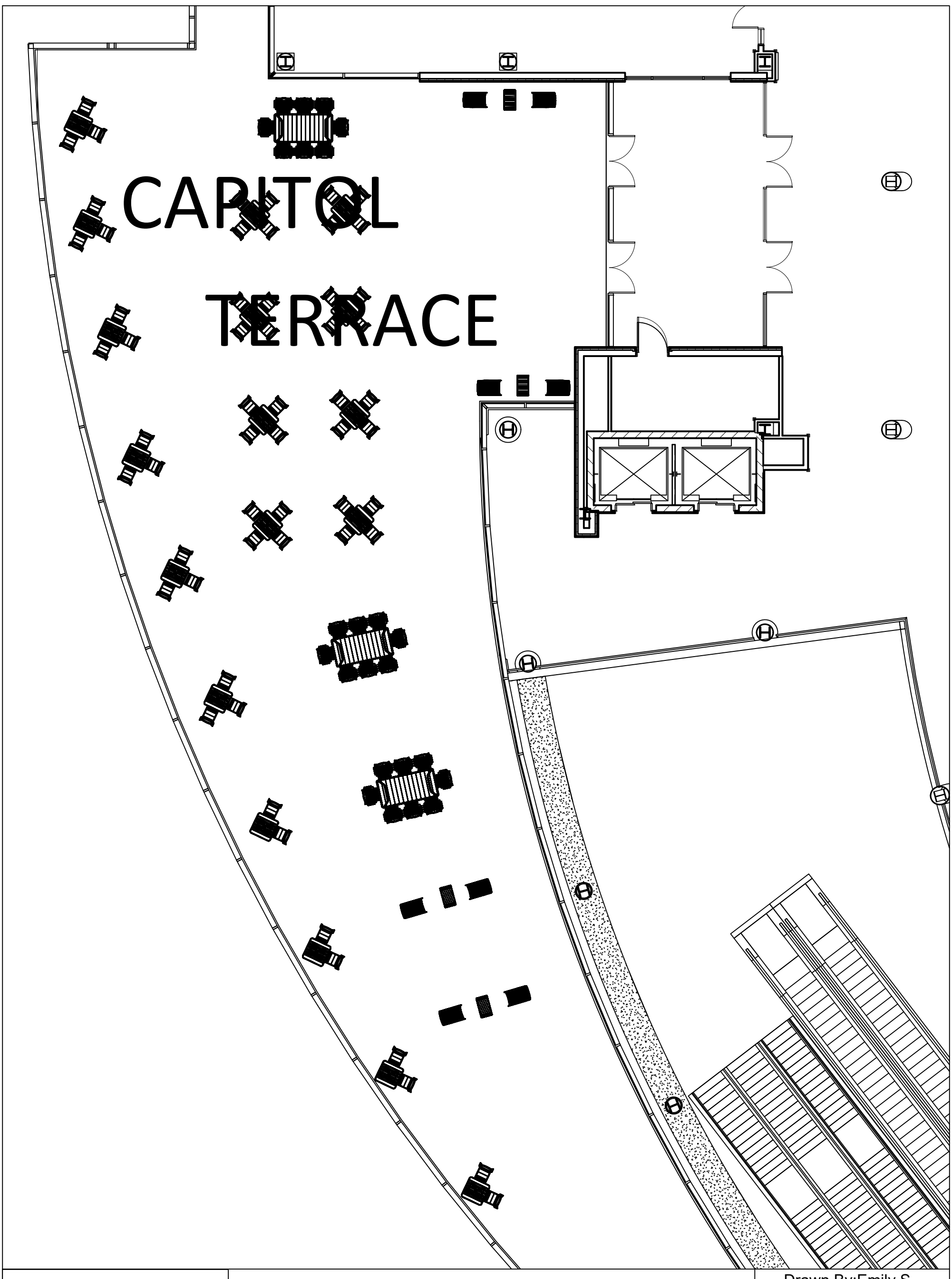

Contract Furniture

PINNACLE BANK ARENA
OUTDOOR FURNITURE
OVERALL SPACE PLAN FLOOR 3
LINCOLN NE

Drawn By:Emily S	
Scale: 3/32"=1'0"	
Plan View	
Date: 02.17.2026	
PRELIM DWG	REV 0

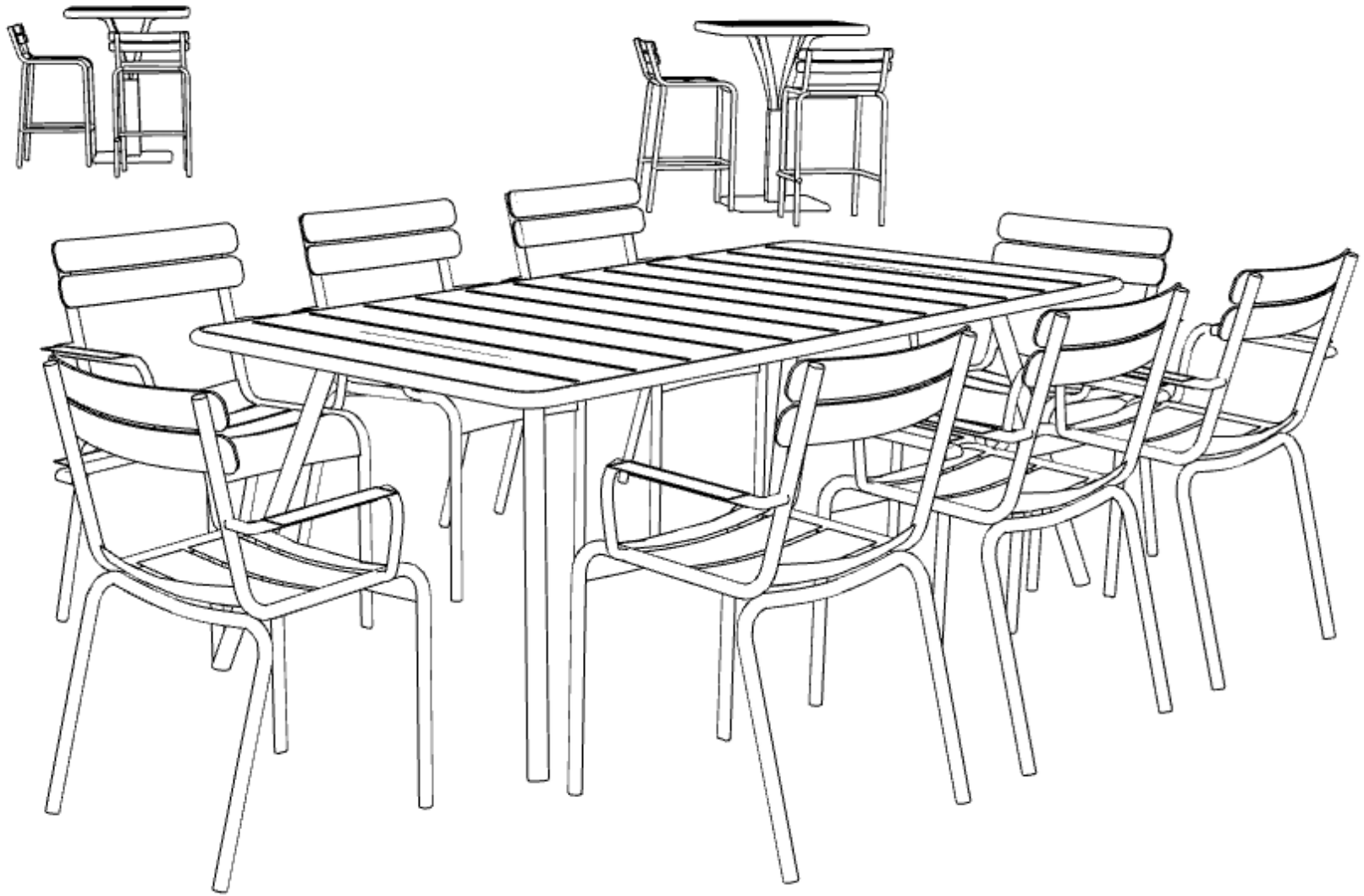



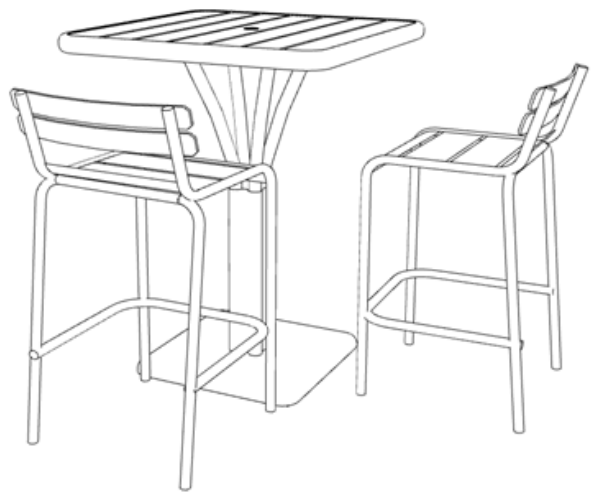





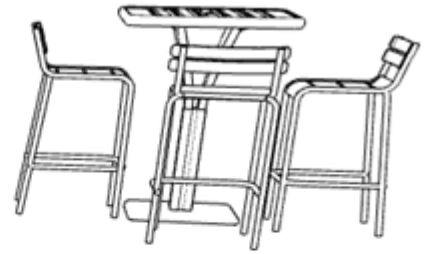

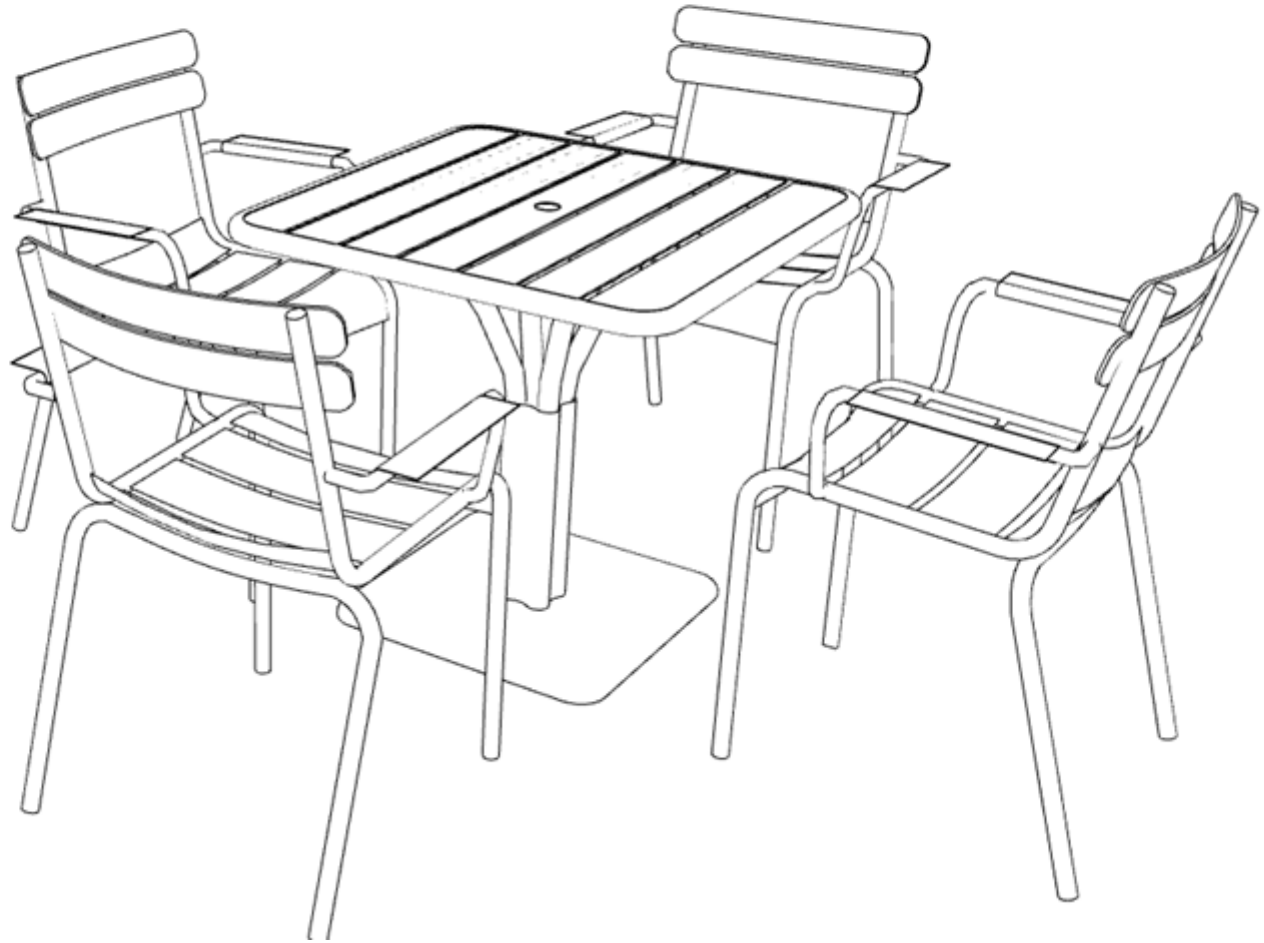















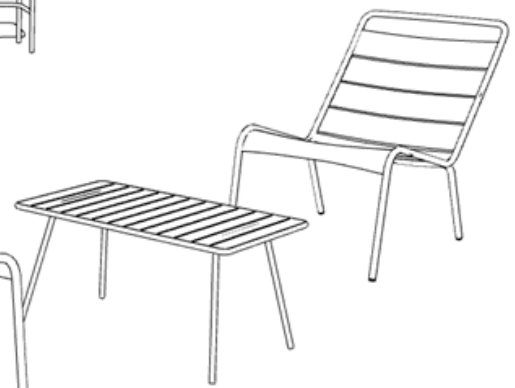

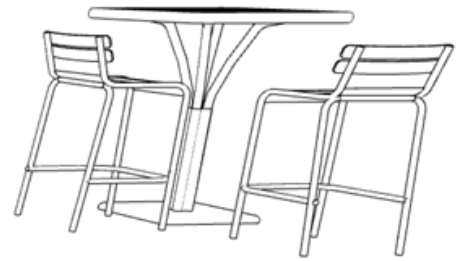

Fermob

LUXEMBOURG

ARMCHAIR

Design: **FRÉDÉRIC SOFIA**



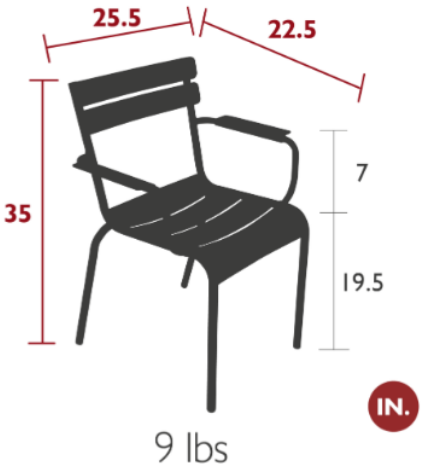

RESIDENTIAL CONTRACT INTENSIVE 9 IPAC

- aluminium tubular Frame

Curved aluminium slats seat
Curved aluminium slats backrest
aluminium slats armrests

- Pads: Silence
- Stacking Oui
- Stacking capacity: 8 x
- Height – stacked: 46 in.

ÉCO IMPACT A

Eco Impact Score : See the evaluation

LUXEMBOURG

HIGH STOOL

Design: **FRÉDÉRIC SOFIA**



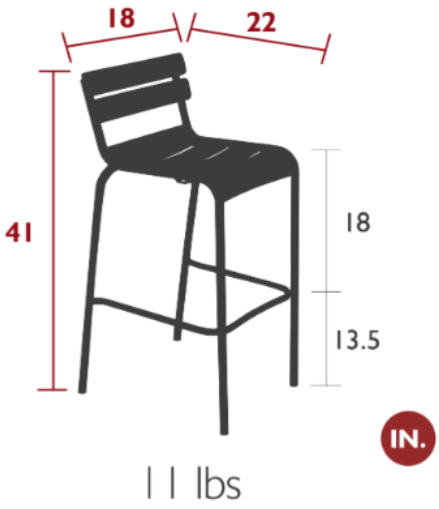

RESIDENTIAL CONTRACT INTENSIVE

9 IPAC

- aluminium tubular Frame

Curved aluminium slats seat

Curved aluminium slats backrest

- Pads: Silence
- Stacking Oui
- Stacking capacity: 6 x
- Height – stacked: 47 in.

ÉCO IMPACT A

Eco Impact Score : See the evaluation

LUXEMBOURG

LOUNGE CHAIR

Design: **FRÉDÉRIC SOFIA**



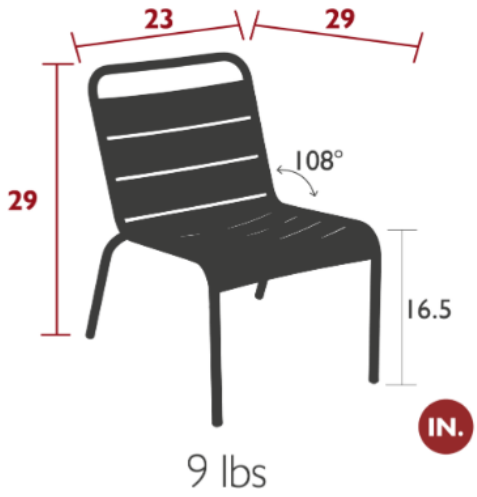

RESIDENTIAL CONTRACT INTENSIVE

9 IPAC

- aluminium tubular Frame

Curved aluminium slats seat

Curved aluminium slats backrest

- Pads: Silence
- Stacking Oui
- Stacking capacity: 6 x
- Height – stacked: 40 in.

ÉCO IMPACT A

Eco Impact Score : See the evaluation

LUXEMBOURG

PEDESTAL TABLE 36 X 36 IN.

Design: **FRÉDÉRIC SOFIA**



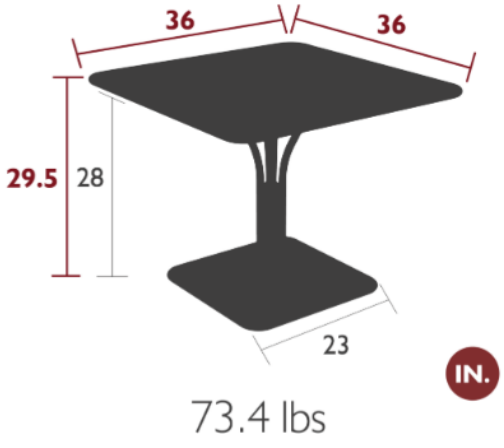

73.4 lbs

RESIDENTIAL CONTRACT INTENSIVE

9 IPAC

- aluminium slats table top

aluminium tubular base

- Shape: Square
- Spaces/guests: 4
- Electro-galvanised steel ballast, aluminium base
- Diameter – pole (max) : Ø 1,5 in.

LUXEMBOURG

HIGH PEDESTAL TABLE 31.5 X 31.5 IN.

Design: **FRÉDÉRIC SOFIA**



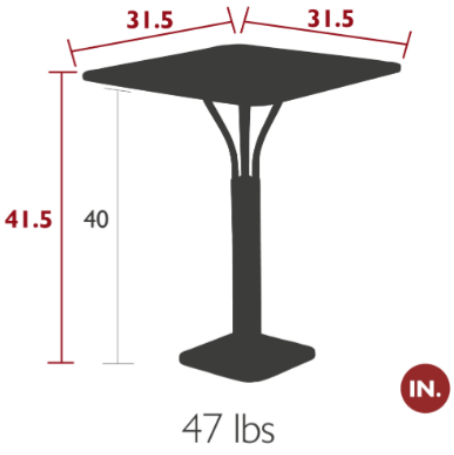

RESIDENTIAL CONTRACT INTENSIVE 9 IPAC

- aluminium slats table top

aluminium tubular base

steel ballast, aluminium ballast

- Shape: Square
- Spaces/guests: 4
- Diameter – pole (max) : Ø 1,5 in.

ÉCO IMPACT C

Eco Impact Score : See the evaluation

LUXEMBOURG

TABLE 81.5 X 39.5 IN.

Design: **FRÉDÉRIC SOFIA**

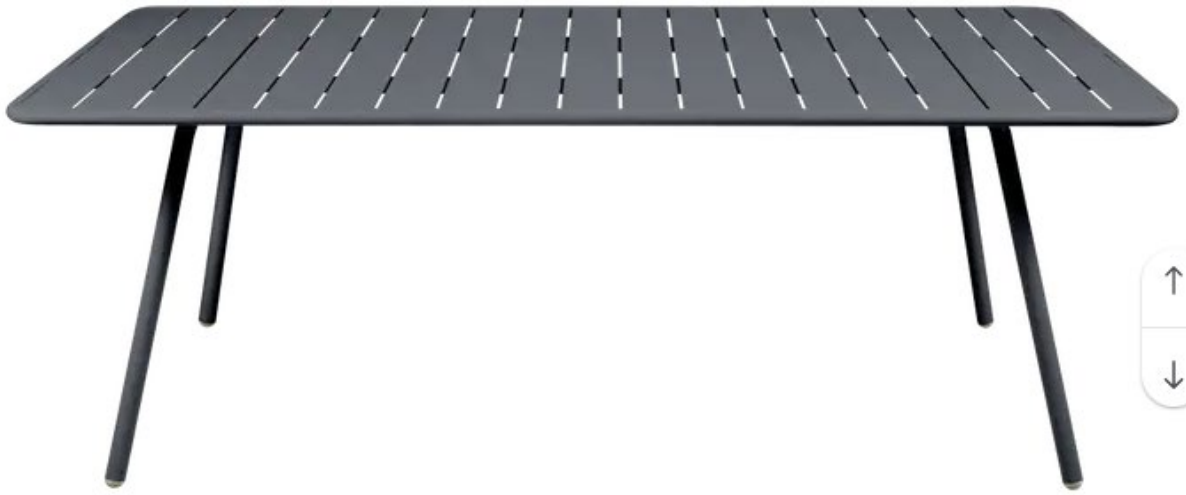

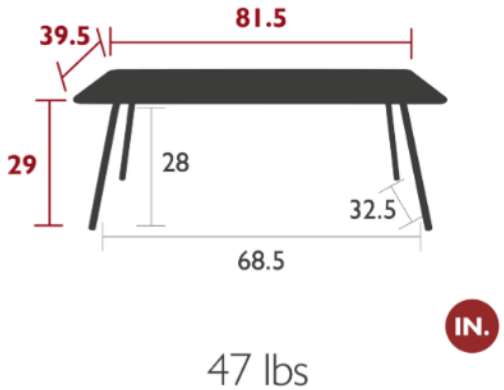

IN.

47 lbs

RESIDENTIAL CONTRACT INTENSIVE 9 IPAC

- aluminium slats table top

aluminium tubular base

- Shape: Rectangular
- Spaces/guests: 8

ÉCO IMPACT C+

Eco Impact Score : See the evaluation

SIXTIES

LOW TABLE 30 X 22 IN.

Design: **FRÉDÉRIC SOFIA**



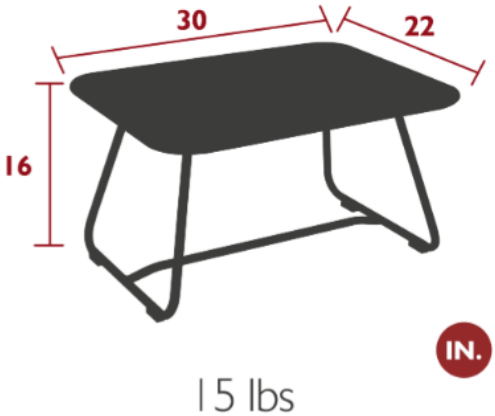

15 lbs

RESIDENTIAL CONTRACT INTENSIVE 8 IPAC

- steel sheet table top

steel tubular base

- Shape: Rectangular
- Aluminum frame beneath table top

ÉCO IMPACT A

Eco Impact Score : See the evaluation

Color

Anthracite



CORPORATE OVERVIEW

Incorporated in 1997, Midwest Storage Solutions, Inc. (MSS) is headquartered in Omaha, NE., with satellite offices in Des Moines and Cedar Rapids Iowa. Every Business is unique and so are their needs. With over 20 years of service Midwest Storage Solutions' experts will find the right solution for you. With the help of our dedicated Furniture Team, massing over 50 years combined contract furniture experience we can provide you with quality design solutions and products that fit your budget and environment. We look forward to working with you on this project.

CORPORATE OVERVIEW

Furniture Sales Consultant- Sheri Shipman

Director of Furniture and Sales-Laura Armentrout

Designer-Emily Sterry

Order Coordinator-Kyle Roloff

Project Manager-John Bogeman

President-Perry Habenschild

REFERENCES

MECA (City of Omaha)

Sidney Gnann 402-960-9548 sgnann@omahameca.com

City of Council Bluffs

Vincent Martorello 712-890-5291 vmartorello@councilbluffs.ia.gov

Dundee Bank

Jeff Royal 402-504-4000 jroyal@dundeebanking.com

MSS Contract Furniture

Fermob Warranty

THE FURNITURE WARRANTY

When we design our products, we pay special attention to three key aspects:

- making sure the piece will continue to fulfill its intended purpose for years to come
- anticipating how it will age as time passes
- designing it so it is suited to our customers' requirements

As a manufacturer, we have a duty to warrant our products.

We never stop listening to our customers. That is why we have amended our warranty to reflect painstaking laboratory testing and customer feedback.

Fermob's structural warranty means that products will remain fit for the purpose for which they were designed. The structural warranty covers all functional aspects of the product such as welding, fasteners, rivets, and folding.

Fermob's finish warranty covers premature and abnormal deterioration in the appearance of the product's materials, such as fading. The speed at which a product ages depends on how carefully it is treated by customers. Please read the exclusions so you know how to care for and maintain the products.

Warranty by raw material

	ALUMINUM PRODUCTS
STRUCTURAL WARRANTY	3 YEARS
FINISH WARRANTY	2 YEARS



3. **Intensive Contract**: mobile product, not fixed to the ground, designed for commercial use in unsupervised public spaces such as public parks, highway rest areas, recreation facilities and public or corporate squares that are accessible for extended hours.

This warranty begins from the original purchase date and is at the manufacturer's sole discretion. Remedies include replacement, refund or prorated refund determined by length of use and severity of the defect. Any claim must be supported by the purchase receipt and photos.

THE WARRANTY DOES NOT COVER:

- Damaged, converted, or modified furniture.
- Furniture not used as per Fermob's recommendations.
- Any damage arising from insufficient care, or from failure to comply with the supplied instructions and advice for receiving, assembling, using, and maintaining the furniture. Furniture should NOT be stored using plastic or any other material trapping moisture on the product.
- Rings or stains (including stains related to a combination of humidity retention + heat, organic materials such as bird droppings, sap, food or leaves).
- General wear and tear or natural fading of the materials used.
- Chairs and benches should be used for sitting on the seat only. Leaning back on two legs is considered hazardous and damages arising from such are not covered. Tables should be used as designed and not for standing or sitting.
- Corrosion originating from scratches or abrasions that result from general wear and tear and which cannot be removed via standard cleaning and maintenance processes.
- Minor spots of rust under table tops and seats or on bases. This is a natural outcome expected on products made of steel and can be treated using the maintenance tools made available to customers by Fermob. This treatment should not be delayed or rust will worsen.
- The corrosion of stainless steel parts due to use in a confined, and/or chlorinated environment.
- Corrosion of steel furniture (including stainless steel furniture) as a result of use in a coastal environment.
- Any changes in the visual appearance of wood that are directly linked to aging. As wood is a living material, the appearance of its surface changes naturally over time.

Project Schedule

Description	Plan Start	Plan End
Bid Due	02/17/2026	
Project Awarded *(Per Bid Attributes on IONWAVE)*	04/23/2026	
Post Award Owner/MSS Meeting to walk site, and review final project schedule/timeline	04/27/2026	
Project Materials Ordered	04/30/2026	
Material Lead Time* (Currently 14-16 weeks)	08/20/2026	09/03/2026
Material Delivered to Site/Material Installation/Product Recycling - Due to event scheduling we are providing a 1 week installation window to complete this installation. *This may be completed sooner but will solidify this during our Post Award Owner/MSS Meeting to take place on 4/27/2026 per the above schedule.*	08/20/2026	08/27/2026
Post Installation Walkthrough	08/27/2026	08/28/2026
Punch Item Completion, if necessary	08/31/2026	09/30/2026

GENERAL SPECIFICATIONS
BID NO. 26-018
Outdoor Furniture for Pinnacle Bank Arena (Rebid)

1. GENERAL INFORMATION

1.1 The City of Lincoln West Haymarket JPA, hereinafter referred to as "Owner", is requesting bids from qualified companies, hereinafter referred to as "Vendor" or "Bidder" for the supply and installation of outdoor furniture for Pinnacle Bank Arena.

1.2 The budgeted amount for this project is a not-to-exceed amount of $95,000.00.

1.3 Vendors should include all costs associated with the labor supervision, materials, tools, supplies, permits, and licenses required to perform the services requested in these specifications.

1.4 Any mention of compliance with the General Specifications shall also mean compliance according to the terms and conditions of all other documents attached to or referenced in the solicitation. In the event of a conflict, the terms and conditions of these General Specifications shall control.

1.5 A contract/purchase order will be awarded to the lowest cost, responsible, responsive Vendor whose bid substantially meets all of the required specifications, timeline, performance, terms, and conditions as defined in this request.

1.6 The Owner reserves the right to approve adjustments to the contract/purchase order should there be a substantial change in the nature of the work involved. Such adjustments must be made in the form of a written contract amendment signed by both parties at the time of the change.

1.7 Deviations from these Specifications or any other bid document must be documented on Company Letterhead and attached to the Supplier Response section of your Ebid response and shall be submitted to the Purchasing Division in writing prior to the close of the bid. An addendum will be issued in Ebid with approval or denial of Vendor request.

1.8 **All inquiries regarding these specifications shall be directed via e-mail to Jessica Mehrhoff, Asst. Purchasing Agent (jmehrhoff@lincoln.ne.gov).**

1.8.1 All communication must go through the City/County Purchasing office. No representative of the Bidder's company shall discuss this bid solicitation with any Owner employee, evaluation team member, Project Manager, Architect/Engineering firm, subcontractor, or elected official. Failure to follow this requirement may result in immediate disqualification of your bid.

1.8.2 All general inquiries regarding these specifications shall be submitted in Ebid via the Questions tab. All inquiries must be submitted to the Purchasing Office at least five (5) calendar days prior to the bid close. These inquiries and responses shall be distributed to prospective bidders electronically in Ebid.

1.9 Vendors shall submit their bid and all requested supporting documents via the City of Lincoln/Lancaster County Purchasing Ebid system. To submit a bid, the Vendor must be registered in Ebid.

- To register, go to the City of Lincoln website at https://www.lincoln.ne.gov,and type "bid" into search box.
- CLICK ON Bids and Contracts,
- CLICK ON Supplier Registration,
- Enter information as required.

All fields marked with an asterisk must be completed to register.

2. QUALIFICATIONS OF THE BIDDER

2.1 The Owner may investigate as deemed necessary to determine the ability of the Vendor to perform the required work, and the Vendor shall furnish to the Owner all such information and data for this purpose.

2.2 No Vendor will be considered who is not at present providing the specified services, and who cannot demonstrate to the satisfaction of the Owner, his/her ability to satisfactorily perform the work in accordance with the requirements of this specification and standards of the industry.

2.3 Vendor shall provide at least three (3) references upon request of the Owner.

3. SCOPE OF WORK/BASIS OF DESIGN

3.1 The Owner is soliciting quotes for outdoor furniture to include the following specific chairs and tables:

3.1.1 Outdoor Armchair

3.1.1.1 Stackable Armchair
3.1.1.2 Powder Coated Aluminum on Frame, Seat, and Back
3.1.1.3 Color - Graphite
3.1.1.4 Arms
3.1.1.5 Approximate Weight - 16lbs
3.1.1.6 Seated height tables and chair
3.1.1.7 Approximate Size - 22.75”w, 24.5”d,33.75”h, 17.5”sh
3.1.1.8 QTY – 56
3.1.1.9 Exhibit A

3.1.2 Outdoor Barstool

3.1.2.1 Barstool Chair
3.1.2.2 Powder Coated Aluminum on Frame, Seat, and Back
3.1.2.3 Color - Graphite
3.1.2.4 Approximate Weight - 16.2lbs
3.1.2.5 Bar-height tables and chairs
3.1.2.6 Approximate Weight - 19.75”w,25.25”d, 46”h, 30.5sh
3.1.2.7 QTY – 30
3.1.2.8 Exhibit B

3.1.3 Outdoor Lounge Chair

3.1.3.1 Outdoor Lounge Chair
3.1.3.2 Powder Coated Aluminum on Frame, Seat, and Back
3.1.3.3 Color - Graphite
3.1.3.4 Approximate Weight - 21.8lbs
3.1.3.5 Approximate Size - 29.25”w, 25.5”d,28”h, 15.25”sh
3.1.3.6 QTY – 8
3.1.3.7 Exhibit C

3.1.4 Outdoor Café Table – Square

3.1.4.1 Café Table Square, Round Base
3.1.4.2 Approximate Size - Top: 36”w, 1 3/4 “ Thick, –
3.1.4.3 Powder Coated Aluminum
3.1.4.4 Color – Graphite
3.1.4.5 Approximate Size Base: 28 ½”h, 24” dia Demi-Sec Grande,
3.1.4.6 Approximate weight - 82lbs
3.1.4.7 Adjustable Leveling Glides
3.1.4.8 QTY – 8
3.1.4.9 Exhibit D

3.1.5 Outdoor Bar Table - Round

3.1.5.1 Approximate size - Top: 36”w, 1 3/4 “ Thick,
3.1.5.2 Powder Coated Aluminum

3.1.5.3 Color – Graphite
3.1.5.4 Approximate size - Base: 42 ½"h, 24" dia Demi-Sec Grande, Powder Coated Steel Plate
3.1.5.5 Approximate weight - 84lbs
3.1.5.6 Adjustable Leveling Glides
3.1.5.7 QTY – 14
3.1.5.8 Exhibit E

3.1.6 Outdoor Dining Table
3.1.6.1 Approximate -80"w, 40"d, 28 ¼"h
3.1.6.2 Powder Coated Frame & Inset Aluminum Slats
3.1.6.3 Color - Graphite
3.1.6.4 Approximate weight -74lbs
3.1.6.5 Adjustable Leveling Glides
3.1.6.6 QTY – 3
3.1.6.7 Exhibit F

3.1.7 Outdoor Cocktail Table
3.1.7.1 Approximate Size -26 ½" dia, 16 ½"h
3.1.7.2 Powder Coated Frame Aluminum Top + Base
3.1.7.3 Color – Graphite
3.1.7.4 Approximate weight - 16.75lbs
3.1.7.5 Adjustable Leveling Glides
3.1.7.6 QTY – 4
3.1.7.7 Exhibit G

3.2 **Quality Requirements:**
3.2.1 Durable/sturdy materials,
3.2.2 Weather-resistant,
3.2.3 Wind and sun-damage resistant,
3.2.4 Robust warranty coverage.
3.2.4.1 Coverage of 12 years or more/lifetime warranty on metal components is preferred.

3.3 **Tariffs, Shipping & Installation:**
3.3.1 Tariffs, shipping, and installation costs MUST be included in the bid line items.

4. DELIVERY AND INSTALLATION

4.1 Delivery Location:
Pinnacle Bank Arena
400 Pinnacle Arena Drive
Lincoln, NE 68508
4.2 Delivery to loading dock.
4.3 Delivery and installation shall be between the hours of 8:00 am to 4:30 pm, Monday through Friday, and must work around event schedules.
4.4 The awarded Vendor must coordinate with the Owner prior to delivery/installation with a minimum of twenty-four (24) hour notice.

5. PRODUCT WARRANTIES

5.1 Manufacturer's warranties should be submitted as part of the Bidder's response in the Response Attachments tab of Ebid.
5.2 Refer to drawings for layout, quantity, and locations of items. Bidders must propose pricing for correct quantities, including all parts and pieces required for assembly and installation. The awarded bidder is responsible for confirming all field measurements prior to submitting a final quote for an Owner purchase order.

6. PROJECT CONDITIONS

6.1 Awarded Vendor shall not deliver or install products until the Owner authorizes access to the project site. Conduct work so the Owner and any applicable tenants will not be disrupted.

6.2 A staging area, if available, must be approved by the Owner's Representative.

6.3 The Vendor takes full responsibility for all their employees and any subcontractors who are hired to work on the project. The Vendor shall maintain existing functions at the facility and protect the public, employees, and buildings against damage during all portions of the project. Any damage done to the surrounding area that is not part of this project will be immediately repaired by the Vendor at no charge to the Owner.

6.4 Vendor shall not store products, tools, or supplies in an area other than what is designated as a staging area. Vendors are responsible for protecting walls, elevators, and flooring from any damage resulting from subcontractors and installation equipment.

7. PROJECT TIMELINE

7.1 Installation shall be completed by **June 1, 2026** and the punch list shall be completed before **June 30, 2026**. Final Completion shall be defined as the time when all furniture and accessories are installed, and the Owner's Representative has signed off on the final punch list.

8. REMOVAL, DISPOSAL AND SITE RESTORATION

8.1 The Vendor shall remove from the site and dispose of all material, debris, installation materials, and adhesives in accordance with all Local, State, and Federal regulations.

8.2 Vendors are strongly encouraged to recycle metal, concrete, and any other material in order to reduce the amount of waste going to the City Landfill.

8.3 Vendors must comply with the City of Lincoln Municipal Code 8.32.040, which bans recyclable cardboard from the City Landfill effective April 1, 2018.

9. PAYMENT

9.1 In full consideration for the goods or services ("Deliverables") provided by Vendor, Owner(s) shall pay or cause to be paid to Vendor the invoiced amount within thirty (30) days after Owner's receipt of an accurate invoice and all requested supporting documentation from Vendor.

9.2 The work shall be completed according to industry standards with approval of completion and final payment being made by the Owner's Representative.

9.3 At no time will the Owner make payment for work that has not been completed or approved.

10. EVALUATION CRITERIA

10.1 At the sole discretion of the Owner, a contract will be awarded to the lowest, responsible, responsive Vendor whose bid substantially meets all the required specifications, duties, and terms and conditions as defined in this request.

10.2 General evaluation of bids will consist of the following:

10.2.1 The lowest responsible, responsive bid that will be most advantageous to the Owner, and as the Owner deems will best serve the requirements and interests of the Owner.

- Ability to provide labor and services as required in the Specifications or approved alternate/substitution.
- Deviations from the General Requirements and Specifications.
- Information obtained from any reference checks that may be performed.

- Evaluations of Alternates and Options: If Alternate items are proposed, the Owner will compare the pricing of all Vendors for each Line Item and make the award that is in the best interest of the Owner and is determined to be the best value.

11. <u>BASIS OF DESIGN</u>

11.1 For style reference only.

Exhibit A – Outdoor Chair



Exhibit B – Outdoor Barstool



Exhibit C - Outdoor Lounge Chair



Exhibit D – Outdoor Café Table – Square



Exhibit E - Outdoor Bar Table – Round



Exhibit F - Outdoor Dining Table



Exhibit G - Outdoor Cocktail Table



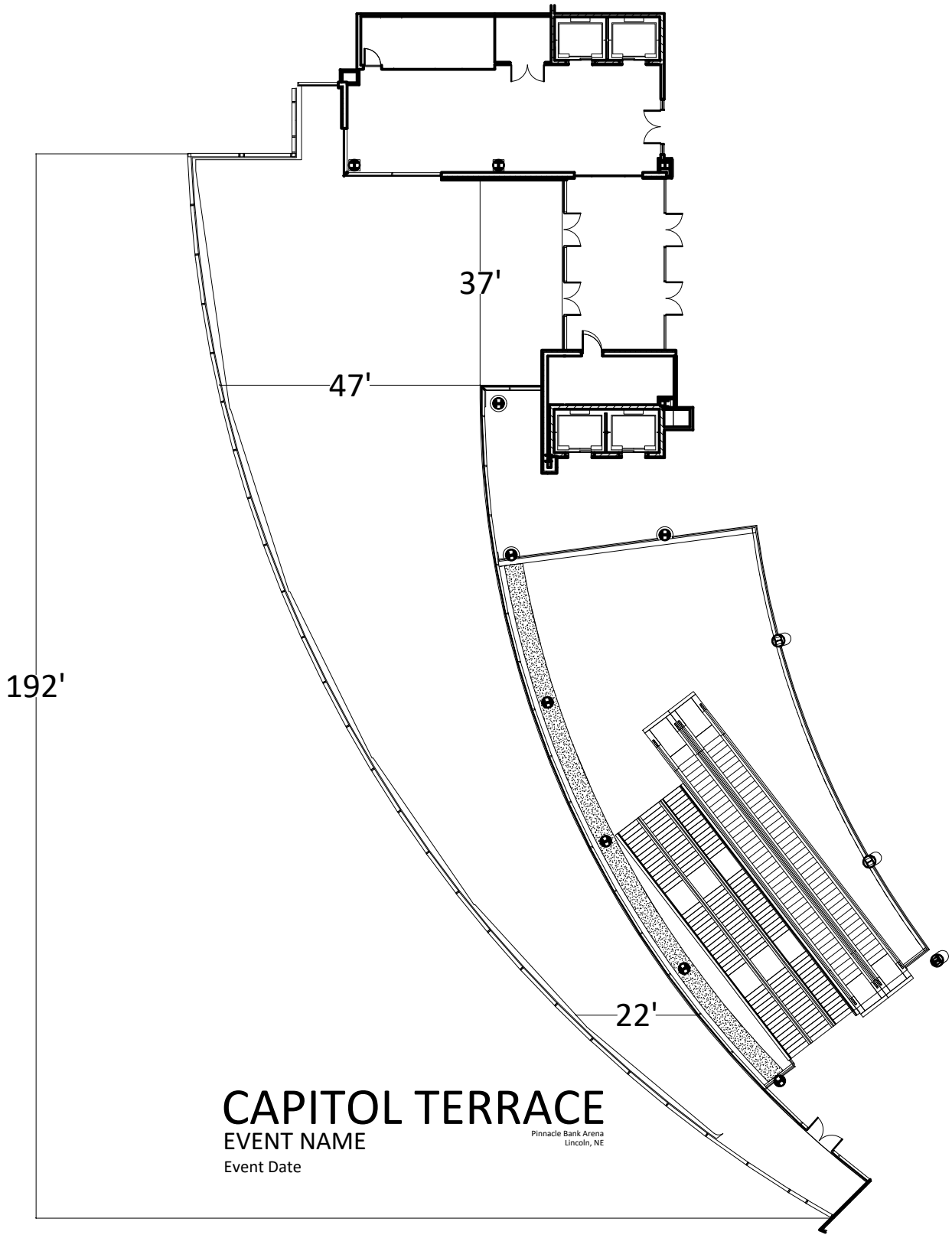

CAPITOL TERRACE

EVENT NAME

Event Date

Pinnacle Bank Arena
Lincoln, NE

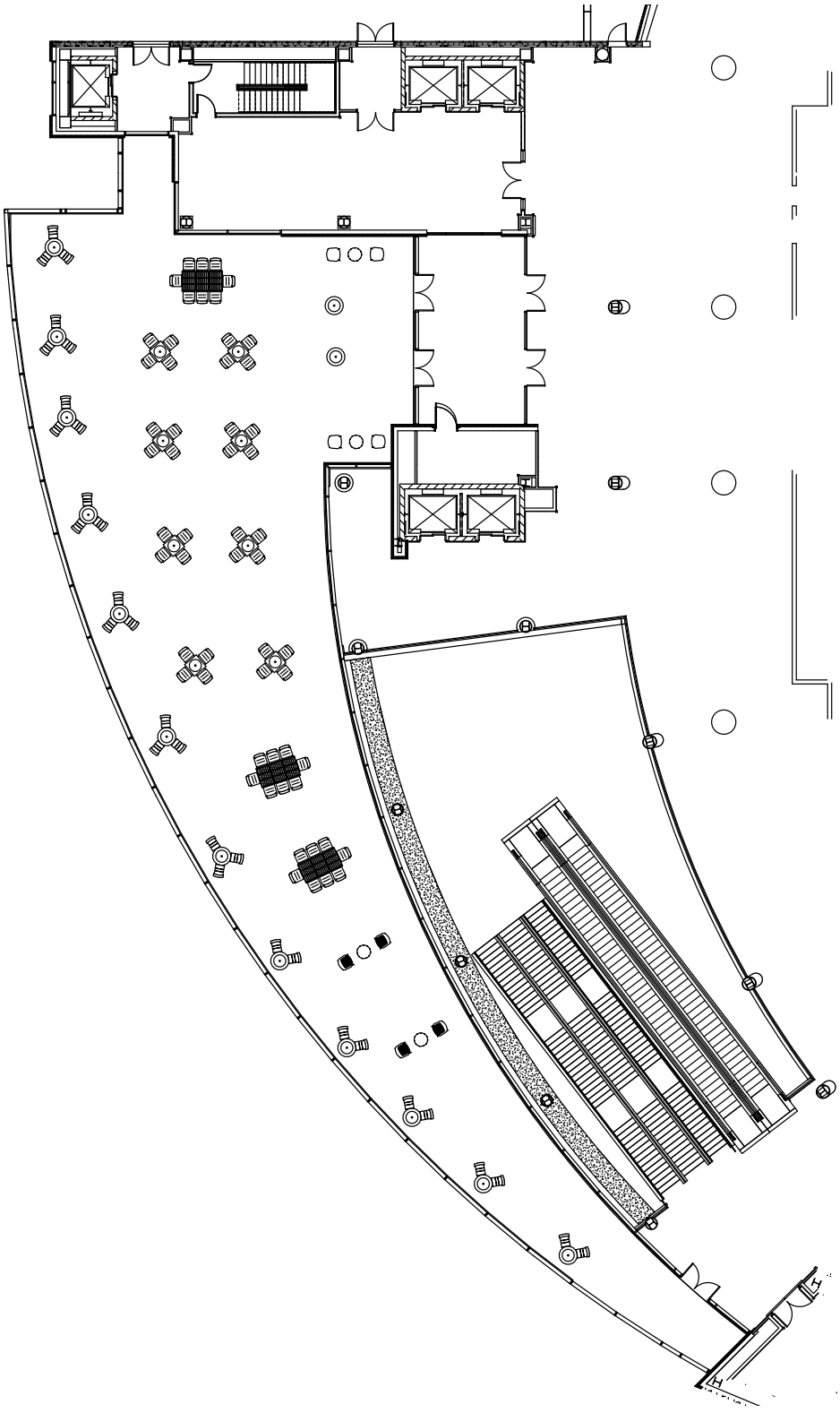

FOREIGN ADVERSARY CONTRACTING PROHIBITION ACT
CERTIFICATION FORM FOR
TECHNOLOGY RELATED PRODUCT OR SERVICES

For the purposes of complying with the Foreign Adversary Contracting Prohibition Act ("the Act"), Neb. Rev. Stat. §73-901 to §73-907, I attest and certify as follows:

Name of Company MIDWEST STORAGE SOLUTIONS

Check all that apply:

☒ I am authorized to attest and certify as the owner of the Company, in whole or in part, or as an authorized representative of the Company, to make the certifications required herein.

☐ The Company is providing technology related products and/or services to the public entity and is not a scrutinized company as defined in the Act; it is not subcontracting with a scrutinized company under the Act; and the technology related products and/or services provided herein do not originate with a scrutinized company under the Act.

☒ The Company is not providing technology related goods or services as defined under the Act.

☐ The Company is a scrutinized company and has entered into an Agreement or an Agreement Renewal with the public entity to provide a technology related good manufactured by a scrutinized company that meets the exception for the provision of a technology related good by a scrutinized company.

☒ I hereby attest and certify on behalf of the Company that the responses and information provided on this form are true, complete, and accurate. The Company understands that any scrutinized company that violates this Act or that violates the certification may be subject to action by the Nebraska Attorney General, civil penalty, and that such violation may void the contract.

PRINT NAME: Perry James Haubenschild
(First, Middle, Last)

SIGNATURE: [signature]

TITLE: President

DATE: 3-2-26

Insurance Requirements

Submitted on	30 October 2025, 2:50PM
Receipt number	2259
Related form version	18

The requirements herein apply to contracts to be issued by the City of Lincoln, Lancaster County, the Lincoln-Lancaster County Public Building Commission, and the West Haymarket Joint Public Agency. For purposes of certificates, endorsements and other proof required herein, only include the entity issuing the contract.

DEFINITIONS: For purposes of these Requirements, the following definitions apply:

- "**Agreement**" shall mean the contract between the Owner and the Contractor into which these Insurance Requirements are incorporated by reference.
- "**City**" shall mean the City of Lincoln, NE.
- "**COI**" shall mean a Certificate of Insurance.
- "**Contractor**" shall mean the individual, company, etc. being hired to perform the Work under the Agreement. Contractor shall include all owners, officers, employees, agents, and subcontractors and employees of any of them.
- "**County**" shall mean the County of Lancaster, Nebraska.
- "**Owner(s)**" shall mean any, all, or a combination of the City of Lincoln, NE, County of Lancaster, Nebraska, Lincoln-Lancaster County Public Building Commission, and/or the West Haymarket Joint Public Agency and their elected and appointed officials, officers, employees, agents, contractors, and consultants.
- "**PBC**" shall mean the Lincoln-Lancaster County Public Building Commission.
- "**Site**" shall mean the location the Work is being completed and/or delivered to.
- "**WHJPA**" shall mean the West Haymarket Joint Public Agency.
- "**Work**" shall mean the project being completed, products being delivered, and/or services being provided as contemplated in the Agreement.

OWNERS: The Insurance Requirements apply to the following:	WHJPA
PROVISIONS:	3. Commercial General Liability 4. Automobile Liability 5. Workers' Compensation

Contractor shall comply with the following provisions:

1. Insurance; Coverage Information

- A. The Contractor shall, prior to beginning work, satisfy all provisions of these Insurance Requirements and shall provide proof of insurance coverage in a form satisfactory to the Owner, which shall not unreasonably withhold approval. Contractor shall comply with these Insurance Requirements, including maintaining all coverages required by these Insurance Requirements, at all times the Work is being done pursuant to the Agreement.
- B. Contractor's insurance shall be primary and non-contributory with any insurance coverage maintained by the Owner. Owner's insurance policies, if any, operate secondary, in excess, separately and independently from policies required to be provided by Contractor. The policies shall be written for not less than the limits of liability required herein. If Contractor maintains higher limits than the minimums shown, the Owner requires and shall be entitled to the higher limits. Any available insurance proceeds in excess of the specified minimum limits of insurance and coverage shall be available to the Owner.

Deductibles/Retentions: Deductibles/Retentions above $25,000.00 shall not be permitted unless written consent is given by the Owner prior to close of an RFP or bid, or upon execution of the Agreement if a formal bid or RFP is not issued.
Owner has sole and exclusive discretion to reject deductibles/retentions that do not meet Owner's satisfaction.
Self-Insurance: In the event Contractor is self-insured for any insurance coverages required in this Agreement, Contractor is required to complete a Self-Insured Certification. If Contractor is self-insured for Workers Compensation, Contractor shall provide Owner a copy of Nebraska Certificate of Self-Insurance for Workers' Compensation.

Owner(s) checked below shall be listed as the Certificate Holder on the COI using the following address: 555 S. 10th St., Lincoln, NE 68508

West Haymarket Joint Public Agency

---

2. Certificates

- A. The Contractor shall provide to Owner, in a form acceptable to Owner, a COI demonstrating the coverage required herein and include copies of all necessary endorsements, waivers, or other documents required by these Insurance Requirements before being permitted to begin the Work pursuant to this Agreement.

---

3. Commercial General Liability: The Contractor shall have, maintain, and provide proof of Commercial General Liability Insurance.

- A. **Basis**: Occurrence basis.
- B. **Limits**: Not less than $1,000,000 combined single limit (CSL) each occurrence; $2,000,000 general aggregate and $2,000,000 products-completed operations aggregate.
- C. **Coverage**: Coverage shall include: Premises-Operations, Products/ Completed Operations, Contractual, Broad Form Property Damage, and Personal and Advertising Injury. The required insurance must include coverage for all projects and operations by or on behalf of Contractor or similar language that meets the approval of the Owner, which approval shall not be unreasonably withheld. Blanket contractual liability coverage, to the extent permitted by law, including but not limited to coverage of Contractor's contractual indemnity obligations in this agreement. Policy shall have a Cross-Liability/Separation of Insureds Clause specifying the insureds' protection under the policy as if each insured had a separate policy, with the exception of the limits of liability and any rights or duties that are designated to be for the first named insured only.
- D. **Additional Insured Endorsement Form**: The Contractor shall name the Owner as additional insured on Contractor's Commercial General Liability policy.
- E. **Waiver of Subrogation/Waiver of Right of Recovery Endorsement Form**: Contractor shall have policy endorsed with a waiver of subrogation/waiver of right of recovery in favor of Owner.

---

4. Automobile Liability: The Contractor shall have, maintain, and provide proof of Automobile Liability insurance.

- A. **Basis**: Occurrence basis.
- B. **Limits**: Not less than $1,000,000 CSL per accident. Auto Liability shall not be subject to an aggregate.
- C. **Coverage**: Coverage shall include liability arising out of the ownership, maintenance, or use of any motor vehicle, including Owned, Leased, Hired and Non-Owned.
- D. **Additional Insured Endorsement Form**: The Contractor shall name the Owners as additional insured on Contractor's Automobile Liability policy.
- E. **Waiver of Subrogation/Waiver of Right of Recovery Endorsement Form**: Contractor shall have policy endorsed with a waiver of subrogation/waiver of right of recovery in favor of Owner.

---

5. Workers' Compensation; Employers' Liability: The Contractor shall have, maintain, and provide proof of Workers' Compensation insurance.

- A. **Limits:** Workers' Compensation coverage not less than statutory requirements under the laws of the State of Nebraska and any other applicable State where Work may be performed. Employer's Liability coverage with limits of not less than $500,000 each accident or injury shall be included.
- B. **Waiver of Subrogation/Waiver of Right of Recovery Endorsement Form:** Contractor shall have policy endorsed with a waiver of subrogation/waiver of right of recovery in favor of Owner. The Contractor shall have its Workers' Compensation insurance carrier, or, if the Contractor is self-insured, then the Contractor itself shall, waive its subrogation rights/rights of recovery against the Owner and shall provide to Owner, in a form acceptable to Owner, a written document, signed by an authorized Officer of the Contractor confirming Contractor has waived their right of subrogation/waived their right of recovery.
- C. Sole proprietors and certain very small entities may be exempt from these requirements and it is the obligation of the Contractor to submit documentation to the Owner of the basis for any such exemption. Contractor will not hire/engage any employees or independent contractors without procuring a Workers Compensation policy and providing proof to the Owner.

Subcontractors: The Contractor shall ensure that all tiers of Contractor's subcontractors comply with insurance requirements identical to the Insurance Requirements between the Contractor and Owner. Contractor shall provide, upon Owner's request, all documentation evidencing such compliance, to Owner on behalf of Contractor and Contractor's subcontractors.

Cancellation/Renewal Notice: Contractor's policies must contain a provision or endorsement that the coverage afforded will not be canceled, materially changed, non-renewed or aggregate limits exhausted until at least 30 days prior written notice has been given to Contractor. Within three days of receipt of any such written notice from insurer, Contractor shall provide a copy of the notice to Owner. If coverage required under this Agreement is cancelled or non-renewed, Contractor shall provide evidence of replacement coverage, with no lapse in coverage between the policies. Contractor shall provide, prior to expiration of any policy(ies), certificates of insurance and endorsement forms evidencing renewal insurance coverages as required in this Agreement.

Owner's Option: Owner may purchase and maintain at Owner's expense, liability insurance. Contractor cannot rely upon Owner's liability policy(ies) for any of Contractor's insurance obligations required herein.

Umbrella or Excess Liability: The Contractor may use an Umbrella, Excess Liability, or similar coverage to supplement the primary insurance stated above in order to meet or exceed the minimum coverage levels required by this Agreement provided such umbrella/excess coverage is not more restrictive than the primary coverage. Such coverage shall be excess of the Commercial General Liability, Auto Liability and Employer's Liability. If the Contractor is required to have, maintain and provide proof of Garage Liability, the Umbrella/Excess Liability shall also be excess of Garage Liability.

Minimum Rating - Insurer: All insurance coverage are to be placed with insurers authorized to do business in the State of Nebraska and must be placed with an insurer that has an A.M. Best's Rating of no less than “A-“ VIII, unless Owner has expressly approves in writing.
Reservation of Rights: The Owner reserves the right to require a higher limit of insurance or additional coverages when the Owner determines that a higher limit or additional coverage is required to protect the Owner or the interests of the public.
Sovereign Immunity: Nothing contained in this clause or other clauses of this Agreement shall be construed to waive the Sovereign Immunity of the Owner.
No Waiver by Owner: Failure of the Owner to object to the form or content of the certificate or endorsement or to demand such proof as is required herein shall not constitute a waiver of any insurance requirement set forth herein.
Failure of Owner to demand such certificates of insurance, endorsements or other evidence of the Contractor’s full compliance with these insurance requirements, or failure of Owner to identify any deficiency in compliance from the evidence provided, shall not be construed as a waiver of the Contractor’s obligation to obtain and maintain such insurance at all tiers.
Claims-made Tail Coverage: Any liability insurance arranged on a claims-made basis, will require an Extended Reporting coverage for the duration specified or the maximum time period the Contractor's insurer will provide, if less than the duration specified. Contractor will be responsible for furnishing certification of Extended Reporting coverage as described or continuous "claims made" liability coverage for the additional period. Continuous "claims made" coverage is acceptable in lieu of Extended Reporting coverage, provided the retroactive date is on or before the effective date of this Agreement and there is no prior or pending date added to the policy after the inception of this Agreement.

QUESTIONS
Consult with your insurance agent or broker on how to acquire the required coverages, endorsements, and waivers needed for your Agreement.
For additional information or questions concerning coverage or acceptable forms, Contractor may contact the Purchasing Division at 402-441-8103, or the Department that issues the Agreement. For general questions regarding Insurance Requirements, please contact the City of Lincoln Risk Management at 402-441-7671 or County of Lancaster, Nebraska’s Risk Management at 402-441-6510, as appropriate.

E-mail Address (Internal use only) rweiss@pinnaclebankarena.com

CERTIFICATE OF LIABILITY INSURANCE

DATE (MM/DD/YYYY): 3/2/2026

THIS CERTIFICATE IS ISSUED AS A MATTER OF INFORMATION ONLY AND CONFERS NO RIGHTS UPON THE CERTIFICATE HOLDER. THIS CERTIFICATE DOES NOT AFFIRMATIVELY OR NEGATIVELY AMEND, EXTEND OR ALTER THE COVERAGE AFFORDED BY THE POLICIES BELOW. THIS CERTIFICATE OF INSURANCE DOES NOT CONSTITUTE A CONTRACT BETWEEN THE ISSUING INSURER(S), AUTHORIZED REPRESENTATIVE OR PRODUCER, AND THE CERTIFICATE HOLDER.

IMPORTANT: If the certificate holder is an ADDITIONAL INSURED, the policy(ies) must have ADDITIONAL INSURED provisions or be endorsed. If SUBROGATION IS WAIVED, subject to the terms and conditions of the policy, certain policies may require an endorsement. A statement on this certificate does not confer rights to the certificate holder in lieu of such endorsement(s).

PRODUCER	CONTACT NAME: Tonya Wagner	
INSPRO, a Marsh & McLennan Agency LLC, Company 4000 Pine Lake Road Lincoln NE 68506	PHONE (A/C, No, Ext): 402-483-4500	FAX (A/C, No):
	E-MAIL ADDRESS: tonya.wagner@marshmma.com	

INSURED	INSURER(S) AFFORDING COVERAGE	NAIC #
Midwest Storage Solutions Inc (MIDWSTO-01) 5845 S 118th Circle Omaha NE 68137	INSURER A : Atlantic States Insurance Comp	22586
	INSURER B : DONEGAL MUTUAL INSURANCE COMPA	13692
	INSURER C :	
	INSURER D :	
	INSURER E :	
	INSURER F :	

COVERAGES **CERTIFICATE NUMBER:** 1013319570 **REVISION NUMBER:**

THIS IS TO CERTIFY THAT THE POLICIES OF INSURANCE LISTED BELOW HAVE BEEN ISSUED TO THE INSURED NAMED ABOVE FOR THE POLICY PERIOD INDICATED. NOTWITHSTANDING ANY REQUIREMENT, TERM OR CONDITION OF ANY CONTRACT OR OTHER DOCUMENT WITH RESPECT TO WHICH THIS CERTIFICATE MAY BE ISSUED OR MAY PERTAIN, THE INSURANCE AFFORDED BY THE POLICIES DESCRIBED HEREIN IS SUBJECT TO ALL THE TERMS, EXCLUSIONS AND CONDITIONS OF SUCH POLICIES. LIMITS SHOWN MAY HAVE BEEN REDUCED BY PAID CLAIMS.

INSR LTR	TYPE OF INSURANCE	ADDL INSD	SUBR WVD	POLICY NUMBER	POLICY EFF (MM/DD/YYYY)	POLICY EXP (MM/DD/YYYY)	LIMITS	
A	X COMMERCIAL GENERAL LIABILITY CLAIMS-MADE [X] OCCUR GEN'L AGGREGATE LIMIT APPLIES PER: POLICY [X] PRO-JECT [X] LOC OTHER:	Y	Y	CPA9025871	1/1/2026	1/1/2027	EACH OCCURRENCE DAMAGE TO RENTED PREMISES (Ea occurrence) MED EXP (Any one person) PERSONAL & ADV INJURY GENERAL AGGREGATE PRODUCTS - COMP/OP AGG $	$ 1,000,000 $ 100,000 $ 5,000 $ 1,000,000 $ 2,000,000 $ 2,000,000 $
B	AUTOMOBILE LIABILITY X ANY AUTO OWNED AUTOS ONLY / SCHEDULED AUTOS X HIRED AUTOS ONLY / X NON-OWNED AUTOS ONLY	Y	Y	1000112051	1/1/2026	1/1/2027	COMBINED SINGLE LIMIT (Ea accident) BODILY INJURY (Per person) BODILY INJURY (Per accident) PROPERTY DAMAGE (Per accident) $	$ 1,000,000 $ $ $ $
A	X UMBRELLA LIAB X OCCUR EXCESS LIAB CLAIMS-MADE DED X RETENTION $ 0	Y	Y	CWA9025871	1/1/2026	1/1/2027	EACH OCCURRENCE AGGREGATE $	$ 6,000,000 $ 6,000,000 $
A	WORKERS COMPENSATION AND EMPLOYERS' LIABILITY ANYPROPRIETOR/PARTNER/EXECUTIVE OFFICER/MEMBER EXCLUDED? Y/N [N] (Mandatory in NH) If yes, describe under DESCRIPTION OF OPERATIONS below	N/A	Y	1000013406	1/1/2026	1/1/2027	X PER STATUTE / OTH-ER E.L. EACH ACCIDENT E.L. DISEASE - EA EMPLOYEE E.L. DISEASE - POLICY LIMIT	 $ 1,000,000 $ 1,000,000 $ 1,000,000
A A A	Leased/Rented Equipment Installation Floater Stored Materials			CPA9025871 CPA9025871 CPA9025871	1/1/2026 1/1/2026 1/1/2026	1/1/2027 1/1/2027 1/1/2027	Limit Limit Limit	$50,000 $600,000 $600,000

DESCRIPTION OF OPERATIONS / LOCATIONS / VEHICLES (ACORD 101, Additional Remarks Schedule, may be attached if more space is required)

First Supplemental Name applies to All Policies Midwest Storage Solutions, Inc. and Moduflex LLC.
City of Lincoln, Lancaster County, Lincoln-Lancaster County Public Building Commission &/or West Haymarket Joint Public Agency and their elected and appointed officials, officers, employees, agents, contractors and consultants are additional insured on a primary & non-contributory basis including completed operations on the general liability and additional insured on the auto liability with respect towork performed by the named insured per written contract. Waivers of subrogation in favor of the additional insureds apply to the general liability, auto liability and workers compensation with respect to work performed by the named insured per written contract.

CERTIFICATE HOLDER

West Haymarket Joint Public Agency (PBA)
555 S. 10th Street
Lincoln NE 68508

CANCELLATION

SHOULD ANY OF THE ABOVE DESCRIBED POLICIES BE CANCELLED BEFORE THE EXPIRATION DATE THEREOF, NOTICE WILL BE DELIVERED IN ACCORDANCE WITH THE POLICY PROVISIONS.

AUTHORIZED REPRESENTATIVE

© 1988-2015 ACORD CORPORATION. All rights reserved.

The ACORD name and logo are registered marks of ACORD

THIS ENDORSEMENT CHANGES THE POLICY. PLEASE READ IT CAREFULLY.

ADDITIONAL INSURED - OWNERS, LESSEES OR CONTRACTORS - COMPLETED OPERATIONS - AUTOMATIC STATUS WHEN REQUIRED IN WRITTEN CONSTRUCTION CONTRACT OR AGREEMENT

This endorsement modifies insurance provided under the following:

COMMERCIAL GENERAL LIABILITY COVERAGE PART

A. **SECTION II - WHO IS AN INSURED** is amended to include as an insured any person or organization whom you are required under a written contract or agreement to provide insurance such as is afforded under this policy, but only with respect to liability for "bodily injury" or "property damage" caused, in whole or in part, by "your work" performed at the site or location designated in the written contract or agreement.

However:

1. The insurance afforded to such additional insured only applies to the extent permitted by law; and
2. The insurance afforded to such additional insured will not be broader than:
   a. The coverage you have agreed to provide in the written contract or agreement; or
   b. The coverage provided by this endorsement.

B. With respect to the insurance afforded to these additional insureds, the following additional exclusions apply:

1. This does not apply to "bodily injury" or "property damage" occurring prior to the date the written contract or agreement was executed and in effect.
2. "Bodily injury" or "property damage" arising out of an architect's, engineer's, or surveyor's rendering of or failure to render any professional services for you, for such person or organization, or for others, including:
   a. The preparing, approving, or failure to prepare or approve, maps, shop drawings, opinions, reports, surveys, field orders, change orders, designs, drawings or specifications; and
   b. Supervisory, inspection, or engineering services.

   This exclusion applies even if the claims against any insured allege negligence or other wrongdoing in the supervision, hiring, employment, training or monitoring of others by that insured, if the "occurrence" which caused the "bodily injury" or "property damage" involved the rendering of or the failure to render any professional services.
3. Any "bodily injury" or "property damage" for which valid and collectible insurance is available under an Owners and Contractors Protective Liability policy that you have purchased.

C. With respect to the Insurance provided by this endorsement, the following is added to **SECTION III - LIMITS OF INSURANCE**:

8. The most we will pay under the insurance provided by this endorsement is:
   a. The applicable limit of insurance to which you have agreed in the written contract or agreement to provide; or
   b. The applicable Limit of Insurance shown in the Declarations,

   whichever is less.

D. With respect to the Insurance provided by this endorsement, Paragraph **4. Other Insurance** as found under **SECTION IV - COMMERCIAL GENERAL LIABILITY CONDITIONS** is replaced by the following:

4. Other Insurance

This insurance is excess over any other valid and collectible insurance, whether primary, excess, contingent or on any other basis, unless you have agreed in a written contract or agreement for this insurance to apply either on a:

(1) Primary and non-contributory; or

(2) Contributory basis.

When this insurance is excess, we will have no duty under Coverage **A** to defend the insured against any "suit" if any other insurer has a duty to defend the insured against that "suit". If no other insurer defends, we will undertake to do so, but we will be entitled to the insured's rights against all those other insurers.

 Includes copyrighted material of Insurance Services Office, Inc., with its permission.

When this insurance is excess over other insurance, we will pay only our share of the amount of the loss, if any, that exceeds the sum of:

(1) The total amount that all such other insurance would pay for the loss in the absence of this insurance; and

(2) The total of all deductible and self-insured amounts under all that other insurance.

We will share the remaining loss, if any, with any other insurance that is not described in this Excess Insurance provision and was not bought specifically to apply in excess of the Limits of Insurance shown in the Declarations of this Coverage Part.

Includes copyrighted material of Insurance Services Office, Inc., with its permission.

COMMERCIAL GENERAL LIABILITY
CGD 20 33 05 15

THIS ENDORSEMENT CHANGES THE POLICY. PLEASE READ IT CAREFULLY.

ADDITIONAL INSURED - OWNERS, LESSEES OR CONTRACTORS - AUTOMATIC STATUS WHEN REQUIRED IN CONSTRUCTION AGREEMENT

This endorsement modifies insurance provided under the following:

COMMERCIAL GENERAL LIABILITY COVERAGE PART

A. **SECTION II - WHO IS AN INSURED** is amended to include as an insured any person or organization whom you are required under a written contract or agreement to provide insurance such as is afforded under this policy, but only with respect to liability for "bodily injury" or "property damage" caused, in whole or in part, by:

1. Your acts or omissions; or
2. The acts or omissions of those acting on your behalf;

in the performance of your ongoing operations at the site or location designated in the written contract or agreement.

However,

1. The insurance afforded to such additional insured only applies to the extent permitted by law; and
2. The insurance afforded to such additional insured will not be broader than:
   a. The coverage you have agreed to provide in the written contract or agreement; or
   b. The coverage provided by this endorsement.

B. With respect to the insurance afforded to these additional insureds, the following additional exclusions apply:

1. This does not apply to "Bodily injury" or "property damage" occurring:
   a. Prior to the date the written contract or agreement was executed and in effect;
   b. After all work on the project (other than service, maintenance or repairs) to be performed at the site or location of the covered operations has been completed; or
   c. After that portion of "your work" out of which the injury or damage arises has been put to its intended use by any person or organization other than another contractor or subcontractor engaged in performing operations for a principal as a part of the same project.
2. "Property damage" to:
   a. Property owned, occupied or used by;
   b. Property rented to, in the care, custody, or control of, or over which physical control is being exercised for any purpose by; or
   c. "Your work" for,

   such person or organization.
3. "Bodily injury" or "property damage" arising out of an architect's, engineer's, or surveyor's rendering of or failure to render any professional services for you, for such person or organization, or for others, including:
   a. The preparing, approving, or failure to prepare or approve, maps, shop drawings, opinions, reports, surveys, field orders, change orders, designs, drawings or specifications; and
   b. Supervisory, inspection, or engineering services.

   This exclusion applies even if the claims against any insured allege negligence or other wrongdoing in the supervision, hiring, employment, training or monitoring of others by that insured, if the "occurrence" which caused the "bodily injury" or "property damage" involved the rendering of or the failure to render any professional services.
4. Any "bodily injury" or "property damage" for which valid and collectible insurance is available under an Owners and Contractors Protective Liability policy that you have purchased.

C. With respect to the Insurance provided by this endorsement, the following is added to **SECTION III - LIMITS OF INSURANCE**:

8. The most we will pay under the insurance provided by this endorsement is:
   a. The applicable limit of insurance to which you have agreed in the written contract or agreement to provide; or
   b. The applicable Limit of Insurance shown in the Declarations,

   whichever is less.

Includes copyrighted material of Insurance Services Office, Inc., with its permission.

D. With respect to the Insurance provided by this endorsement, Paragraph **4. Other Insurance** as found under **SECTION IV - COMMERCIAL GENERAL LIABILITY CONDITIONS** is replaced by the following:

4. Other Insurance

This insurance is excess over any other valid and collectible insurance, whether primary, excess, contingent or on any other basis, unless you have agreed in a written contract or agreement for this insurance to apply on either a:

(1) Primary and non-contributory basis; or

(2) Contributory basis.

When this insurance is excess, we will have no duty under Coverage **A** to defend the insured against any "suit" if any other insurer has a duty to defend the insured against that "suit". If no other insurer defends, we will undertake to do so, but we will be entitled to the insured's rights against all those other insurers.

When this insurance is excess over other insurance, we will pay only our share of the amount of the loss, if any, that exceeds the sum of:

(1) The total amount that all such other insurance would pay for the loss in the absence of this insurance; and

(2) The total of all deductible and self-insured amounts under all that other insurance.

We will share the remaining loss, if any, with any other insurance that is not described in this Excess Insurance provision and was not bought specifically to apply in excess of the Limits of Insurance shown in the Declarations of this Coverage Part.

Includes copyrighted material of Insurance Services Office, Inc., with its permission.

COMMERCIAL GENERAL LIABILITY
CGD 09 06 07 16

THIS ENDORSEMENT CHANGES THE POLICY. PLEASE READ IT CAREFULLY.

SILVER SERIES PLUS PREFERRED GENERAL LIABILITY COVERAGE ENHANCEMENT ENDORSEMENT

This endorsement modifies insurance provided under the following:

COMMERCIAL GENERAL LIABILITY COVERAGE FORM

SCHEDULE*

Coverage	Limit(s) of Insurance	Page

* Information required to complete this Schedule, if not shown on this endorsement, will be shown in the Declarations.

Includes copyrighted material of Insurance Services Office, Inc., with its permission.
Donegal Insurance Group

The following Coverages apply only if they are shown in the Schedule above. Each of the Coverages is subject to the limit of insurance associated with such Coverage in the Schedule.

I. NON-OWNED WATERCRAFT COVERAGE

A. Subparagraph **g.(2)** under paragraph **2. Exclusions** as found in **COVERAGE A. BODILY INJURY AND PROPERTY DAMAGE LIABILITY (SECTION I - COVERAGES)** is deleted and replaced by the following:

(2) A watercraft you do not own that is:

(a) Less than 51 feet long; and

(b) Not being used to carry persons or property for a charge;

B. With respect to **COVERAGE A. BODILY INJURY AND PROPERTY DAMAGE LIABILITY** only, the following provision is added to **SECTION II - WHO IS AN INSURED**:

4. Any person is an insured with respect to a watercraft you do not own that is less than 51 feet long and is not being used to carry persons or property for a charge, while using such watercraft with your permission. Any other person or organization responsible for the conduct of such person is also an insured, but only with respect to liability arising out of the operation of the watercraft.

However, no person or organization is an insured:

a. With respect to "bodily injury" to a co-"employee" of the person operating the watercraft;

b. With respect to "property damage" to property owned by, rented to, loaned to, occupied by, or otherwise in the care, custody or control of, you or the employer of any person who is insured under this provision; or

c. If other insurance of any kind is available to that person or organization for this liability, unless such insurance was written to apply specifically in excess of this policy.

II. BROADENED DAMAGE TO PREMISES RENTED TO YOU COVERAGE

The following provisions apply only if a Limit of Insurance is shown in the Declarations for Damage To Premises Rented To You. If no Limit of Insurance is shown in the Declarations for Damage To Premises Rented To You, or if Damage To Premises Rented To You is shown as excluded, the following provisions do not apply.

A. Subparagraph **j. Damage To Property** under paragraph **2.** Exclusions as found in **COVERAGE A. BODILY INJURY AND PROPERTY DAMAGE LIABILITY (SECTION I - COVERAGES)** is deleted and replaced by the following:

j. Damage To Property

"Property damage" to:

(1) Property you own, rent, or occupy, including any costs or expenses incurred by you, or any other person, organization or entity, for repair, replacement, enhancement, restoration or maintenance of such property for any reason, including prevention of injury to a person or damage to another's property;

(2) Premises you sell, give away or abandon, if the "property damage" arises out of any part of those premises;

(3) Property loaned to you;

(4) Personal property in the care, custody or control of the insured;

(5) That particular part of real property on which you or any contractors or subcontractors working directly or indirectly on your behalf are performing operations, if the "property damage" arises out of those operations; or

(6) That particular part of any property that must be restored, repaired or replaced because "your work" was incorrectly performed on it.

Paragraph **(2)** of this exclusion does not apply if the premises are "your work" and were never occupied, rented or held for rental by you.

Paragraphs **(3), (4), (5)** and **(6)** of this exclusion do not apply to liability assumed under a sidetrack agreement.

Paragraph **(6)** of this exclusion does not apply to "property damage" included in the "products-completed operations hazard".

Includes copyrighted material of Insurance Services Office, Inc., with its permission.

B. The last subparagraph under paragraph **2. Exclusions** as found in **COVERAGE A. BODILY INJURY AND PROPERTY DAMAGE LIABILITY (SECTION I - COVERAGES)** is deleted and replaced by the following:

Exclusions **c.** through **e.** and **g.** through **n.** do not apply to "property damage" to premises while rented to you or temporarily occupied by you with permission of the owner. Exclusion **f.** does not apply to damage by fire to premises while rented to you or temporarily occupied by you with permission of the owner. A separate limit of insurance applies to this coverage as described in Section **III** - Limits Of Insurance and as provided under the Broadened Damage To Premises Rented To You Coverage.

C. Subject to the Each Occurrence Limit Shown in the Declarations, the Limit of Insurance shown in the Schedule above for Broadened Damage To Premises Rented To You Coverage is the most we will pay under Coverage **A** for damages because of "property damage" to any one premises, while rented to you or temporarily occupied by you with permission of the owner. The Limit of Insurance for Broadened Damage To Premises Rented To You Coverage shown in the Schedule above is in addition to any Limit of Insurance shown in the Declarations for Damage To Premises Rented To You.

III. ELECTRONIC DATA LIABILITY

A. Subparagraph **p. Electronic Data** under paragraph **2.** Exclusions as found in **COVERAGE A. BODILY INJURY AND PROPERTY DAMAGE LIABILITY (SECTION I - COVERAGES)** is deleted and replaced by the following:

p. Access Or Disclosure Of Confidential Or Personal Information And Data-related Liability

Damages arising out of:

(1) Any access to, or disclosure or theft of, any person's or organization's confidential or personal information, including patents, trade secrets, processing methods, customer lists, financial information, an individual's name, social security number, driver's license number, state identification number, credit card information, debit card information, account number, account histories, passwords, health information, medical information, or any other type of nonpublic information; or

(2) The loss of, loss of use of, damage to, corruption of, inability to access, inability to transmit or receive, or inability to manipulate "electronic data" that does not result from physical injury to tangible property.

This exclusion applies even if damages are claimed for notification costs, monitoring expenses, forensic or investigation expenses, public relations expenses or any other loss, cost or expense incurred by you or others arising out of that which is described in Paragraph **(1)** or **(2)** above.

B. The following paragraph is added to **SECTION III - LIMITS OF INSURANCE**:

Subject to **5.** above, the Electronic Data Liability Limit shown in the Schedule above is the most we will pay under **COVERAGE A** for "property damage" because of all loss of "electronic data" arising out of any one "occurrence".

C. With respect to the insurance provided by this endorsement, the definition of "Property Damage" in the Definitions Section is replaced by the following:

17. "Property damage" means:

a. Physical injury to tangible property, including all resulting loss of use of that property. All such loss of use shall be deemed to occur at the time of the physical injury that caused it;

b. Loss of use of tangible property that is not physically injured. All such loss of use shall be deemed to occur at the time of the "occurrence" that caused it; or

c. Loss of, loss of use of, damage to, corruption of, inability to access, or inability to properly manipulate "electronic data", resulting from physical injury to tangible property. All such loss of "electronic data" shall be deemed to occur at the time of the "occurrence" that caused it.

"Property damage" does not include any loss, cost or expense to correct any defective, faulty or incorrect work performed by you or by any contractors or subcontractors working directly or indirectly on your behalf.

For the purposes of this insurance, "electronic data" is not tangible property.

Includes copyrighted material of Insurance Services Office, Inc., with its permission.

D. With respect to the insurance provided by this endorsement, the following Definition is added to **SECTION V - DEFINITIONS**:

"Electronic data" means information, facts or programs stored as or on, created or used on, or transmitted to or from computer software (including systems and applications software), hard or floppy disks, CD-ROMS, tapes, drives, cells, data processing devices or any other media which are used with electronically controlled equipment.

IV. SUPPLEMENTARY PAYMENTS - COVERAGES A AND B INCREASED LIMITS

A. Subparagraph **b.** under paragraph **1.** as found in **SUPPLEMENTARY PAYMENTS - COVERAGES A AND B (SECTION I - COVERAGES)** is deleted and replaced by the following:

b. Up to the Limit of Insurance shown in the Schedule above for Supplementary Payments - Coverages A and B - Bail Bonds Increased Limit for cost of bail bonds required because of accidents or traffic law violations arising out of the use of any vehicle to which the Bodily Injury Liability Coverage applies. We do not have to furnish these bonds.

B. Subparagraph **d.** under paragraph **1.** as found in **SUPPLEMENTARY PAYMENTS - COVERAGES A AND B (SECTION I - COVERAGES)** is deleted and replaced by the following:

d. All reasonable expenses incurred by the insured at our request to assist us in the investigation or defense of the claim or "suit". Expenses paid under this provision includes actual loss of earnings, up to the Limit of Insurance shown in the Schedule above for Supplementary Payments - Coverages A and B - Loss of Earnings Increased Limit, because of time off from work.

V. BROAD FORM NAMED INSURED COVERAGE

With respect to **COVERAGE A. BODILY INJURY AND PROPERTY DAMAGE LIABILITY** and **COVERAGE B. PERSONAL AND ADVERTISING INJURY LIABILITY**, the following provision is added to paragraph **1.** as found in **SECTION II - WHO IS AN INSURED**:

f. An organization other than a partnership, joint venture or limited liability company, your legally incorporated subsidiaries are insureds if you own a financial interest of more than 50 percent of the voting stock on the effective date of this endorsement.

However, coverage under this provision does not apply to "bodily injury", "property damage", or "personal and advertising injury" with respect to which an insured under this policy, including any endorsement attached to and made a part of this policy, is also an insured under another policy, or would be an insured under such policy but for its termination or the exhaustion of the applicable limits of insurance, unless such policy was written to apply specifically in excess of this policy.

VI. INCIDENTAL MALPRACTICE LIABILITY - NURSE, EMT OR PARAMEDIC COVERAGE

Paragraph **2.a.(1)(d)** as found in **SECTION II - WHO IS AN INSURED** is deleted and replaced by the following:

(d) Arising out of his or her providing or failing to provide professional health care services. This paragraph **2.a.(1)(d)** does not apply to a nurse, emergency medical technician (EMT) or paramedic employed by you.

VII. BROADENED NEWLY FORMED OR ACQUIRED ORGANIZATIONS COVERAGE

Paragraph **3.a.** as found in **SECTION II - WHO IS AN INSURED** is deleted and replaced by the following:

a. Coverage under this provision is afforded only until the 180th day after you acquire or form the organization or the end of the policy period, whichever is earlier;

VIII. BROADENED WHO IS AN INSURED

The following is added to **SECTION II - WHO IS AN INSURED**:

The following is an additional insured:

A. 1. Any person or organization from whom you lease equipment when you and such person or organization have agreed in writing in a contract or agreement that such person or organization be added as an additional insured on your policy. Such person or organization is an insured only with respect to liability for "bodily injury" or "property damage" caused, in whole or in part, by your maintenance, operation or use of equipment leased to you by such person or organization. A person's or organization's status as an insured under this endorsement ends when their contract or agreement with you for such leased equipment ends.

Includes copyrighted material of Insurance Services Office, Inc., with its permission.

However, such person or organization is not an insured with respect to any "occurrence" which takes place after the equipment lease expires.

2. Any person or organization (referred to below as vendor) with whom you agree in a written contract or agreement to provide insurance such as is afforded under this policy, but only with respect to "bodily injury" or "property damage" caused, in whole or in part, by "your products" which are distributed or sold in the regular course of the vendor's business, subject to the following additional exclusions:

   (a) The insurance afforded the vendor does not apply to:

   (1) "Bodily injury" or "property damage" for which the vendor is obligated to pay damages by reason of the assumption of liability in a contract or agreement. This exclusion does not apply to liability for damages that the vendor would have in the absence of the contract or agreement;

   (2) Any express warranty unauthorized by you;

   (3) Any physical or chemical change in the product made intentionally by the vendor;

   (4) Repackaging, unless unpacked solely for the purpose of inspection, demonstration, testing, or the substitution of parts under instructions from the manufacturer, and then repackaged in the original container;

   (5) Any failure to make such inspections, adjustments, tests or servicing as the vendor has agreed to make or normally undertakes to make in the usual course of business, in connection with the distribution or sale of the products;

   (6) Demonstration, installation, servicing or repair operations, except such operations performed at the vendor's premises in connection with the sale of the product;

   (7) Products which, after distribution or sale by you, have been labeled or relabeled or used as a container, part or ingredient of any other thing or substance by or for the vendor.

   (8) "Bodily injury" or "property damage" arising out of the sole negligence of the vendor for its own acts or omissions or those of its employees or anyone else acting on its behalf. However, this exclusion does not apply to:

   (i) The exceptions contained in Subparagraphs **(4)** or **(6)** above; or

   (ii) Such inspections, adjustments, tests or servicing as the vendor has agreed to make or normally undertakes to make in the usual course of business, in connection with the distribution or sale of the products.

   (b) This insurance does not apply to any insured person or organization, from whom you have acquired such products, or any ingredient, part or container, entering into, accompanying or containing such products.

B. The insurance afforded to such person or organization described in paragraph **A.** above only applies to the extent permitted by law.

C. The insurance afforded to such person or organization described in paragraph **A.** above will not be broader than:

1. The coverage you have agreed to provide in the written contract or agreement; or
2. The coverage provided by this endorsement.

D. A person's or organization's status as an additional insured under this endorsement ends when their contract or agreement with you ends.

E. The insurance provided to such person or organization described in paragraph **A.** above does not apply to "bodily injury" or "property damage" occurring:

1. Prior to the date the written contract or agreement was executed and in effect;
2. After your contract or agreement with such additional insured ends; or
3. After the requirement in the written contract or agreement to add such person or organization as an additional insured on your policy ends.

Includes copyrighted material of Insurance Services Office, Inc., with its permission.

F. The insurance afforded to any additional insured is excess over any other valid and collectible insurance, whether primary, excess, contingent or on any other basis, unless you have agreed in a written contract or agreement for this insurance to apply on either a:

1. Primary and non-contributory basis; or
2. Contributory basis.

IX. MEDICAL EXPENSE INCREASED LIMIT

The following provision applies only if a Limit of Insurance is shown in the Declarations for Medical Expense. If no Limit of Insurance is shown in the Declarations for Medical Expense, or if Medical Expense is shown as excluded, the following provision does not apply.

Subject to the Each Occurrence Limit Shown in the Declarations, the Limit of Insurance shown in the Schedule above for Medical Expense Increased Limit is the most we will pay under Coverage **C** for all medical expenses because of "bodily injury" sustained by any one person. The Limit of Insurance for Medical Expense Increased Limit shown in the Schedule above is in addition to any Limit of Insurance shown in the Declarations for Medical Expense.

X. AMENDMENT OF GENERAL AGGREGATE LIMIT OF INSURANCE - PER PROJECT AND PER LOCATION

A. With respect to **COVERAGE A. BODILY INJURY AND PROPERTY DAMAGE LIABILITY** and **COVERAGE C. MEDICAL PAYMENTS** only, the following provision is added to **SECTION III - LIMITS OF INSURANCE**:

The General Aggregate as described in paragraph **2.** under **SECTION III - LIMITS OF INSURANCE** applies separately to each of your projects away from premises owned by or rented to you and separately to each of your "locations" owned by or rented to you. However:

1. This Amendment of General Aggregate Limit of Insurance - Per Project and Per Location provision does not apply if a single "occurrence" under Coverage **A**, or a single accident under Coverage **C**, can be attributed to multiple projects or "locations". The General Aggregate Limit of Insurance shown in the Declarations will apply to the sum of all damages under Coverage **A** arising out of such "occurrence" and all medical expenses under Coverage **C** arising out of such accident;
2. This Amendment of General Aggregate Limit of Insurance - Per Project and Per Location does not apply to damages under Coverage **B**. The General Aggregate Limit of Insurance shown in the Declarations continues to apply to the sum of all damages under Coverage **B**, regardless of the number of projects or "locations";
3. If Included with a Stop Loss Limitation is indicated in the Schedule above under Limit(s) of Insurance, the most we will pay under this Amendment of General Aggregate Limit of Insurance - Per Project and Per Location for the sum of all damages under Coverage **A** (except for damages because of "bodily injury" or "property damage" included in the "products-completed operations hazard") and for all medical expenses under Coverage **C**, occurring during any one period of twelve (12) consecutive months (or portion thereof) beginning with the effective date of the policy to which this endorsement is attached, is three (3) times the General Aggregate Limit of Insurance shown in the Declarations. This applies regardless of the number of:
   - **a.** Projects away from premises owned by or rented to you;
   - **b.** "Locations" owned by or rented to you;
   - **c.** Insureds;
   - **d.** Claims made or "suits" brought; or
   - **e.** Persons or organizations making claims or bringing "suits".

B. With respect to the insurance provided by this endorsement, the following Definition is added to **SECTION V - DEFINITIONS**:

"Locations" means premises involving the same or connecting lots, or premises whose connection is interrupted only by a street, roadway, waterway or right-of-way of a railroad.

XI. KNOWLEDGE OF AN OCCURRENCE, OFFENSE, CLAIM OR SUIT

Subparagraphs **a.** and **b.** under paragraph **2. Duties In The Event Of Occurrence, Offense, Claim Or Suit** as found in **SECTION IV - COMMERCIAL GENERAL LIABILITY CONDITIONS** are deleted and replaced by the following:

Includes copyrighted material of Insurance Services Office, Inc., with its permission.

a. You must see to it that we are notified as soon as practicable of an "occurrence" or an offense which may result in a claim. To the extent possible, notice should include:

(1) How, when and where the "occurrence" or offense took place;

(2) The names and addresses of any injured persons and witnesses; and

(3) The nature and location of any injury or damage arising out of the "occurrence" or offense.

This Condition only applies when the "occurrence", offense, claim or "suit" is known to you (if you are an individual), to a partner (if you are a partnership), a manager (if you are a limited liability company), or an officer or insurance manager of a corporation (if you are a corporation). Knowledge of an "occurrence", offense, claim or "suit" by an agent, servant or "employee" of an insured (other than a partner, manager, officer, or insurance manager) does not imply knowledge by the insured unless the insured has received notice from the agent, servant or "employee".

b. If a claim is made or "suit" is brought against any insured, you must:

(1) Immediately record the specifics of the claim or "suit" and the date received; and

(2) Notify us as soon as practicable.

You must see to it that we receive written notice of the claim or "suit" as soon as practicable. Failure by an agent, servant or "employee" of an insured (other than a partner, manager, officer, or insurance manager) to notify us of an "occurrence", offense, claim or "suit" will not jeopardize your coverage.

XII. WAIVER OF TRANSFER OF RIGHTS OF RECOVERY

The following is added to the paragraph **8. Transfer Of Rights Of Recovery Against Others To Us** as found in **SECTION IV - COMMERCIAL LIABILITY CONDITIONS**:

We waive any right of recovery we may have against any person or organization because of payments we make for injury or damage arising out of "your work" included in the "products-completed operations hazard" or your ongoing operations, subject to the following:

a. You are required under a written contract to waive your rights to recover from that person or organization; and

b. The written contract was executed and in effect before any injury or damage that would give rise to a claim under this Commercial General Liability Coverage Part.

This waiver does not apply to any person who is an engineer or architect, or to any organization with respect to an engineer or architect employed by such organization, unless agreed to in writing by us.

XIII. UNINTENTIONAL FAILURE TO DISCLOSE HAZARDS

The following Condition is added to **SECTION IV - COMMERCIAL GENERAL LIABILITY CONDITIONS**:

10. Unintentional Failure To Disclose Hazards

Any unintentional error or omission in the description of, or failure to completely describe, any premises or operations intended to be covered by this Coverage Part will not invalidate or affect coverage for those premises or operations. Such unintentional error or omission must be reported to us as soon as practicable after its discovery.

This Condition does not affect our right to collect any additional premium associated with such unintentional error or omission or our right to cancel or non-renew this policy.

XIV. MOBILE EQUIPMENT REDEFINED

Subparagraph **f.(1)** under the definition of "mobile equipment" as found in **SECTION V - DEFINITIONS** is deleted and replaced by the following:

(1) Equipment with a gross vehicle weight of 1000 pounds or more and designed primarily for:

(a) Snow removal;

(b) Road maintenance, but not construction or resurfacing; or

(c) Street cleaning.

Includes copyrighted material of Insurance Services Office, Inc., with its permission.

COMMERCIAL AUTO
CAD 09 31 01 22

THIS ENDORSEMENT CHANGES THE POLICY. PLEASE READ IT CAREFULLY.

ADDITIONAL INSURED BY CONTRACT - LIABILITY COVERAGE

This endorsement modifies insurance provided under the following:

BUSINESS AUTO COVERAGE FORM

With respect to coverage provided by this endorsement, the provisions of the Coverage Form apply unless modified by the endorsement.

The following provisions are added to subparagraph **1. Who Is An Insured** under paragraph **A. Coverage** as found in **SECTION II – COVERED AUTOS LIABILITY COVERAGE**:

d. **(1)** Any person or organization with whom you are required under a written contract, agreement, or permit to provide insurance such as is afforded under this policy, is an "insured" for Liability Coverage, but only to the extent that person or organization qualifies as an "insured" under the Who Is An Insured Provision contained in Section II of the Coverage Form.

(2) With respect to the insurance afforded to these additional insureds, the following additional exclusions apply:

This does not apply to "bodily injury" or "property damage" occurring:

(i) Prior to the date the written contract or agreement was executed and in effect;

(ii) After your contract or agreement with such additional insured ends; or

(iii) After the requirement in the written contract or agreement to add such person or organization as an additional insured on your policy ends.

Includes copyrighted material of Insurance Services Office, Inc., with its permission

COMMERCIAL AUTO
CAD 09 04 01 22

THIS ENDORSEMENT CHANGES THE POLICY. PLEASE READ IT CAREFULLY.

SILVER SERIES PLUS
BUSINESS AUTO COVERAGE ENHANCEMENT ENDORSEMENT

This endorsement modifies insurance provided under the following:

BUSINESS AUTO COVERAGE FORM

SCHEDULE*

Coverage	Limits of Insurance

* Information required to complete this Schedule, if not shown on this endorsement, will be shown in the Declarations.

The following Coverages apply only if they are shown in the Schedule above. Each of the Coverages is subject to the limit of insurance associated with such Coverage in the Schedule.

The following provisions apply only with respect to the insurance provided by the Business Auto Coverage Form.

I. BROAD FORM NAMED INSURED AND NEWLY ACQUIRED OR FORMED ORGANIZATIONS COVERAGE

The following provisions are added to subparagraph **1. Who Is An Insured** under paragraph **A. Coverage** as found in **SECTION II – COVERED AUTOS LIABILITY COVERAGE**:

d. Any organization, or any subsidiary of such organization, which is a legally incorporated entity of which you own a financial interest of more than 50 percent of the voting stock on the effective date of this endorsement with respect to any covered "auto". However, this paragraph **A.1.d.** does not apply to "accident" or "loss" with respect to which an "insured" under this policy is also an "insured" under another policy, or would be an "insured" under such other policy but for its termination or upon the exhaustion of its limits of insurance, unless such other policy was written to apply specifically in excess of this policy.

Includes copyrighted material of Insurance Services Office, Inc., with its permission

e. Any organization you newly acquire or form, other than a partnership, joint venture or limited liability company, and over which you maintain ownership or majority interest, will qualify as an insured if there is no other similar insurance available to that organization. However:

(1) Coverage under this provision is afforded only until the 180th day after you acquire or form the organization or the end of the policy period, whichever is earlier;

(2) Coverage under this provision does not apply to "bodily injury" or "property damage" that results from an "accident" that occurred before you acquired or formed the organization.

All provisions, exclusions and conditions applicable to you, except those pertaining to notice of cancellation or refusal to renew, as provided in this policy, including any endorsement attached to and made a part of this policy, apply with respect to the insurance provided to such newly acquired or formed organizations.

II. SUPPLEMENTARY PAYMENTS INCREASED LIMITS

A. Subparagraph **a.(2)** under paragraph **2. Coverage Extensions** as found in paragraph **A. Coverage (SECTION II – COVERED AUTOS LIABILITY COVERAGE)** is deleted and replaced by the following:

(2) Up to the limit of insurance shown in the Schedule above for Supplementary Payments - Bail Bonds Increased Limit for the cost of bail bonds (including bonds for related traffic law violations) required because of an "accident" we cover. We do not have to furnish these bonds.

B. Subparagraph **a.(4)** under paragraph **2. Coverage Extensions** as found in paragraph **A. Coverage (SECTION II – COVERED AUTOS LIABILITY COVERAGE)** is deleted and replaced by the following:

(4) All reasonable expenses incurred by the "insured" at our request, including actual loss of earnings up to the limit of insurance shown in the Schedule above for Supplementary Payments - Loss of Earnings Increased Limit, because of time off from work.

III. BROADENED TOWING AND LABOR COSTS COVERAGE - ALL VEHICLE TYPES

Subparagraph **2. Towing** under paragraph **A. Coverage** as found in **SECTION III - PHYSICAL DAMAGE COVERAGE** is deleted and replaced by the following:

2. Towing And Labor Costs

We will pay up to the limit of insurance shown in the Schedule above for Broadened Towing And Labor Costs Each Disablement for towing and labor costs incurred each time a covered "auto" is disabled. However, the labor must be performed at the place of disablement.

With respect to disablement of covered "autos" other than of the private passenger type, the most we will pay for the total of all towing and labor costs during the policy period shown in the Declarations is the limit of insurance shown in the Schedule above for Broadened Towing And Labor Costs Aggregate Limit.

IV. BROADENED TRANSPORTATION EXPENSES COVERAGE EXTENSION - ALL VEHICLE TYPES

Subparagraph **a. Transportation Expenses** under paragraph **4. Coverage Extensions** as found in paragraph **A. Coverage (SECTION III - PHYSICAL DAMAGE COVERAGE)** is deleted and replaced by the following:

a. Transportation Expenses

We will pay per day up to the limit of insurance shown in the Schedule above for Broadened Transportation Expenses Increased Limits Per Day, subject to the maximum limit of insurance shown in the Schedule above for Broadened Transportation Expenses Maximum Limit, for temporary transportation expense incurred by you because of the total theft of a covered "auto". We will pay only for those covered "autos" for which you carry either Comprehensive or Specified Causes of Loss Coverage. We will pay for temporary transportation expenses incurred during the period beginning 48 hours after the theft and ending, regardless of the policy's expiration, when the covered "auto" is returned to use or we pay for its "loss".

Includes copyrighted material of Insurance Services Office, Inc., with its permission

V. BROADENED LOSS OF USE EXPENSES COVERAGE EXTENSION

Subparagraph **b. Loss Of Use Expenses** under paragraph **4. Coverage Extensions** as found in paragraph **A. Coverage** (**SECTION III - PHYSICAL DAMAGE COVERAGE**) is deleted and replaced by the following:

b. Loss Of Use Expenses

For Hired Auto Physical Damage, we will pay expenses for which an "insured" becomes legally responsible to pay for loss of use of a vehicle rented or hired without a driver, under a written rental contract or agreement. We will pay for loss of use expenses if caused by:

(1) Other than collision only if the Declarations indicate that Comprehensive Coverage is provided for any covered "auto";

(2) Specified Causes Of Loss only if the Declarations indicate that Specified Causes Of Loss Coverage is provided for any covered "auto"; or

(3) Collision only if the Declarations indicate that Collision Coverage is provided for any covered "auto".

However, the most we will pay for any expenses for loss of use is the limit of insurance shown in the Schedule above for Loss Of Use Expenses Per Day, subject to the maximum limit of insurance shown in the Schedule above for Loss Of Use Expenses Maximum Limit.

VI. The following is added to paragraph **A. COVERAGE** (**SECTION III - PHYSICAL DAMAGE COVERAGE**):

5. Hired Auto Physical Damage

If hired "autos" are covered "autos" for Liability Coverage under this policy and if Physical Damage Comprehensive Coverage, Physical Damage Specified Causes Of Loss Coverage, or Physical Damage Collision Coverage is provided under this policy for any "auto" you own, then such Physical Damage Coverages are extended to apply to "autos" you hire without a driver, subject to the following provisions:

a. The most we will pay for any "accident" or "loss" under this Hired Auto Physical Damage Coverage is the lesser of:

(1) The limit of insurance shown in the Schedule above for Hired Auto Physical Damage Coverage - Any One Accident Or Loss;

(2) The actual cash value, which includes an adjustment for depreciation and physical condition in the event of a total "loss"; or

(3) The cost of repairing or replacing the damaged or stolen hired "auto" with other property of like kind and quality,

minus a $500 deductible. No deductible applies to "loss" caused by fire or lightning.

b. Subject to the limit of insurance and deductible provisions provided in paragraph **5.a.** above, we will provide coverage equal to the broadest Physical Damage Coverage applicable to any covered "auto" shown in the Declarations.

c. This Hired Auto Physical Damage Coverage does not apply to any "auto" you lease, hire, rent or borrow from any of your "employees", partners (if you are a partnership), members (if you are a limited liability company), or members of their households.

d. This Hired Auto Physical Damage Coverage is excess over all other collectible insurance.

6. Rental Reimbursement Expenses

We will pay for rental reimbursement expenses incurred by you for the rental of an "auto" because of "loss", other than total theft, to a covered "auto". We will pay rental reimbursement expenses only for those covered "autos":

a. For which you carry either Comprehensive or Specified Causes of Loss Coverage if the "loss" arises from such coverage; or

b. For which you carry either Collision Coverage if the "loss" arises from such coverage.

We will pay only for those expenses incurred during the policy period beginning 24 hours after the "loss" and ending, regardless of the policy's expiration, when the covered "auto" is repaired or replaced or we pay for its "loss". This coverage does not apply while there are spare or reserve "autos" available to you for your operations. The most we will pay for rental reimbursement expenses under this Coverage Extension because of "loss" to a covered "auto" is the limit of insurance shown in the Schedule above for Rental Reimbursement Coverage. No deductibles apply to this coverage.

If the Rental Reimbursement Coverage endorsement is also attached to and made a part of this policy, then the coverage provided under this Rental Reimbursement Expenses Coverage Extension will be excess over the insurance provided by the Rental Reimbursement Coverage endorsement.

 Includes copyrighted material of Insurance Services Office, Inc., with its permission

7. Personal Effects Coverage

We will pay up to the limit of insurance shown in the Schedule above for Personal Effects Coverage for loss to wearing apparel and other personal effects which are:

a. Owned by an "insured"; and

b. In or on your covered "auto".

This coverage applies only in the event of a total theft of your covered "auto".

No deductibles apply to this coverage.

The insurance provided by this Personal Effects Coverage provision is excess over any other collectible insurance covering such property.

8. Auto Loan/Lease Gap Coverage

In the event of a total "loss" to a covered "auto" shown on the Declarations in the Schedule Of Covered Autos You Own, we will pay any unpaid amount due on the lease or loan for a covered "auto", less:

a. The amount paid under the Physical Damage Coverage Section of the policy; and

b. Any:

(1) Overdue lease/loan payments at the time of the "loss";

(2) Financial penalties imposed under a lease for excessive use, abnormal wear and tear or high mileage.

(3) Security deposits not returned by the lessor;

(4) Costs for extended warranties, Credit Life Insurance, Health, Accident or Disability Insurance purchased with the loan or lease; and

(5) Carry-over balances from previous loans or leases.

We will pay the unpaid amount due on the lease or loan only for those covered "autos":

a. For which you carry either Comprehensive or Specified Causes of Loss Coverage if the "loss" arises from such coverage; or

b. For which you carry either Collision Coverage if the "loss" arises from such coverage.

VII. AIRBAG ACCIDENTAL DISCHARGE COVERAGE

The following is added to subparagraph **3.** under paragraph **B. Exclusions** as found in **SECTION III - PHYSICAL DAMAGE COVERAGE**:

The exclusion for "loss" caused by or resulting from mechanical breakdown, as described in paragraph **B.3.a.** above, does not apply with respect to the accidental discharge of an airbag in a covered "auto" if the airbag is repaired or replaced in a manner acceptable to us. No deductible will apply to such "loss".

VIII. REPLACEMENT COST OF A PRIVATE PASSENGER VEHICLE

For a covered private passenger "auto" you own, paragraph **C. Limits Of Insurance** as found in **SECTION III - PHYSICAL DAMAGE COVERAGE** is replaced by the following:

If we deem a covered "auto" to be a total loss within 180 days of your purchase of the automobile new, and it has not been previously titled, at our option we may:

1. Replace the covered "auto" with a new auto of like make, model and year; or

2. Pay you an amount equal to the cost of the covered "auto" new, including taxes.

IX. GLASS REPAIR DEDUCTIBLE WAIVER

The following is added to paragraph **D. Deductible** as found in **SECTION III - PHYSICAL DAMAGE COVERAGE**:

However, no deductible applies to glass damage if the glass is repaired in a manner acceptable to us instead of replaced.

X. PARKED AUTO COLLISION DEDUCTIBLE

A. The following is added to paragraph **D. Deductible** as found in **SECTION III - PHYSICAL DAMAGE COVERAGE**:

However, in the event of "loss" caused by collision to a covered "auto" while such "auto" is in the care, custody or control of an "insured" and legally parked, the Collision Coverage deductible amount that will be applied to the "loss" will be $100, regardless of any deductible amount shown in the Declarations as applicable to such covered "auto".

Includes copyrighted material of Insurance Services Office, Inc., with its permission

This Parked Auto Collision Deductible provision does not apply to the "loss" if:

1. The covered "auto" is occupied at the time of the "loss"; or
2. The covered "auto" is in the care, custody or control of any person or organization engaged in the business of selling, servicing, repairing or parking "autos".

B. If the Exclusions section of any Uninsured Motorists Coverage endorsement or Underinsured Motorists endorsement attached to and made a part of this policy includes a provision excluding a stated dollar amount from the total amount of "property damage" as the result of any one "accident", such stated dollar amount is revised to be $100.

XI. MULTIPLE DEDUCTIBLE PROVISION

The following is added to paragraph **D. Deductible** as found in **SECTION III - PHYSICAL DAMAGE COVERAGE**:

If a "loss" covered under this Coverage Part also involves a "loss" to other property from the same "accident", which is covered under a Commercial Property or Inland Marine Coverage Part issued by us or any member company of ours for you, only the highest deductible applicable to those coverages will be applied to the "accident".

XII. KNOWLEDGE OF AN ACCIDENT, CLAIM, SUIT OR LOSS

The following provisions are added to subparagraph **2. Duties In The Event Of Accident, Claim, Suit Or Loss** under paragraph **A. Loss Conditions** as found in **SECTION IV - BUSINESS AUTO CONDITIONS**:

d. Knowledge of an "accident", claim, "suit" or "loss" by an agent, servant or "employee" of an "insured" (other than an officer or insurance manager if you are a corporation, a partner if you are a partnership, or a manager if you are a limited liability company) does not imply knowledge of the "insured" unless the "insured" has received notice from the agent, servant or "employee".

e. Failure by an agent, servant or "employee" of an "insured" (other than an officer or insurance manager if you are a corporation, a partner if you are a partnership, or a manager if you are a limited liability company) to notify us of an "accident", claim, "suit" or "loss" will not jeopardize your coverage.

XIII. BLANKET WAIVER OF SUBROGATION

The following is added to paragraph **A. Loss Conditions 5. Transfer Of Rights Of Recovery Against Others To Us** as found in **SECTION IV - BUSINESS AUTO CONDITIONS**:

With respect to the insurance provided under **SECTION II – COVERED AUTOS LIABILITY COVERAGE** only, we waive any right of recovery we may have against any person or organization because of payments we make for "bodily injury" or "property damage" caused by an "accident" and resulting from the ownership, maintenance or use of a covered "auto" if such ownership, maintenance or use of a covered "auto" is related to work or ongoing operations performed by you or on your behalf. This provision is also subject to the following:

The work or ongoing operations performed by you or on your behalf have not yet been completed or abandoned and are being performed away from premises you own or rent;

A. You are required under a written contract to waive your rights to recover from that person or organization; and

B. The written contract was executed and in effect before any "accident", injury, loss or demand that would give rise to a claim under this Business Auto Policy.

Under paragraph **A.** above, your work will be deemed completed at the earliest of when all the work called for in your contract has been completed, when all of the work to be done at a job site has been completed if your contract calls for work at more than one job site, or when that part of the work done at a job site has been put to its intended use by any person or organization other than another contractor or subcontractor working on the same project. Work that may need service, maintenance, correction, repair or replacement, but which is otherwise complete, will be treated as completed.

XIV. UNINTENTIONAL FAILURE TO DISCLOSE HAZARDS

The following provision is added to paragraph **A. Loss Conditions** as found in **SECTION IV - BUSINESS AUTO CONDITIONS**:

6. Unintentional Failure To Disclose Hazards

We will not deny coverage under this policy because of an unintentional failure to disclose all exposures or hazards existing on the effective date of the Business Auto Policy or because of an unintentional error or omission in any of the information provided by you and relied upon by us in the issuance of this policy. However:

Includes copyrighted material of Insurance Services Office, Inc., with its permission

a. You must report the undisclosed exposure or hazard, or unintentional error or omission, to us as soon as practicable after its discovery;

b. This provision does not affect our right to collect any additional premium associated with such unintentional failure or our right to cancel or non-renew this policy.

XV. WORLDWIDE HIRED AUTO COVERAGE

Subparagraph **b.(5)** under paragraph **B. General Conditions 7. Policy Period, Coverage Territory** as found in **SECTION IV - BUSINESS AUTO CONDITIONS** is deleted and replaced by the following:

(5) Anywhere in the world if a covered "auto" is leased, hired, rented or borrowed without a driver for a period of 30 days or less;

Includes copyrighted material of Insurance Services Office, Inc., with its permission

WAIVER OF OUR RIGHT TO RECOVER FROM OTHERS ENDORSEMENT

We have the right to recover our payments from anyone liable for an injury covered by this policy. We will not enforce our right against the person or organization named in the Schedule. (This agreement applies only to the extent that you perform work under a written contract that requires you to obtain this agreement from us.)

This agreement shall not operate directly or indirectly to benefit anyone not named in the Schedule.

Schedule*

Any person with whom or organization for which you have agreed in writing to waive your rights to recover

*Information required to complete this schedule, if not shown above, will be shown in the supplemental schedule of the Declarations.

Copyright, 1983 National Council on Compensation Insurance.

INSTRUCTIONS TO BIDDERS

"Owner(s)" shall mean any, all, or a combination of the City of Lincoln, County of Lancaster, Nebraska, Lincoln-Lancaster County Public Building Commission, and/or the West Haymarket Joint Public Agency.

1. BIDDING PROCEDURE

1.1. Bidders shall use the electronic bid system for submitting solicitation responses and must complete all required fields.

1.2. EBID/IONWAVE REGISTRATION

Bidders must be registered on the Owner's Ebid site to submit a response to any solicitation.

1.2.1 To register in Ebid, click on this link: https://col.ionwave.net/Login.aspx

1.2.2. Click on "Supplier Registration" in blue box and follow the instructions to complete the registration.

1.3. Solicitation responses will not be accepted after the closing time and date.

1.4. Bidders should include any deviations of the solicitation documents and the proposed replacement language on company letterhead and attach in the Response Attachment tab in Ebid. Failure to include deviations with the solicitation response will indicate the Bidder agrees to all terms and conditions outlined in the solicitation documents with no exceptions. The Owner reserves the right to accept or reject the deviations according to the best interests of the Owner. Deviations that are not acceptable to the Owner and not negotiable, may result in the Bidder being deemed as "non-responsive" and rejection of the response.

1.5. Bidders shall not attempt to influence or discuss this solicitation with any Owner employee, elected official, agent, or evaluator other than the Purchasing Staff through the award process.

1.5.1 Failure to follow this requirement may result in immediate disqualification of your response.

1.5.2 From the date the solicitation is issued until the award notification is issued, communication is limited to the Purchasing staff. After the award notification is issued, the Bidder may communicate with individuals of the Owner responsible for negotiating the contract.

1.6. The Owner reserves the right to reject a response, withdraw an award notification, or terminate a contract if it is determined there has been a violation of these purchasing procedures.

1.7. If bidding on a construction contract, the Owner's most current Standard Specifications for Municipal Construction shall apply, found at: https://www.lincoln.ne.gov/Owner/Departments/LTU/Transportation/Standards/Standard-Specs.

2. CLARIFICATION OF BIDDING DOCUMENTS

2.1 Bidders shall promptly notify Purchasing staff of any ambiguity, inconsistency, or error which they may discover upon examination of the bidding documents.

2.2 Questions regarding the meaning, interpretation or clarification of any solicitation provision should be submitted through Ebid under the Questions tab. The Owner is not obligated to respond to questions that are received after the Question Cutoff date and time in Ebid.

2.3 Changes made to the bidding documents may be issued electronically via addendum in Ebid. Addendums are issued by Purchasing prior to the closing date for solicitations which modify or interpret the bidding document by addition, deletion, clarification, or correction.

2.4 Oral interpretations or changes to the bidding documents made in any manner other than written form will not be binding on the Owner; and Bidders shall not rely upon such interpretations or changes.

3. INDEPENDENT PRICE DETERMINATION

3.1 By electronically signing and submitting a response, the Bidder agrees the submitted pricing has been arrived at independently, without consultation, communication, or agreement for the purpose of restricting competition, as to any matter relating to such prices with any other Bidder or with any competitor; unless otherwise required by law, the prices which have been submitted in the response have not been knowingly disclosed by the Bidder prior to the solicitation opening directly or indirectly to any other Bidder or to any competitor; no attempt has been made, or will be made, by the Bidder to induce any person or firm to submit, or not to submit, a response for the purpose of restricting competition.

4. BRAND NAMES/ALTERNATES

4.1 If alternates are allowed, it is the Bidder's responsibility to identify any alternate items and prove to the satisfaction of the Owner that said item is equal to, or better than, the product specified.

4.1.1 Alternate items shall be stated in the appropriate space in Ebid Line Item, or if the Ebid Line Item does not contain blanks for alternates, Bidder should attach a statement in Ebid on Company letterhead identifying the manufacturer and brand name of each proposed alternate, plus a complete description of the alternate items including illustrations, performance test data, and any other information necessary for an evaluation.

4.1.2 Bidders must indicate any variances by item number from the bidding document no matter how slight.

4.2 If alternates are not stated in the response, it will be assumed that the item being provided fully complies with the Owner's solicitation documents.

5. DEMONSTRATIONS/SAMPLES

5.1. If requested by the Owner, Bidders shall provide and/or demonstrate the exact item(s) proposed within seven (7) calendar days from receipt of such request.

5.2. Such demonstration(s) can be at the Owner delivery location or a surrounding community.

5.3. If items are small and mailable and the Bidder is proposing an alternate product, the Bidder shall supply a sample of the exact item. Samples will be returned at Bidder's expense after receipt by the Owner of acceptable goods. The Bidder should indicate how samples are to be returned.

5.4. When requested, samples will be furnished at the Bidder's expense prior to the closing of the solicitation, unless another time is specified. Each sample should be labeled clearly, and identify the Bidder's name, the solicitation number and title, item number, and the brand and model number, if applicable. Samples submitted must be the commodities or equipment which would be delivered if awarded the solicitation.

5.5. The Owner reserves the right to request samples even though this may not have been set forth in the solicitation.

5.6. Samples may be destroyed in testing. If a sample is not destroyed in testing and a Bidder wishes to have the sample returned, it will be returned at the Bidder's expense upon request.

5.7. The sample will not be returned until thirty (30) calendar days after any protest or the execution of a contract. The Bidder shall have ten (10) calendar days to arrange for the return of the sample following any of the above dates. If no request from the Bidder is received within the above dates, the Owner reserves the right to use, donate, or surplus the samples in accordance with the Owner's policies.

6. DELIVERY (Non-Construction)

6.1. The Owner reserves the right to cancel orders, or any part thereof, without obligation, if delivery is not made within the specified time(s).

6.2. All prices shall be based upon inside delivery of the equipment/merchandise F.O.B. Destination to the Owner at the location specified by the Owner, with all transportation charges paid.

6.3. At the time of delivery, a designated Owner employee will sign the invoice/packing slip. The signature will only indicate that the order has been received and the items delivered agree with the delivery invoice. This signature does not indicate all items met specifications, were received in good condition and/or that there is not possible hidden damage or shortages.

7. WARRANTIES AND GUARANTEES

7.1. Warranties, guarantees, and maintenance policies should be uploaded in Ebid in the Response Attachments tab.

7.2. Bid specifications shall set forth warranties and guarantees. If not described therein, then as a minimum requirement of the Owner, the Bidder will guarantee in writing that any defective components discovered within a one (1) year period after the date of acceptance of products shall be replaced at no expense to the Owner. Replacement parts of defective components shall be shipped at no cost to the Owner. Shipping costs for defective parts required to be returned to the Bidder shall be paid by the Bidder. Work performed for services shall include a one (1) year warranty beginning upon completion of services. There shall be an additional one (1) year warranty for defects in services rendered beginning on the date that the defects are corrected.

8. BID SECURITY, (if required)

8.1. Bid security, as a guarantee of good faith, in the form of a certified check, cashier's check, or bid bond, may be required to be submitted with the solicitation, as indicated on the solicitation.

8.1.1. Bid security, if required, shall be in the amount specified in the solicitation. The bid security may be scanned and attached to the Response Attachments section of your response in Ebid. The original bid security should then be sent or delivered to the office of the Purchasing Division, 440 S. 8th St., Ste. 200, Lincoln, NE 68508 within three (3) days of closing.

8.1.2. If the bid security is not received in the office of the Purchasing Division as stated above, the Bidder may be determined to be non-responsive.

8.2. If alternates are submitted, only one bid security will be required, provided the bid security is based on the amount of the highest gross bid.

8.3. Such bid security may be returned to the unsuccessful Bidders when the award of the solicitation is made.

8.3.1. Bid security may be returned to the successful Bidder(s) as follows:

8.3.2. For purchase orders, upon the delivery of all equipment or merchandise, and upon final acceptance by the Owner.

8.3.3. For all other contracts, upon approval by the Owner of the executed contract and bonds.

8.4. Owner shall have the right to retain the bid security of Bidders to whom an award is being considered until either:

8.4.1. A contract has been executed and bonds have been furnished.

8.4.2. The specified time has elapsed so the solicitations may be withdrawn.

8.4.3. All responses have been rejected.

8.4.4. Bid security will be forfeited to the Owner as full liquidated damages, but not as a penalty, if the Bidder fails or refuses to enter a contract on forms provided by the Owner, and/or if the Bidder fails to provide sufficient bonds or insurance within the period as established in this bidding document.

9. REFERENCE CHECKS

9.1. The Owner reserves the right to conduct and consider reference checks. By submitting a response to this solicitation, the Bidder grants the Owner the right to contact or arrange a visit in person with any or all the Bidder's clients. Reference checks may be grounds to deem Bidder not responsible, not award, withdraw an award notification, or rescind the award of a contract.

10. SOLICITATION EVALUATION AND AWARD

10.1. The electronic signature shall be considered an offer on the part of the Bidder. The offer shall be deemed accepted upon issuance by the Owner of purchase orders, contract award notifications, or other contract documents appropriate to the work.

10.2. No response shall be modified or withdrawn for a period of ninety (90) calendar days after closing date and time.

10.3. In case of a discrepancy between the unit prices and their extensions, the unit prices shall govern.

10.4. The solicitation will be awarded to the lowest responsive, responsible Bidder whose offer will be most advantageous to the Owner, and as the Owner deems will best serve the requirements and interests of the Owner.

10.5. The Owner reserves the right to accept or reject any or all responses; to request rebids; to award item-by-item, with or without alternates, by groups, or "lump sum"; to waive minor irregularities; request a best and final offer (BAFO); such as shall best serve the requirements and interests of the Owner.

10.6. To determine if the Bidder has the experience, qualifications, resources, and necessary attributes to provide the quality workmanship, materials and management required by the plans and specifications, the Bidder may be required to complete and submit additional information as deemed necessary by the Owner. Failure to provide the information requested to make this determination may be grounds for a declaration of non-responsive with respect to the Bidder.

10.7. The Owner reserves the right to reject irregular responses that contain unauthorized additions, conditions, alternate responses, or irregularities that make the solicitation incomplete, indefinite or ambiguous.

10.8. If allowed, any governmental agency may piggyback on any purchase order or contract established from this solicitation.

11. EXECUTION OF AGREEMENT

11.1. Depending on the type of service or commodity provided, one of the following methods will be employed.

11.1.1. **PURCHASE ORDER**

A copy of the Bidder's response (or referenced solicitation number) attached and that the same, in all particulars, becomes the contract between the parties hereto that both parties thereby accept and agree to the terms and conditions of said solicitation documents.

11.1.2. **CONTRACT**

11.1.2.1 Owner will prepare and furnish a Contract to the successful Bidder.

11.1.2.2 The successful Bidder shall provide proof of insurance as evidenced by a Certificate of Insurance, along with endorsements and waivers (as required), surety bonds properly executed (as required), and Contract signed and dated.

11.1.2.3 The prepared documents should be returned to the Purchasing Office within 10 days (unless otherwise noted).

11.1.2.4 The Owner will sign and date the Contract when (a), (b), and (c) are completed.

11.1.2.5 Upon approval and signature, the Owner will return one electronic copy to the successful Bidder.

12. LAWS

12.1. The laws of the State of Nebraska shall govern the rights, obligations, and remedies of the parties under this solicitation and any contract reached as a result of this process.

12.2. Bidder agrees to abide by all applicable local, state, and federal laws and regulations, including those concerning the handling and disclosure of private and confidential information from individuals and corporations as to inventions, copyrights, patents, and patent rights.

12.3. If there are any conflicts or inconsistencies between the Bidder's documents and the Owner's documents, the Owner's documents shall control.

13. TAX ASSESSMENT

13.1. Any solicitation for public improvement shall comply with Nebraska Revised Statutes Sections 77-1323 and 77-1324. In that regard, every person, partnership, limited liability company, association or corporation furnishing labor or material in the repair, alteration, improvement, erection, or construction of any public improvement shall sign a certified statement which will accompany the contract. The certified statement shall state that all equipment to be used on the project, except that acquired since the assessment date, has been assessed for taxation for the current year, giving the county where assessed.

14. EQUAL OPPORTUNITY

14.1. The Owner requires compliance with all federal, state, and local laws, rules, and regulations regarding equal opportunity for all Bidders and encourages minority businesses, women's businesses, and locally owned business enterprises to participate in our bidding process.

15. LIVING WAGE, (if applicable)

15.1. The Bidder shall be responsible for determining whether it is subject to the Living Wage ordinance in the event it is awarded the contract.

15.2. If the contract is subject to the Owner's Living Wage pursuant to Section 2.81 of the Lincoln Municipal Code, the Bidder agrees to pay all employees employed in the performance of this contract, a base wage of not less than the Owner's Living Wage. This wage is subject to change every July.

16. INSURANCE

16.1. Bidders shall take special notice of the insurance provisions required for Owner contracts (if applicable, see *Insurance Requirements in the Attachments tab in Ebid*).

17. TAXES AND TAX EXEMPTION CERTIFICATE

17.1. The Owner is generally exempt from any taxes imposed by the state or federal government. A Tax Exemption Certificate will be provided as applicable.

17.2. The Water Division of the City of Lincoln is taxable per Reg. 066.14A and no exemption certificate will be issued.

18. AUDIT

18.1. All parties of any Owner agreement shall be subject to audit and shall make available to a contract auditor, as defined therein, copies of all financial and performance-related records and materials germane to the contract/order, as allowed by law.

19. E-VERIFY

19.1. In accordance with Neb. Rev. Stat. 4-108 through 4-114, the awarded Bidder agrees to register with and use a federal immigration verification system, to determine the work eligibility status of new employees performing services within the state of Nebraska. A federal immigration verification system means the electronic verification of the work authorization program of the Illegal Immigration Reform and Immigrant Responsibility Act of 1996, 8 U.S.C. 1324 a, otherwise known as the E-Verify Program, or an equivalent federal program designated by the United States Department of Homeland Security or other federal agency authorized to verify the work eligibility status of a newly hired employee pursuant to the Immigration Reform and Control Act of 1986. The winning Bidder shall not discriminate against any employee or applicant for employment to be employed in the performance of this section pursuant to the requirements of state law and 8 U.S.C.A 1324b. The winning Bidder shall require any subcontractor to comply with the provisions of this section. For information on the E-Verify Program, go to www.uscis.gov/everify.

WH 26-13 Introduce: 4-23-26

RESOLUTION NO.

BE IT RESOLVED by the Board of Representatives of the West Haymarket Joint Public Agency:

That the Chairperson and/or Purchasing Agent of the West Haymarket Joint Public Agency is hereby authorized to issue a Purchase Order, to the lowest, responsive, responsible bidder, TriMark Hockenbergs, for an amount not to exceed $47,695.16, for gas fryer units for the Pinnacle Bank Arena, and the Chairperson is authorized to approve and execute minor amendments and change orders thereto.

Adopted this _____ day of April, 2026.

Introduced by:

_____

Approved as to Form & Legality:

_____
Legal Counsel for
West Haymarket Joint Public Agency

West Haymarket Joint Public Agency
Board of Representatives

_____
Leirion Gaylor Baird

_____
Tim Clare

_____
Tom Beckius

TriMark
Foodservice Equipment, Supplies and Design

Quote

02/27/2026

To:
Pinnacle Bank Arena
Glenn Bateman
400 Pinnacle Arena Dr
Lincoln, NE 68508

Project:
Pinnacle Bank Arena-Fryer System

From:
TriMark Hockenbergs
Bryce Gillett
14063 Cornhusker Rd
Omaha, NE 68138
402-339-8900
4023109340 0000 (Contact)

Project Code: 84056

Job Reference Number: 77623

Prices may not reflect applicable tariffs, duties, import fees, taxes, or other governmental charges. TriMark reserves the right to correct or adjust quoted prices at any time due to tariffs, market fluctuations, supply chain disruptions, third-party supplier cost changes, general contractor delays, or any other factors outside of TriMark's control. TriMark will use commercially reasonable efforts to hold pricing for seven calendar days from the date of the quote; however, all pricing remains subject to correction or adjustment as set forth above, including during the seven-day hold period.

This quote is good thru June 30th, 2026.

Item	Qty	Description	Sell	Sell Total
1	2 ea	**GAS FRYER**	$21,862.25	$43,724.50
		Frymaster/Dean Model No. FPPH255 Frymaster® Fryer Battery, gas, hi-efficiency, (2) 50 lb. capacity each, built-in filtration, open frypot design, automatic melt cycle, boil-out temp control, electronic ignition, center mounted RTD, 1° compensating temperature probe, includes: rack-type basket support, basket hanger & twin baskets, stainless steel frypots, doors & cabinet, casters, 160,000 BTU, CSA Star, CSA Flame, cCSAus, CE, NSF, ENERGY STAR® **STATE FAIR**		
	1 ea	NOTE: Gas fryers CANNOT be curb mounted		
	1 ea	Natural gas (If elevation is between 5,000-10,000 ft, specify the elevation level. Fryer may not perform at optimum levels above this elevation.)		
	2 ea	Full frypot, standard		
	2 ea	CM3.5 Controller, standard		
	2 ea	120v/60/1-ph, 9 amps, standard (controller/filter)		

Item	Qty	Description	Sell	Sell Total
	2 ea	Spreader cabinet, stainless steel door and sides, free standing or in battery (MUST specify at time of order), with legs standard	$833.30	$1,666.60
	2 ea	12"W X 20"D Cutout in top		
	2 ea	FWH-1 Frymaster®/Dean® Food Warmer & Holding Station, ceramic heating element with wire guard, radiant heat, includes; heat lamp, cord & plug, 12 x 20 x 2-1/2" stainless steel cafeteria-style pan & screen (additional cabinet required), NSF, cULus	$1,035.02	$2,070.04
	1 ea	120v/60/1-ph, 6.3 amps, standard, for heat lamp		
	2 ea	Casters, set of 4 (2) with brakes, in lieu of std. legs	$117.01	$234.02
	2 ea	6" casters (set of 4), standard		
	2 ea	Start-Up Program, included at Customer's request on all fryers with built-in filter		
	1 ea	Start-Up Program includes gas pressure check, gas plumbing size, wiring inspection, proper basket lift operation, cleaning of all frypots with damp rag/paper towels, controller check & programming demonstration, inspection of vent hood & demonstration of the proper use & care of the filter sys (if all is applicable)		
			ITEM TOTAL:	**$47,695.16**
		Total		$47,695.16

Standard Contract Terms & Conditions

All quotations are subject to approval by the company. The above listed prices shall be firm for 7 days. Prices shown in this quotation are for specific items, quantities, and lead times indicated.

Prices are subject to change if all of the items are not ordered, if quantities ordered differ, or if adequate lead-time is not allowed.

The prices shown in this quotation DO/DO NOT include freight charges which will be added to our invoice. This quotation does not include any fees for local permits or licenses that may be required by your municipality or state.

The prices shown in this quotation DO/DO NOT include applicable taxes, which will be added to our invoice unless a valid certificate of exemption is provided by you. Please be advised that, under state law, some items may still be taxable. In states where TriMark Hockenbergs is not registered to collect Sales Tax, it is the buyer's responsibility to pay any applicable Use Tax due to the state.

Payment terms are 50% due at time of order, 45% due prior to delivery and 5% due based on customer terms. We impose a surcharge on credit cards that is not greater than our cost of acceptance. Please be advised that a 1.5% per month FINANCE CHARGE will begin to accrue upon expiration of the above payment terms. This will amount to 18% annually.

In the event that the delivery date is delayed by you, or any party other than TriMark Hockenbergs, for more than two (2) weeks from the agreed upon date, you hereby agree that TriMark Hockenbergs will bill you for "stored materials". You also agree that any payments originally due "upon delivery" will become immediately due and payable. For valuable consideration, receipt of which is hereby acknowledged, you hereby grant to TriMark Hockenbergs a security

Initial: _____

interest in the equipment described herein and any and all additions and accessories thereto, to secure payment of the total debt and any and all other obligations to TriMark Hockenbergs under this agreement. The security interest created hereby shall terminate when obligations have been paid in full.

You hereby authorize TriMark Hockenbergs to file any UCC financing statement that it deems necessary to perfect its security interest.

On capital purchases, we require a perfected security interest in the goods until they have been paid for in full. TriMark Hockenbergs will handle all of the necessary U.C.C. filings and pay for any costs associated with these filings. Upon failure of you to promptly pay or perform any of the obligations or any covenants contained or referred to herein, TriMark Hockenbergs may, at its option, declare all of the obligations immediately due and payable and then shall have all of the remedies of a secured party under the Uniform Commercial Code of the state where the equipment is located. Such remedies shall include, but are not limited to, the right to take possession of the equipment. Expenses related to repossessing, holding, repairing, or reselling the equipment, including any collection costs, reasonable attorney's fees and legal expenses, shall be the responsibility of the buyer.

No warranty of merchantability or fitness for a particular purpose, or other warranty, express, implied or statutory, nor any affirmation of fact or promise is made by Seller with respect to the goods which are sold pursuant hereto.

This Quote shall be subject to TriMark's Terms of Sale https://www.trimarkusa.com/SiteMedia/SiteResources/Terms/TriMark-Terms-and-Conditions-of-Sale.pdf , which are incorporated herein by reference and shall govern. The parties specifically agree that no signature shall be required in order for this Quote or its applicable terms and conditions to be deemed legally binding and enforceable on Customer where the intent to be so bound can be inferred (including by acceptance or retention of products or services), notwithstanding contrary requirements under any law.

Any tax or similar fees shown in this Quote are an estimate only.

Acceptance _____ Date _____

Print Name_____

Company Name _____

Acceptance: _____ Date: _____

Printed Name: _____

Project Grand Total: $47,695.16

Initial: _____

WH 26-14 Introduce: 4-23-26

RESOLUTION NO.

BE IT RESOLVED by the Board of Representatives of the West Haymarket Joint Public Agency:

That the Chairperson and/or Purchasing Agent of the West Haymarket Joint Public Agency is hereby authorized to issue a Purchase Order, to the lowest, responsive, responsible bidder, TriMark Hockenbergs, for an amount not to exceed $24,352.54, for a cube-style ice maker for the Pinnacle Bank Arena, and the Chairperson is authorized to approve and execute minor amendments and change orders thereto.

Adopted this _____ day of April, 2026.

Introduced by:

_____

Approved as to Form & Legality:

_____
Legal Counsel for
West Haymarket Joint Public Agency

West Haymarket Joint Public Agency
Board of Representatives

_____
Leirion Gaylor Baird

_____
Tim Clare

_____
Tom Beckius

TriMark
Foodservice Equipment, Supplies and Design

Quote

02/27/2026

To:
Pinnacle Bank Arena
Glenn Bateman
400 Pinnacle Arena Dr
Lincoln, NE 68508

Project:
Pinnacle Bank Arena- Ice Maker
400 Pinnacle Arena Dr
Lincoln, NE 68508

From:
TriMark Hockenbergs
Bryce Gillett
14063 Cornhusker Rd
Omaha, NE 68138
402-339-8900
4023109340 0000 (Contact)

Project Code: 75053

Job Reference Number: 68662

Prices may not reflect applicable tariffs, duties, import fees, taxes, or other governmental charges. TriMark reserves the right to correct or adjust quoted prices at any time due to tariffs, market fluctuations, supply chain disruptions, third-party supplier cost changes, general contractor delays, or any other factors outside of TriMark's control. TriMark will use commercially reasonable efforts to hold pricing for seven calendar days from the date of the quote; however, all pricing remains subject to correction or adjustment as set forth above, including during the seven-day hold period.

This quote is good through June 30th, 2026

Item	Qty	Description	Sell	Sell Total
1	2 ea	**ICE MAKER, CUBE-STYLE**	$8,357.14	$16,714.28
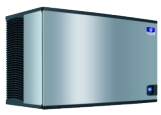		Manitowoc Model No. IYT1500A Indigo NXT™ Series Ice Maker, cube-style, air-cooled, self-contained condenser, 48"W x 24"D x 29-1/2"H, production capacity up to 1660 lb/24 hours at 70°/50° (1412 lb AHRI certified at 90°/70°), easyTouch display with 13 different language options, date/time stamp display, automatic reminder/alert icon, one touch asset information, automatic detection of accessories, continuous operating status, programmable production options (time, weight, day or night), one touch cleaning with displayed instructions, Alpha-San anti-microbial protection, acoustical ice sensing probe, self-diagnostic technology, DuraTech™ exterior, half-dice size cubes, R410 refrigerant, NSF, cULus, CE		
	2 ea	WARRANTY-ICE-SC 3 year parts & labor (Machine), 5 year parts & labor (Evaporator), 5 year parts & 3 years labor (Compressor), standard		
	2 ea	(-261A) 208-230v/60/1-ph, 18.5 amps		
	2 ea	AR-40000-P Arctic Pure® Plus Primary Water Filter Assembly,	$427.63	$855.26

Initial: _____

Item	Qty	Description	Sell	Sell Total
		includes head, shroud, hardware, mounting assembly, & (1) filter cartridge, 40,000 gallon capacity, 1,001-2,500 lbs./ice per day		
	2 ea	WARRANTY-ARCPURE 3 year parts & labor warranty on cap, housing, hardware, & mounting assembly (does not refer to filter cartridge), standard		
			ITEM TOTAL:	**$17,569.54**
2	2 ea	**ICE BIN FOR ICE MACHINES** Manitowoc Model No. D970 Ice Bin, 48"W x 34"D x 50"H, with side-hinged front-opening door, side grips, 882 lbs. application capacity, AHRI certified 29.7 cu. ft., for top-mounted ice maker, Duratech exterior, NSF	$2,391.50	$4,783.00
	2 ea	WARRANTY-BIN/DISP 3 year parts & labor warranty, standard		
	2 ea	Legs, 6" adjustable stainless steel, standard		
			ITEM TOTAL:	**$4,783.00**
3	2 ea	**DELIVERY/INSTALLATION** Hockenbergs Model No. INSTALLATION Deliver to PBA, uncrate and set in place. Includes disconnect and removal and disposal of existing ice maker. Includes installation and start up of new filtration system and new ice maker to be installed on new bin.	$1,000.00	$2,000.00
			ITEM TOTAL:	**$2,000.00**
			Total	$24,352.54

Standard Contract Terms & Conditions

All quotations are subject to approval by the company. The above listed prices shall be firm for 7 days. Prices shown in this quotation are for specific items, quantities, and lead times indicated.

Prices are subject to change if all of the items are not ordered, if quantities ordered differ, or if adequate lead-time is not allowed.

The prices shown in this quotation DO/DO NOT include freight charges which will be added to our invoice. This quotation does not include any fees for local permits or licenses that may be required by your municipality or state.

The prices shown in this quotation DO/DO NOT include applicable taxes, which will be added to our invoice unless a valid certificate of exemption is provided by you. Please be advised that, under state law, some items may still be taxable. In states where TriMark Hockenbergs is not registered to collect Sales Tax, it is the buyer's responsibility to pay any applicable Use Tax due to the state.

Payment terms are 50% due at time of order, 45% due prior to delivery and 5% due based on customer terms. We impose a surcharge on credit cards that is not greater than our cost of acceptance. Please be advised that a 1.5% per month FINANCE CHARGE will begin to accrue upon expiration of the above payment terms. This will amount to 18% annually.

Initial: _____

In the event that the delivery date is delayed by you, or any party other than TriMark Hockenbergs, for more than two (2) weeks from the agreed upon date, you hereby agree that TriMark Hockenbergs will bill you for "stored materials". You also agree that any payments originally due "upon delivery" will become immediately due and payable. For valuable consideration, receipt of which is hereby acknowledged, you hereby grant to TriMark Hockenbergs a security interest in the equipment described herein and any and all additions and accessories thereto, to secure payment of the total debt and any and all other obligations to TriMark Hockenbergs under this agreement. The security interest created hereby shall terminate when obligations have been paid in full.

You hereby authorize TriMark Hockenbergs to file any UCC financing statement that it deems necessary to perfect its security interest.

On capital purchases, we require a perfected security interest in the goods until they have been paid for in full. TriMark Hockenbergs will handle all of the necessary U.C.C. filings and pay for any costs associated with these filings. Upon failure of you to promptly pay or perform any of the obligations or any covenants contained or referred to herein, TriMark Hockenbergs may, at its option, declare all of the obligations immediately due and payable and then shall have all of the remedies of a secured party under the Uniform Commercial Code of the state where the equipment is located. Such remedies shall include, but are not limited to, the right to take possession of the equipment. Expenses related to repossessing, holding, repairing, or reselling the equipment, including any collection costs, reasonable attorney's fees and legal expenses, shall be the responsibility of the buyer.

No warranty of merchantability or fitness for a particular purpose, or other warranty, express, implied or statutory, nor any affirmation of fact or promise is made by Seller with respect to the goods which are sold pursuant hereto.

This Quote shall be subject to TriMark's Terms of Sale https://www.trimarkusa.com/SiteMedia/SiteResources/Terms/TriMark-Terms-and-Conditions-of-Sale.pdf , which are incorporated herein by reference and shall govern. The parties specifically agree that no signature shall be required in order for this Quote or its applicable terms and conditions to be deemed legally binding and enforceable on Customer where the intent to be so bound can be inferred (including by acceptance or retention of products or services), notwithstanding contrary requirements under any law.

Any tax or similar fees shown in this Quote are an estimate only.

Acceptance _____ Date _____

Print Name_____

Company Name _____

Acceptance: _____ Date: _____

Printed Name: _____

Project Grand Total: $24,352.54

WH 26-15 Introduce: 4-23-26

RESOLUTION NO.

BE IT RESOLVED by the Board of Representatives of the West Haymarket Joint Public Agency:

That the Chairperson of the West Haymarket Joint Public Agency is hereby authorized to enter into an Agreement with Prairie Mechanical Corporation, for HVAC and HVAC Controls Services, for a total amount not to exceed $11,949.50, and an Agreement with WCR for materials, parts, and labor to replace seven hot water valves at the Pinnacle Bank Arena, for a total amount not to exceed $39,296.00, bringing the total project costs to $51,245.50, and the Chairperson of the West Haymarket Joint Public Agency Board of Representatives is hereby authorized to execute said Agreements.

Adopted this _____ day of April, 2026.

Introduced by:

_____

Approved as to Form & Legality:

West Haymarket Joint Public Agency
Board of Representatives

_____
Legal Counsel for
West Haymarket Joint Public Agency

_____
Leirion Gaylor Baird

_____
Tim Clare

_____
Tom Beckius

CITY OF LINCOLN, LANCASTER COUNTY, CITY OF LINCOLN-LANCASTER COUNTY PUBLIC BUILDING COMMISSION

Attachment 1

UNIT PRICE QUOTATION

This Document Is Required For All Unit Price Projects

HVAC and HVAC Controls Services, ~~Bid No. 23-025~~

Date: 3-27-2026

TO DEPARTMENT/AGENCY REPRESENTATIVE:

FROM (CONTRACTOR): Prairie Mechanical Corporation **AWARD LEVEL: 3**

PROJECT DESCRIPTION: Repalce 7 valves on the hot water side. All of them are by the heat exchangers

Fill in the following Tables in the areas as shown. If an item does not apply, please do not make an entry in that column.

TIME OF COMPLETION

Estimated Start Date	TBA
Number of days to complete	2

LABOR COST TABLE • HVAC

CONTRACTOR	per hr. rate	Estimated # Hours	Estimated Total
Supervisor, Su erintendent, or Foreman	$114.00		0
Master Mechanic	$114.00	30	3420
Journeyman	$114.00		0
Apprentice	$98.00		0
Laborer	$98.00		0
Emergency Services	$171.00		0
TOTAL LABOR		30	3420

LABOR COST TABLE - HVAC CONTROL SERVICES

CONTRACTOR	per hr. rate
Supervisor, Superintendent, or Foreman	No Bid
Master Mechanic	No Bid
Journeyman	No Bid
Apprentice	No Bid
Laborer	No Bid
Emergency Services	No Bid
TOTAL LABOR	No Bid

EQUIPMENT AND MATERIAL COSTS

ITEM	COST	% of Markup	Estimate Total

Total Equipment Costs	$ 450.00	15%	$ 517.50
Total Materials Cost	$ 6,966.96	15%	$ 8,012.00
Total Shipping/Freight Cost		15%	$ -

SUBCONTRACTORS COSTS

SUB-CONTRACTOR (NAME)	COST	% of Markup	Estimated Total
Sub No. 1		10%	$ -
Sub No. 2		10%	$ -
TOTAL ESTIMATED COST-- NOT TO EXCEED:			$ 11,949.50

Revised 1/11/2024

Seward
836 Aspen Street
Seward, NE 68434

Quote

Quote Number: 0133546
Quote Date: 1/5/2026

Salesperson: HMM
Customer Number: 18-0002444
Proposal Valid for 30 Days:

Quoted To:
PINNACLE BANK ARENA
400 Pinnacle Arena Dr
Lincoln, NE 68508-3823

Confirm To:
TANNER BAKER

Ship To:
PINNACLE BANK ARENA
400 Pinnacle Arena Dr
Lincoln, NE 68508-3823
UNITED STATES
Telephone: (402) 904-5670
Ext:

Customer P.O.	Ship VIA	EX Works	Terms
	XPO PP/ADD	SEWARD	30 Days

Item Code	Unit	Ordered	Shipped	Back Order	Price	Amount
MATERIALS						
3095-81-4-00-03-86		TL10P HT 316L 0.5 03				
Whse: NEB	EACH	252.000	0.000	0.000	106.00	26,712.00
2) DETAILED AS AN END						
3094-81-4-00-03-86		TL10P LT 316L 0.5 03				
Whse: NEB	EACH	36.000	0.000	0.000	106.00	3,816.00
3095-81-4-00-16-86		TL10P HT 316L 0.5 16				
Whse: NEB	EACH	2.000	0.000	0.000	106.00	212.00
2614190-84		TL10P HP CLIP FLOW FDA-NBR				
Whse: NEB	EACH	294.000	0.000	0.000	0.00	0.00
4003-068024033		SHARKCRATE 2 OD 68 X 24 X 33				
Whse: NEB	EACH	4.000	0.000	0.000	539.00	2,156.00
LEAD TIME IS 5-7 WEEKS ARO						
LABOR						
/475		NEW PLATE GASKETING				
	EACH	290.000	0.000	0.000	10.00	2,900.00
/495		ONSITE LABOR CHARGE				
		1.000	0.000	0.000	3,500.00	3,500.00
THIS IS AN ESTIMATED ONSITE CHARGE FOR 2 TECHS TO COME ONSITE AND OPEN,SWAP, AND CLOSE 1) TL10P UNIT.						

All quotes are subject to material availability.
Quoted plate prices are based on today's public listed stainless steel surcharges . Any increase in surcharges at the time of delivery will be an additional charge.

NOTES:

We appreciate the opportunity to serve you. If at anytime you have concerns or you are dissatisfied with our level of service, please communicate this to us at once. Our mission is to set the standard for premier service in the heat exchanger industry. With your help we are confident we will accomplish our mission.

Terms of Sale found at www.WCRhx.com

Thank You,
KARI PURTLE

Net Order	$39,296.00
Freight	$0.00
Sales Tax	$0.00
Total: (USD)	**$39,296.00**