DECK DETAIL

NOTES: *IF DECK IS NOT MORE THAN 30" ABOVE GRADE, GUARDRAILS ARE NOT REQUIRED
*INDICATE SPECIES AND GRADE OF LUMBER _____
*DECK IS _____ " ABOVE GRADE

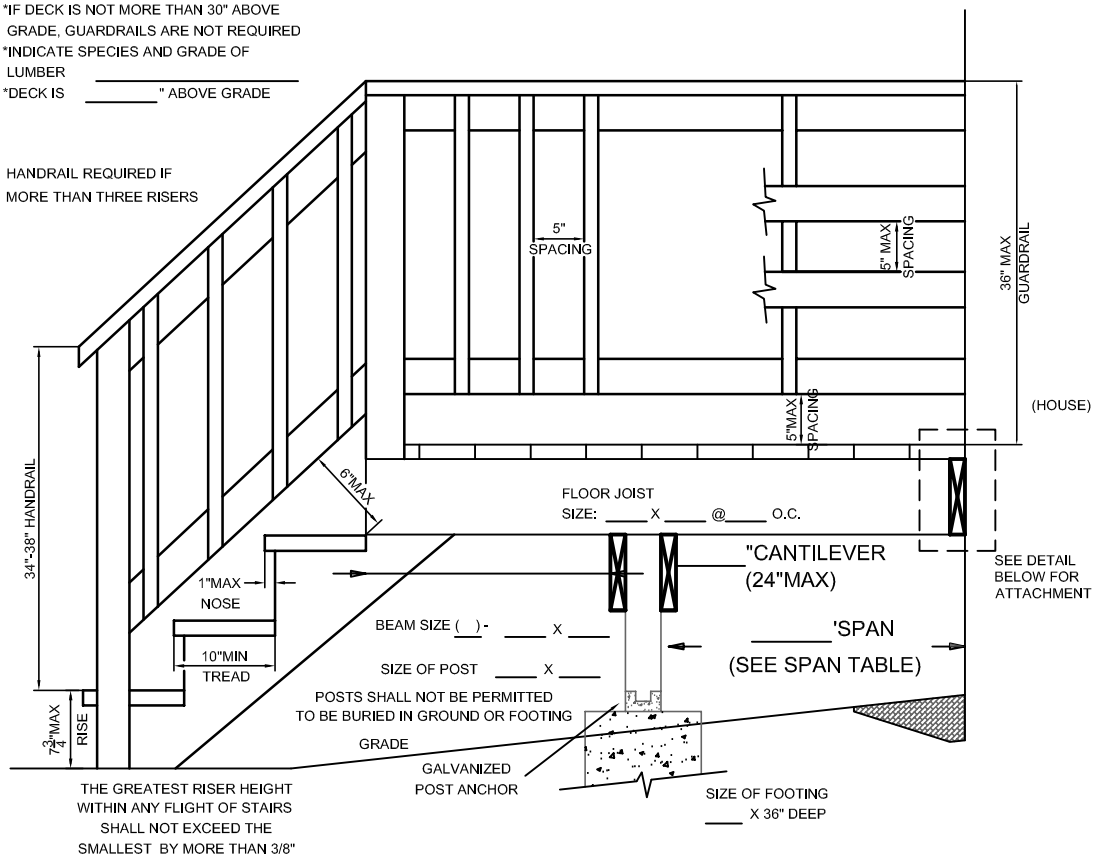

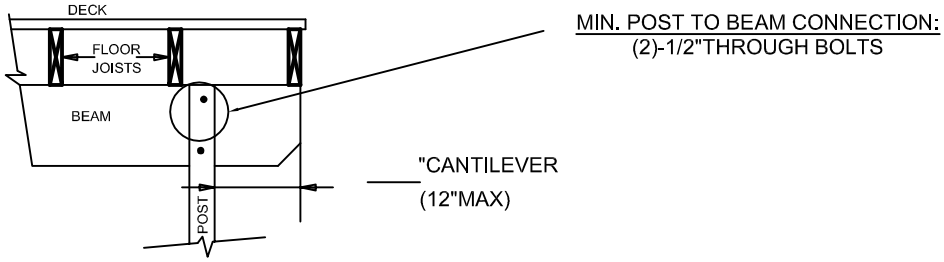

ATTACHING DECK LEDGER TO BAND JOIST OVER STRUCTURAL SHEATHING

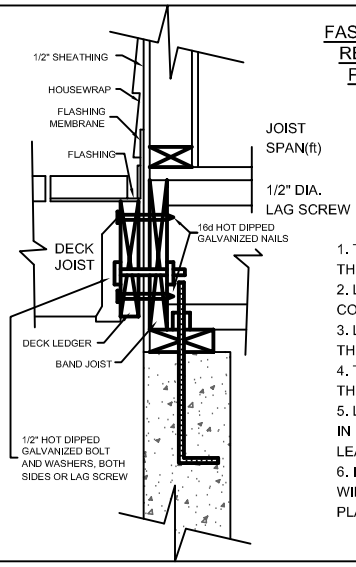

FASTENER SPACING RECOMMENDATIONS FOR RESIDENTIAL DECK LEDGERS WHEN USING PRESSURE TREATED SYP SAWN LUMBER

JOIST SPAN(ft)	UP TO 7'	7'-1" TO 14'	14'-1" TO 18'
	1 ROW @ 16" O.C.	2 ROWS @ 16" O.C.	2 ROWS @ 12" O.C.

1. THE TIP OF THE LAG SCREW SHALL FULLY EXTEND BEYOND THE INSIDE FACE OF THE RIM BOARD.
2. LEDGERS SHALL BE FLASHED TO PREVENT WATER FROM CONTACTING THE HOUSE RIM JOIST.
3. LAG SCREWS AND BOLTS NEED TO BE STAGGERED ALONG THE LENGTH OF THE LEDGER.
4. THE WIDTH OF THE LEDGER SHALL NOT BE LESS THAN THE WIDTH OF THE JOISTS.
5. LAG SCREWS AND BOLTS SHALL BE PLACED AT LEAST 2" IN FROM THE BOTTOM AND TOP OF THE LEDGER AND AT LEAST 2" IN FROM THE ENDS.
6. IF ENGINEERED BAND JOIST IS USED THEN ENGINEERING WILL BE REQUIRED. EXCEPTION: IF 1-1/2" SAWN LUMBER IS PLACED ON BASEMENT SIDE OF BAND JOIST.

SITE PLAN REQUIREMENTS

1. PROPERTY ADDRESS & LEGAL DESCRIPTION. 2. ADD PROPERTY DIMENSIONS. 3. SHOW ALL EASEMENTS. 4. LOCATION OF ALL PERMANENT STRUCTURES. 5. LOCATION OF DECK: DISTANCE TO PROPERTY LINES. 6. SHOW MET FOOTING LOCATIONS. 7. INDICATE PIER FOOTING DIAMETER AND DEPTH. 8. INDICATE WHETHER A SPA OR HOT TUB WILL BE PLACED ON DECK. 9. DECK CAN NOT BE SUPPORTED OFF OF HOUSE CANTILEVER